(12) INTERNATIONAL APPLICATION PUBLISHED UNDER THE PATENT COOPERATION TREATY (PCT)

(19) World Intellectual Property Organization
International Bureau

(43) International Publication Date
23 April 2009 (23.04.2009)

PCT

(10) International Publication Number
WO 2009/050475 A1

(51) International Patent Classification:
G07F 17/32 (2006.01)

(21) International Application Number:
PCT/GB2008/003517

(22) International Filing Date: 15 October 2008 (15.10.2008)

(25) Filing Language: English

(26) Publication Language: English

(30) Priority Data:
0720338.3 17 October 2007 (17.10.2007) GB

(71) Applicant *(for all designated States except US)*: **THE NTF GROUP PTY LTD** [AU/AU]; King St Wharf, Suite 318, 5 Lime Street, Sydney NSW 2000 (AU).

(71) Applicant *(for MG only)*: **JOHNSON, Terence, Leslie** [GB/GB]; 90 Long Acre, London WC2E 9RA (GB).

(72) Inventor; and

(75) Inventor/Applicant *(for US only)*: **NELSON, Joan** [AU/AU]; King St Wharf, Suite 318, 5 Lime Street, Sydney NSW 2000 (AU).

(74) Agent: **JOHNSON, Terence, Leslie**; Marks & Clerk, 90 Long Acre, London WC2E 9RA (GB).

(81) Designated States *(unless otherwise indicated, for every kind of national protection available)*: AE, AG, AL, AM, AO, AT, AU, AZ, BA, BB, BG, BH, BR, BW, BY, BZ, CA, CH, CN, CO, CR, CU, CZ, DE, DK, DM, DO, DZ, EC, EE, EG, ES, FI, GB, GD, GE, GH, GM, GT, HN, HR, HU, ID, IL, IN, IS, JP, KE, KG, KM, KN, KP, KR, KZ, LA, LC, LK, LR, LS, LT, LU, LY, MA, MD, ME, MG, MK, MN, MW, MX, MY, MZ, NA, NG, NI, NO, NZ, OM, PG, PH, PL, PT, RO, RS, RU, SC, SD, SE, SG, SK, SL, SM, ST, SV, SY, TJ, TM, TN, TR, TT, TZ, UA, UG, US, UZ, VC, VN, ZA, ZM, ZW.

(84) Designated States *(unless otherwise indicated, for every kind of regional protection available)*: ARIPO (BW, GH, GM, KE, LS, MW, MZ, NA, SD, SL, SZ, TZ, UG, ZM, ZW), Eurasian (AM, AZ, BY, KG, KZ, MD, RU, TJ, TM), European (AT, BE, BG, CH, CY, CZ, DE, DK, EE, ES, FI, FR, GB, GR, HR, HU, IE, IS, IT, LT, LU, LV, MC, MT, NL, NO, PL, PT, RO, SE, SI, SK, TR), OAPI (BF, BJ, CF, CG, CI, CM, GA, GN, GQ, GW, ML, MR, NE, SN, TD, TG).

Published:
— *with international search report*

(54) Title: A GAMING SYSTEM AND METHOD

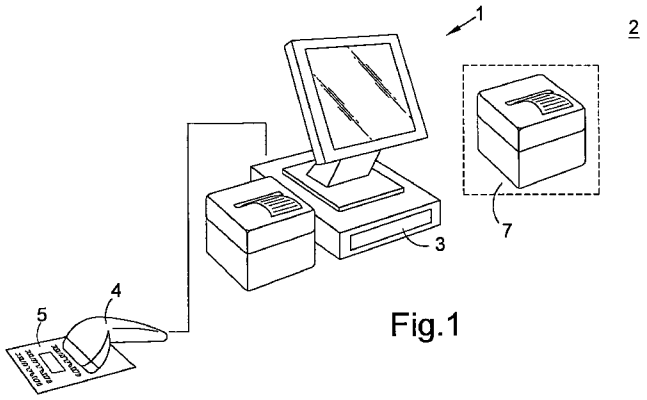

Fig.1

(57) Abstract: A computer implemented system for providing customers of retail outlet (s) with a transaction based gaming reward. There is a point of sale at a retail outlet (2) such as a supermarket check-out. There is a POS device (3) which runs POS software which also runs the application for production of a ticket, coupon or receipt with a reward to be offered to the customer making the transaction. To this end, the POS device (3) and its software stores text and image (s) required for production of a required reward via the ticket, coupon or receipt. The application software for the reward may control what is displayed on the pole display. There is a scanner (4) at the point of sale 1 which scans the or each item (5) purchased, which scanner (4) triggers the application to inspect the text being sent to the POS screen (6). The point of sale (1) also includes a printer (7) which is a dedicated printer device which prints out a ticket, coupon or receipt bearing the reward offered to the customer, which reward is determined by the application and which can be triggered to activate the dedicated printer (7) to print out the ticket, coupon or receipt at any time during the POS transaction. The reward can be offered at a first characteristic of a transaction, all characteristics of a transaction, or at any number of characteristics between one and all characteristics.

WO 2009/050475 A1