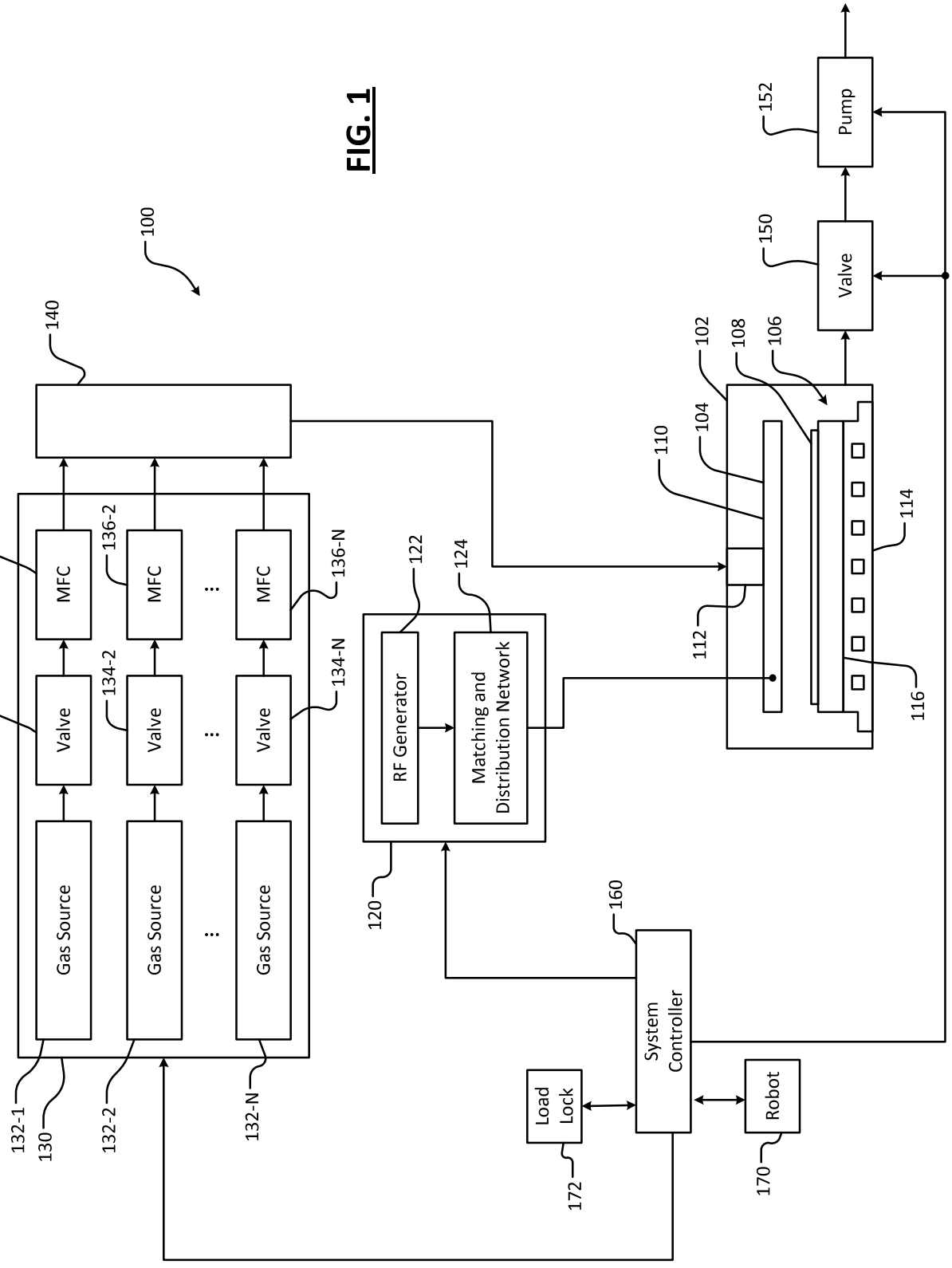
100
140
136-1
136-2
136-N
MFC
MFC
MFC
134-1
134-2
134-N
Valve
Valve
Valve
Gas Source
Gas Source
Gas Source
132-1
130
132-2
132-N
122
124
RF Generator
Matching and Distribution Network
120
160
System Controller
Load Lock
172
Robot
170
102
108
106
104
110
112
114
116
150
Valve
152
Pump

FIG. 1

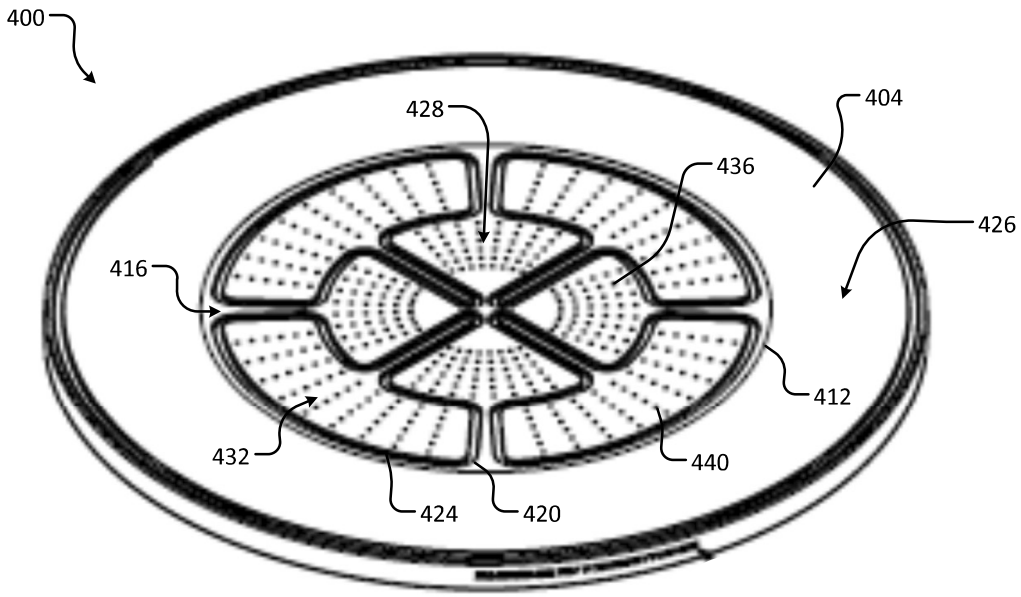

FIG. 4A

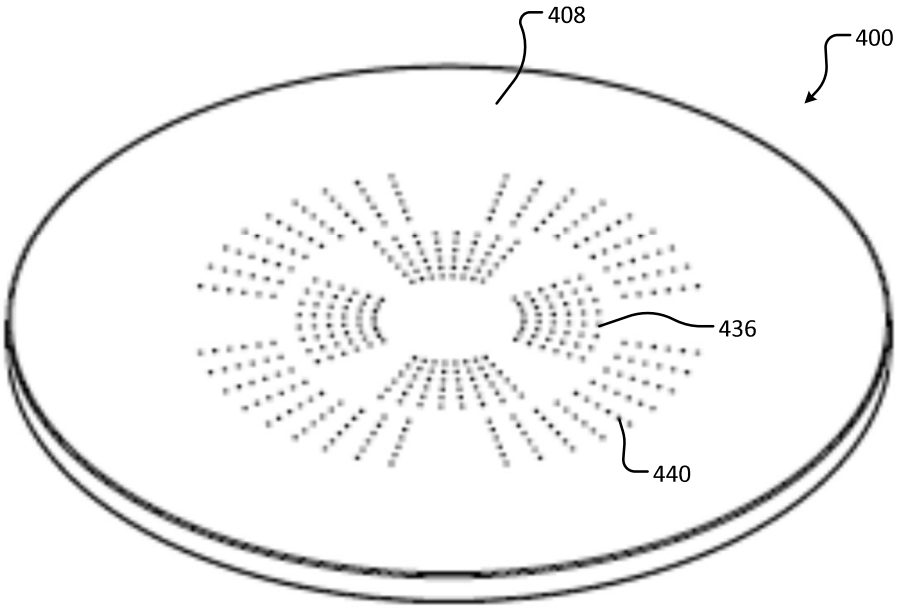

FIG. 4B