(12) INTERNATIONAL APPLICATION PUBLISHED UNDER THE PATENT COOPERATION TREATY (PCT)

(19) World Intellectual Property Organization
International Bureau

(43) International Publication Date
7 May 2009 (07.05.2009)

PCT

(10) International Publication Number
WO 2009/059022 A1

(51) International Patent Classification:
*C12M 1/00* (2006.01)

(21) International Application Number:
PCT/US2008/081818

(22) International Filing Date: 30 October 2008 (30.10.2008)

(25) Filing Language: English

(26) Publication Language: English

(30) Priority Data:
60/983,886 30 October 2007 (30.10.2007) US

(71) Applicant *(for all designated States except US)*: **COMPLETE GENOMICS, INC.** [US/US]; 2071 Stierlin Court, Mountain View, California 94043 (US).

(72) Inventor; and

(75) Inventor/Applicant *(for US only)*: **OLIPHANT, Arnold** [US/US]; 773 Palm Court, Sunnyvale, California 94086 (US).

(74) Agents: **ALLEN, Kenneth, R.** et al.; Townsend And Townsend And Crew LLP, Two Embarcadero Center, 8th Floor, San Francisco, California 94111-3834 (US).

(81) Designated States *(unless otherwise indicated, for every kind of national protection available)*: AE, AG, AL, AM, AO, AT, AU, AZ, BA, BB, BG, BH, BR, BW, BY, BZ, CA, CH, CN, CO, CR, CU, CZ, DE, DK, DM, DO, DZ, EC, EE, EG, ES, FI, GB, GD, GE, GH, GM, GT, HN, HR, HU, ID, IL, IN, IS, JP, KE, KG, KM, KN, KP, KR, KZ, LA, LC, LK, LR, LS, LT, LU, LY, MA, MD, ME, MG, MK, MN, MW, MX, MY, MZ, NA, NG, NI, NO, NZ, OM, PG, PH, PL, PT, RO, RS, RU, SC, SD, SE, SG, SK, SL, SM, ST, SV, SY, TJ, TM, TN, TR, TT, TZ, UA, UG, US, UZ, VC, VN, ZA, ZM, ZW.

(84) Designated States *(unless otherwise indicated, for every kind of regional protection available)*: ARIPO (BW, GH, GM, KE, LS, MW, MZ, NA, SD, SL, SZ, TZ, UG, ZM, ZW), Eurasian (AM, AZ, BY, KG, KZ, MD, RU, TJ, TM), European (AT, BE, BG, CH, CY, CZ, DE, DK, EE, ES, FI, FR, GB, GR, HR, HU, IE, IS, IT, LT, LU, LV, MC, MT, NL, NO, PL, PT, RO, SE, SI, SK, TR), OAPI (BF, BJ, CF, CG, CI, CM, GA, GN, GQ, GW, ML, MR, NE, SN, TD, TG).

**Published:**
— *with international search report*

(54) **Title:** APPARATUS FOR HIGH THROUGHPUT SEQUENCING OF NUCLEIC ACIDS

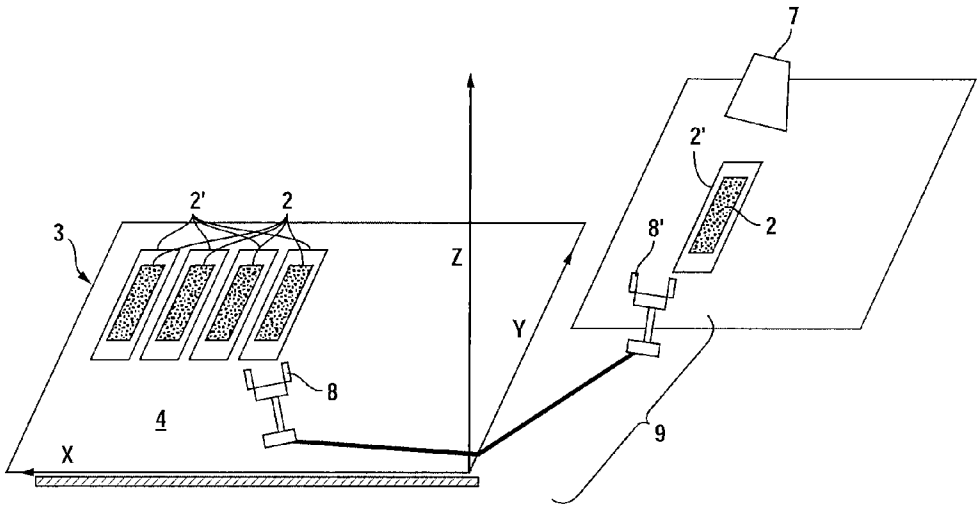


FIG. 4

(57) **Abstract:** A scalable reaction and detection system for automated high throughput sequencing of nucleic acids involving a combination of chemical processes and observation processes independent of the chemistry processes. Discrete functional units may be configured in a manner that allows the system to interchangeably utilize different sequencing reaction components in conjunction with discrete apparatus components for optical image collection and/or analysis.

WO 2009/059022 A1