CLAIMS

1. A conjugate comprising an active agent coupled, via a linker, to at least ~~one~~ two targeting moieties~~y~~ (TMs), wherein each of the TMs binds to HSP90, wherein the active agent comprises a radioactive agent or a chelating agent for a radioactive agent, and wherein the conjugate ~~the conjugate~~ comprises a structure of Formula **X10**:

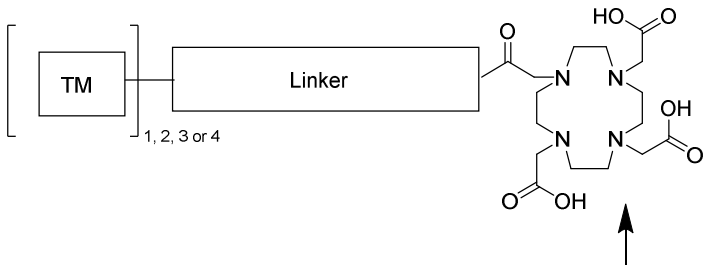

DOTA **(X10),**

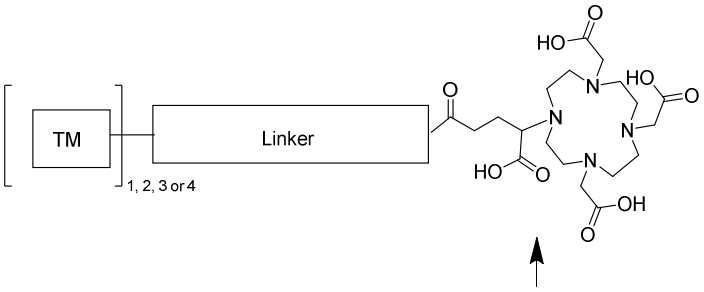

DOTAGA

or Formula **X20**: **(X20),**

wherein the linker comprises a spacer that comprises at least two amino acids, or

wherein the conjugate comprises at least one pharmacokinetic modulating unit (PMU).

2. The conjugate of claim 1, wherein the linker comprises a spacer~~, wherein the spacer~~ that comprises at least ~~one~~ two amino acids ~~or analog(s) thereof~~.

3. The conjugate of claim 2, wherein the spacer comprises ~~2 amino acids or analogs thereof,~~ 3 amino acids ~~or analogs thereof~~, 4 amino acids ~~or analogs thereof~~, or 5 amino acids ~~or analogs thereof~~.

4. The conjugate of claim 2, wherein the conjugate comprises a structure of Formula **A10**:

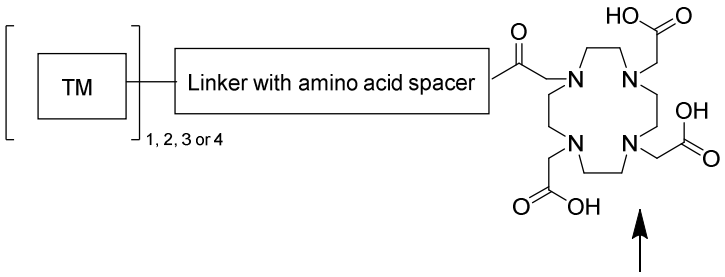

DOTA **(A10),**

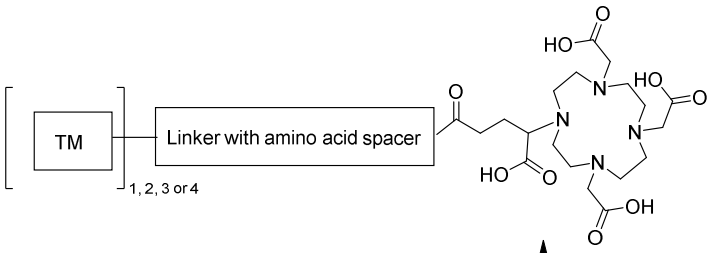

DOTAGA

or Formula **A20**: (**A20**),

wherein the conjugate comprises an active agent coupled, via a linker, to two targeting moieties (TMs).

5. The conjugate of any of claims 2-4, wherein the TM is selected from TM1, TM2, TM3, TM4, TM5, TM8, TM9, TM10, TM11, TM12, TM13, TM14, TM6, TM7, or TM15.

6. The conjugate of claim 2, wherein the conjugate is T1, ~~T2,~~ T4, T5, T6, T8, T9, ~~T10,~~ T27, T28, T29, T39, CMP13, CMP14, CMP15, CMP16, ~~CMP23,~~ CMP37, CMP38, CMP43, CMP44, CMP45, CMP46, CMP47, CMP48, CMP49, CMP50, T1', ~~T2',~~ T4', T5', T6', T8', T9', ~~T10',~~ T27', T28', T29', T39', CMP13', CMP14', CMP15', CMP16', ~~CMP23',~~ CMP37', CMP38', CMP43', CMP44', CMP45', CMP46', CMP47', CMP48', CMP49', CMP50', or a radioactive analog or pharmaceutically acceptable salt thereof.

7. ~~The conjugate of claim 1~~ A conjugate comprising an active agent coupled, via a linker, to at least one targeting moiety (TM), wherein the TM binds to HSP90, wherein the active agent comprises a radioactive agent or a chelating agent for a radioactive agent, and wherein the conjugate the conjugate comprises a structure of Formula **X10**:

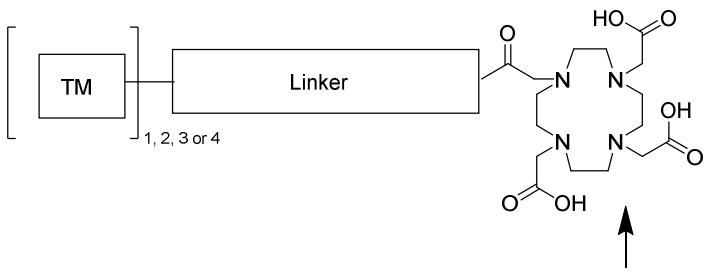

(X10),

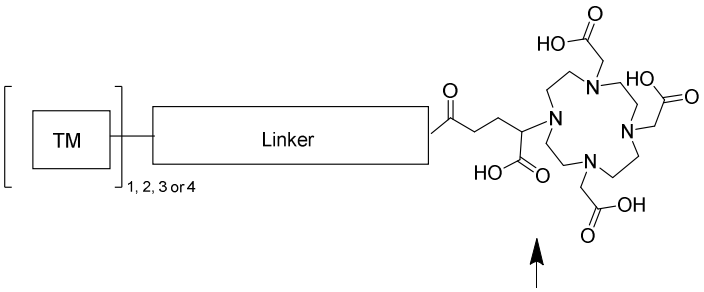

or Formula **X20**: **(X20)**, wherein the linker comprises a spacer, wherein the spacer comprises polyethylene glycol (PEG).

8. The conjugate of claim 7, wherein the spacer ~~is~~ comprises (PEG)4 or (PEG)12.

9. The conjugate of claim 7, wherein the conjugate comprises a structure of Formula **B10**:

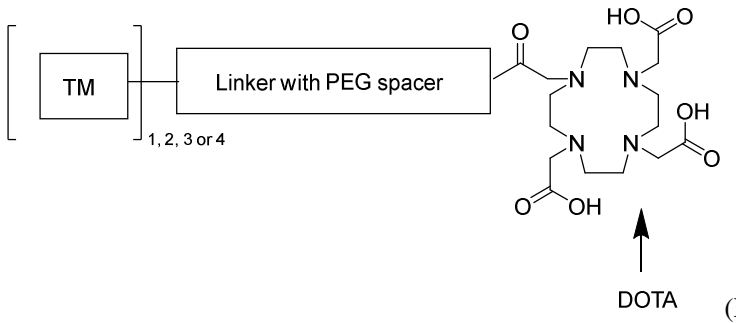

(**B10**),

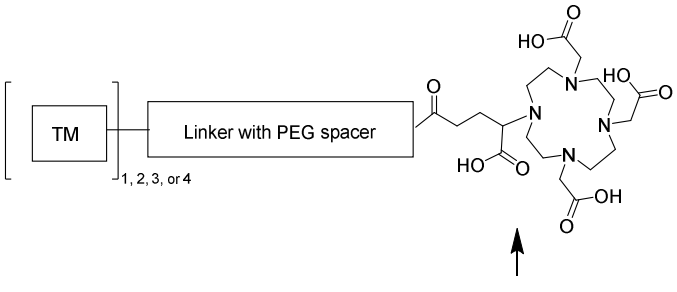

or Formula **B20**: (**B20**),

wherein the conjugate comprises one or two targeting moieties (TMs).

10. The conjugate of any one of claims 7-9, wherein the TM is selected from TM1, TM2, TM3, TM4, TM5, TM8, TM9, TM10, TM11, TM12, TM13, TM14, TM6, TM7, or TM15.

11. The conjugate of claim 7, wherein the conjugate is CMP1, CMP2, CMP29, CMP30, CMP31, CMP32, CMP33, CMP34, CMP35, CMP36, CMP39, CMP40, CMP41, CMP42, CMP52, CMP1', CMP2', CMP29', CMP30', CMP31', CMP32', CMP33', CMP34', CMP35', CMP36', CMP39', CMP40', CMP41', CMP42', CMP52', or a radioactive analog or pharmaceutically acceptable salt thereof.

12. The conjugate of claim 1, wherein the conjugate comprises at least one pharmacokinetic modulating unit (PMU).

13. The conjugate of claim 12, wherein the PMU binds to albumin.

14. The conjugate of claim 13, wherein the PMU comprises 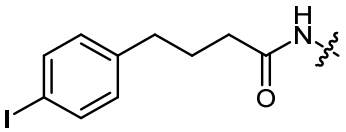

.

15. The conjugate of claim 12, wherein the conjugate comprises a structure of Formula **C10**:

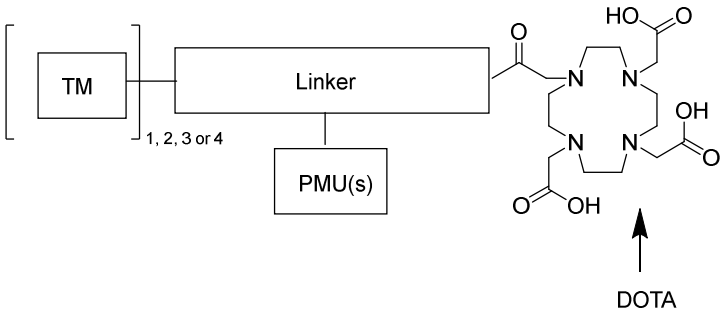

(**C10**) or Formula **C20**:

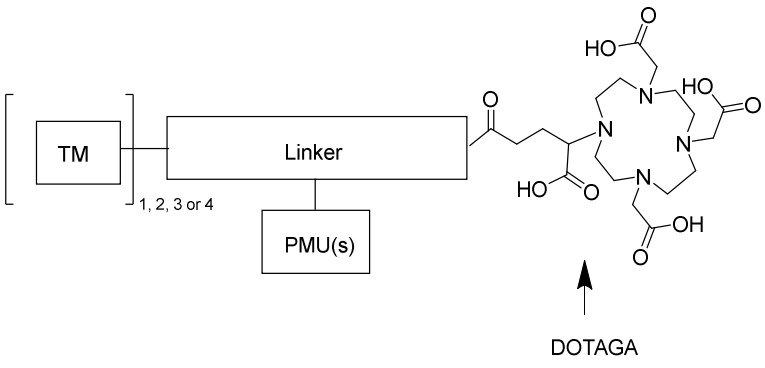

(**C20**).

16. The conjugate of any one of claims 12-15, wherein the TM is selected from TM1, TM2, TM3, TM4, TM5, TM8, TM9, TM10, TM11, TM12, TM13, TM14, TM6, TM7, or TM15.

17. The conjugate of claim 12, wherein the conjugate is ~~CMP3, CMP4, CMP5, CMP6,~~ T3, ~~T7, T11,~~ T12, T13, T14, T15, T16, T17, T22, T23, T32, T24, T33, T34, T35, T36, T37, T38, T41, T42, ~~CMP3', CMP4', CMP5', CMP6',~~ T3', ~~T7', T11',~~ T12', T13', T14', T15', T16', T17', T22', T23', T32', T24', T33', T34', T35', T36', T37', T38', T41', T42', or a radioactive analog or pharmaceutically acceptable salt thereof.

18. The conjugate of claim 1, wherein the TM is selected from TM1, TM2, TM3, TM4, TM5, TM8, TM9, TM10, TM11, TM12, TM13, TM14, TM6, TM7, or TM15.

19. ~~The conjugate of claim 1~~A conjugate comprising an active agent coupled, via a linker, to at least one targeting moiety (TM), wherein the TM binds to HSP90, wherein the conjugate is CMP3, CMP4, CMP5, CMP6, CMP7, CMP8, CMP9, CMP10, CMP 11, CMP12, CMP17, CMP18, CMP19, CMP20, CMP21, CMP22, CMP23, CMP24, CMP25, CMP26, CMP27, CMP28, T2, T7, T10, T11, T18, T19, T20, T21, T25, T26, T30, T31, T43, T40, CMP3', CMP4', CMP5', CMP6', CMP7', CMP8', CMP9', CMP10', CMP11', CMP12', CMP17', CMP18', CMP19', CMP20', CMP21',

CMP22', CMP23', CMP24', CMP25', CMP26', CMP27', CMP28', T2', T7', T10', T11', T18', T19', T20', T21', T25', T26', T30', T31', T43', T40', or a radioactive analog or pharmaceutically acceptable salt thereof.

20. A pharmaceutical composition comprising the conjugate of any one of claims 1-19 and at least one pharmaceutically acceptable excipient.

21. Use of ~~A method of reducing cell proliferation comprising administering~~ a therapeutically effective amount of at least one conjugate of claim 1 in the manufacture of a medicament for reducing cell proliferation, wherein said medicament is to be administered to the cell.

22. The ~~method~~ use of claim 21, wherein the cell is a cancer cell.

23. The ~~method~~ use of claim 22, wherein the cancer cell is a small-cell lung cancer cell, a non-small-cell lung cancer cell, a sarcoma cell, a pancreatic cancer cell, a breast cancer cell, or a colon cancer cell.

24. Pharmaceutical composition of claim 20 for use in therapy.

25. Use of the pharmaceutical composition of claim 20 in the manufacture of a medicament for the treatment of cancer.

26. The use of claim 25, wherein the cancer is small-cell lung cancer, non-small-cell lung cancer, sarcoma, pancreatic cancer, breast cancer, or colon cancer.