FIG. 1.

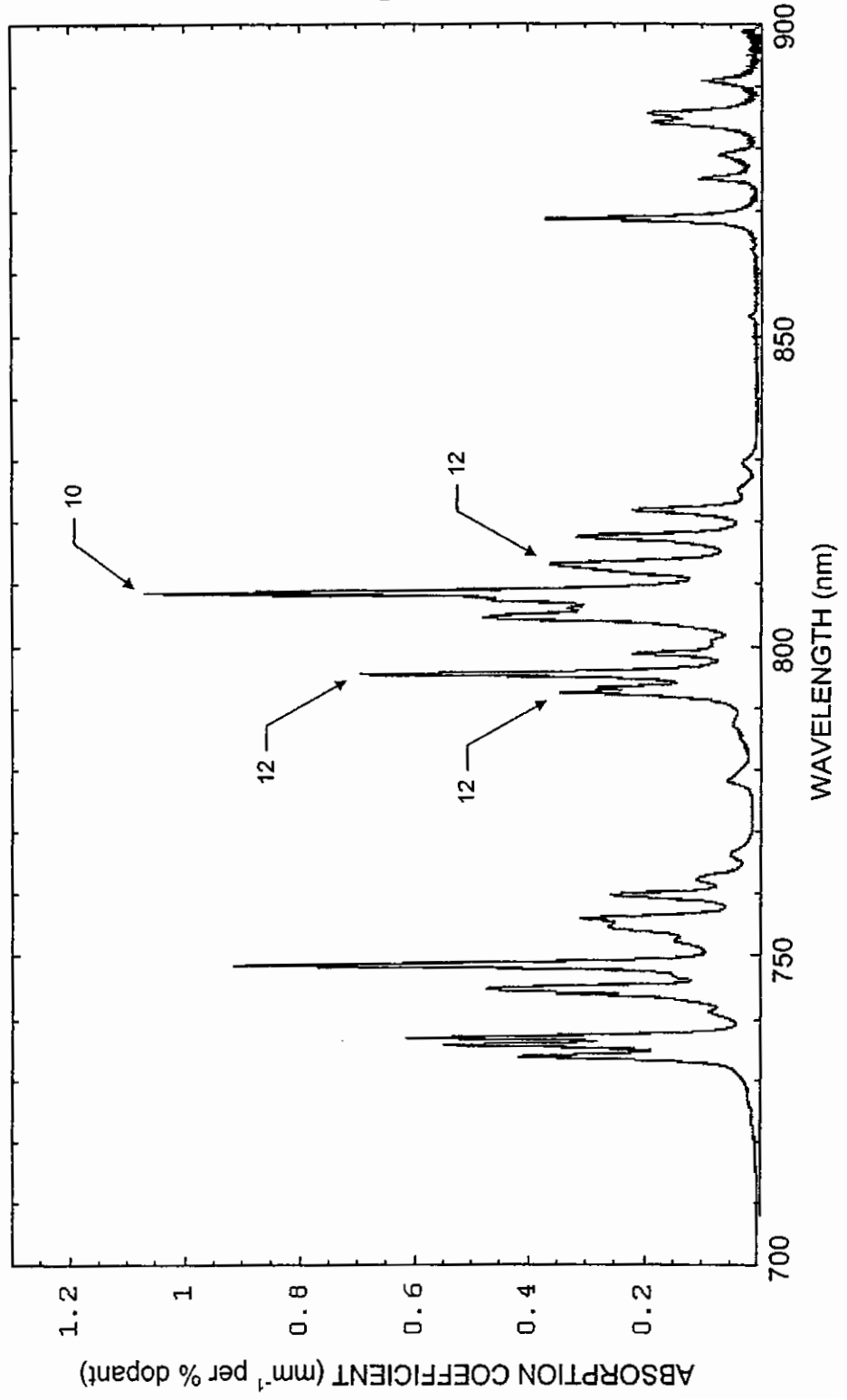
Nd:Yag Absorption Spectrum at 1% dopant concentration
ABSORPTION COEFFICIENT (mm⁻¹ per % dopant)
WAVELENGTH (nm)
1.2
1
0.8
0.6
0.4
0.2
700
750
800
850
900
10
12
12
12
12

FIG. 2.

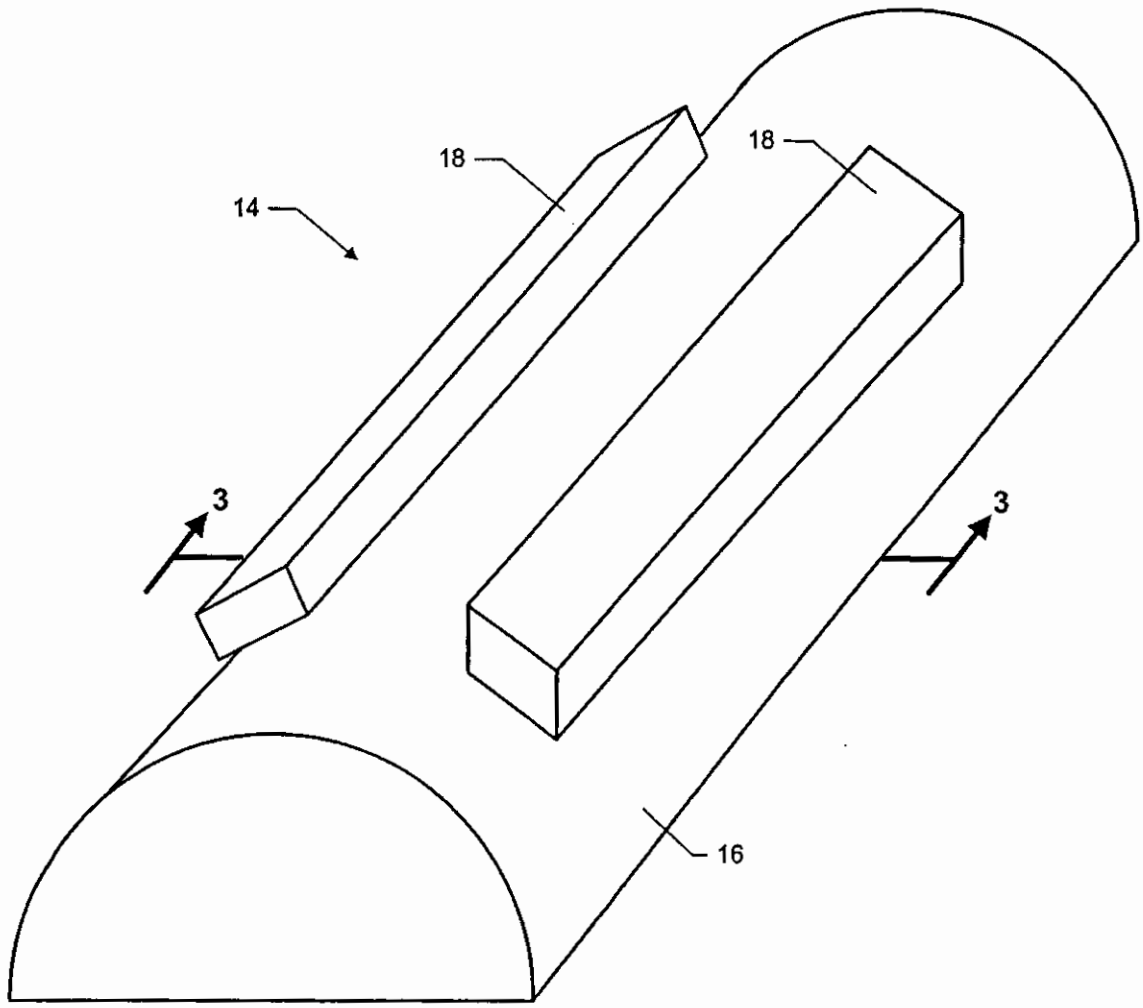

FIG. 3.

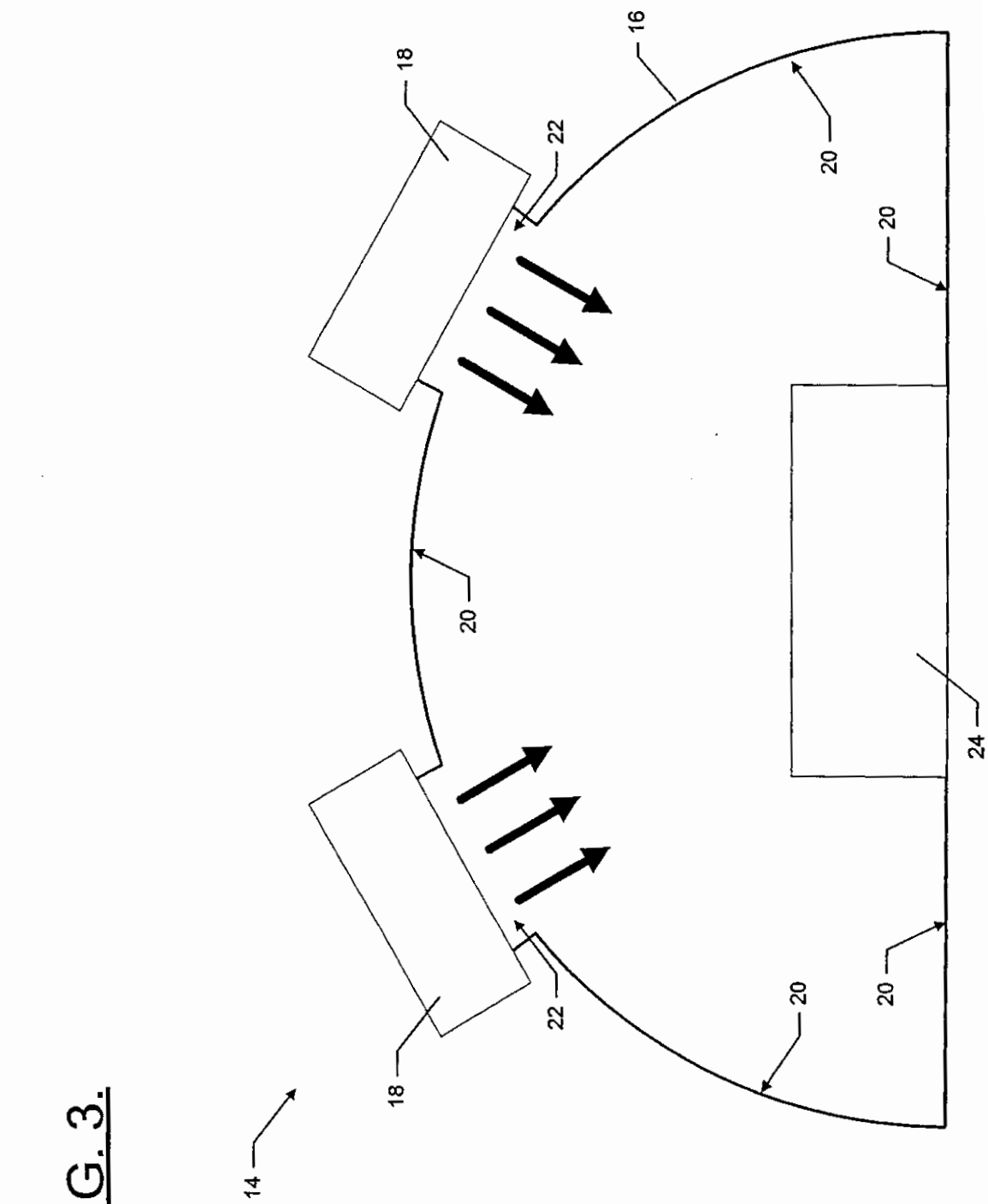

FIG. 4.

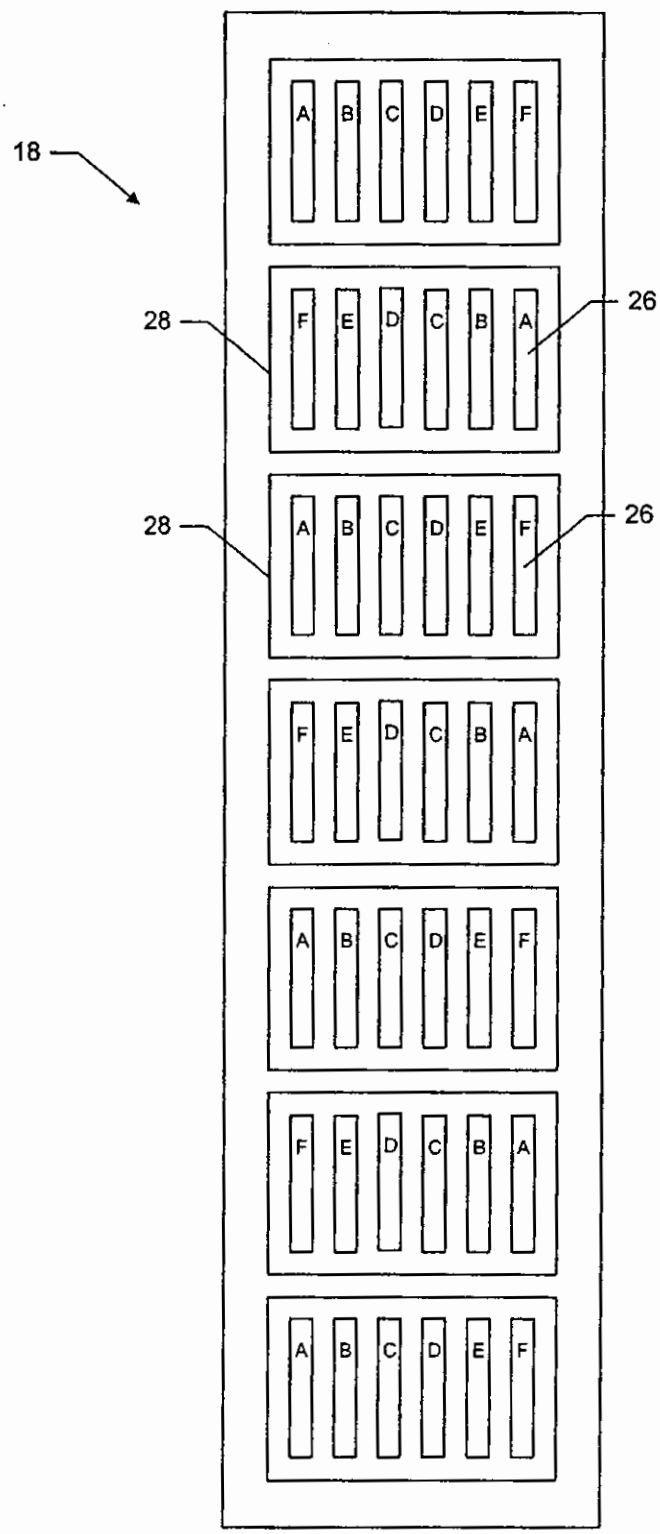
18
28
26
28
26
A B C D E F
F E D C B A
A B C D E F
F E D C B A
A B C D E F
F E D C B A
A B C D E F