(12) INTERNATIONAL APPLICATION PUBLISHED UNDER THE PATENT COOPERATION TREATY (PCT)

(19) World Intellectual Property Organization
International Bureau

(43) International Publication Date
28 February 2008 (28.02.2008)

PCT

(10) International Publication Number
WO 2008/023988 A1

(51) International Patent Classification:
B63B 35/44 (2006.01)

(21) International Application Number:
PCT/NO2007/000289

(22) International Filing Date: 20 August 2007 (20.08.2007)

(25) Filing Language: English

(26) Publication Language: English

(30) Priority Data:
20063730 21 August 2006 (21.08.2006) NO

(71) Applicant *(for all designated States except US)*: **FRIGSTAD ENGINEERING INC**; P.O. Box 957, Offshore Incorporations Centre, Road Town, Tortola (VG).

(72) Inventor; and

(75) Inventor/Applicant *(for US only)*: **FRIGSTAD, Harald** [NO/NO]; c/o Frigstad Offshore NUF, P.O. Box 703, N-4666 Kristiansand S. (NO).

(74) Agent: **HÅMSØ PATENTBYRÅ ANS**; P.O. Box 171, N-4302 Sandnes (NO).

(81) Designated States *(unless otherwise indicated, for every kind of national protection available)*: AE, AG, AL, AM, AT, AU, AZ, BA, BB, BG, BH, BR, BW, BY, BZ, CA, CH, CN, CO, CR, CU, CZ, DE, DK, DM, DO, DZ, EC, EE, EG, ES, FI, GB, GD, GE, GH, GM, GT, HN, HR, HU, ID, IL, IN, IS, JP, KE, KG, KM, KN, KP, KR, KZ, LA, LC, LK, LR, LS, LT, LU, LY, MA, MD, ME, MG, MK, MN, MW, MX, MY, MZ, NA, NG, NI, NO, NZ, OM, PG, PH, PL, PT, RO, RS, RU, SC, SD, SE, SG, SK, SL, SM, SV, SY, TJ, TM, TN, TR, TT, TZ, UA, UG, US, UZ, VC, VN, ZA, ZM, ZW.

(84) Designated States *(unless otherwise indicated, for every kind of regional protection available)*: ARIPO (BW, GH, GM, KE, LS, MW, MZ, NA, SD, SL, SZ, TZ, UG, ZM, ZW), Eurasian (AM, AZ, BY, KG, KZ, MD, RU, TJ, TM), European (AT, BE, BG, CH, CY, CZ, DE, DK, EE, ES, FI, FR, GB, GR, HU, IE, IS, IT, LT, LU, LV, MC, MT, NL, PL, PT, RO, SE, SI, SK, TR), OAPI (BF, BJ, CF, CG, CI, CM, GA, GN, GQ, GW, ML, MR, NE, SN, TD, TG).

[Continued on next page]

(54) Title: DRILLING VESSEL DEVICE

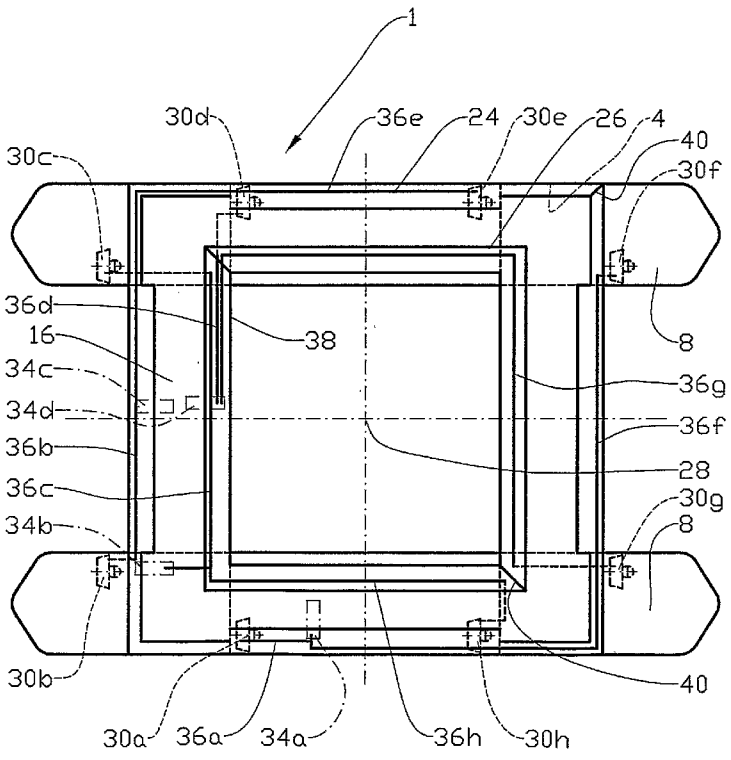

Ib-Ib

(57) Abstract: A drilling vessel (1) device comprising a deck structure (2) including at least a main deck (18) with several generators (32a, 32b, 32c, 32d), and a cellar deck (16) providing a passage for at least a main cable (36a, 36b, 36c, 36d, 36e, 36f, 36g, 36h) from a generator (32a, 32b, 32c, 32d) to a consumption item (30a, 30b, 30c, 30d, 30e, 30f, 30g, 30h), where the cellar deck (16) is provided with at least one about the central vertical axis (28) of the drilling vessel (1) encircling cable compartment (24, 26).

WO 2008/023988 A1

Published:
— *with international search report*
— *before the expiration of the time limit for amending the claims and to be republished in the event of receipt of amendments*