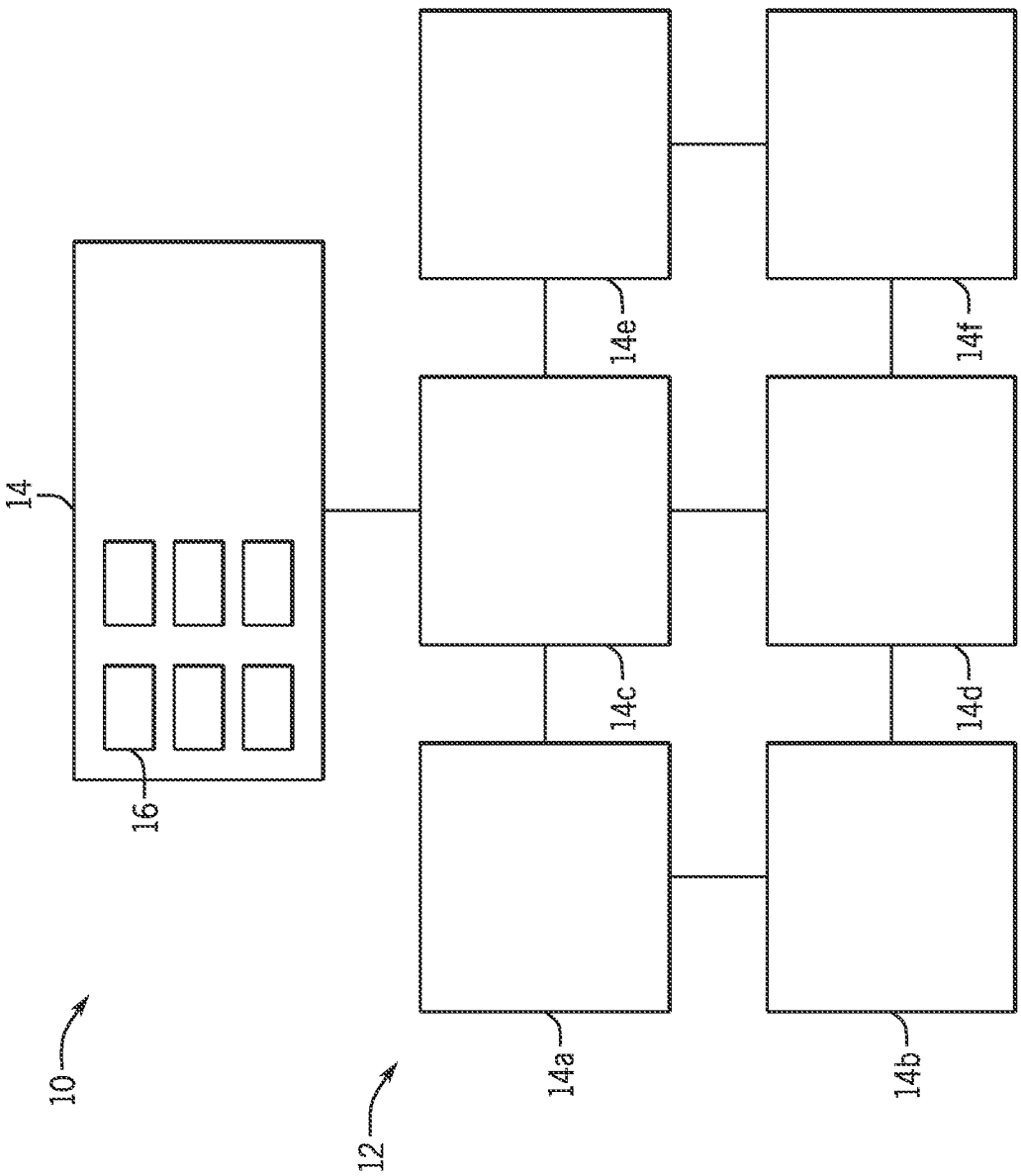

FIG. 1

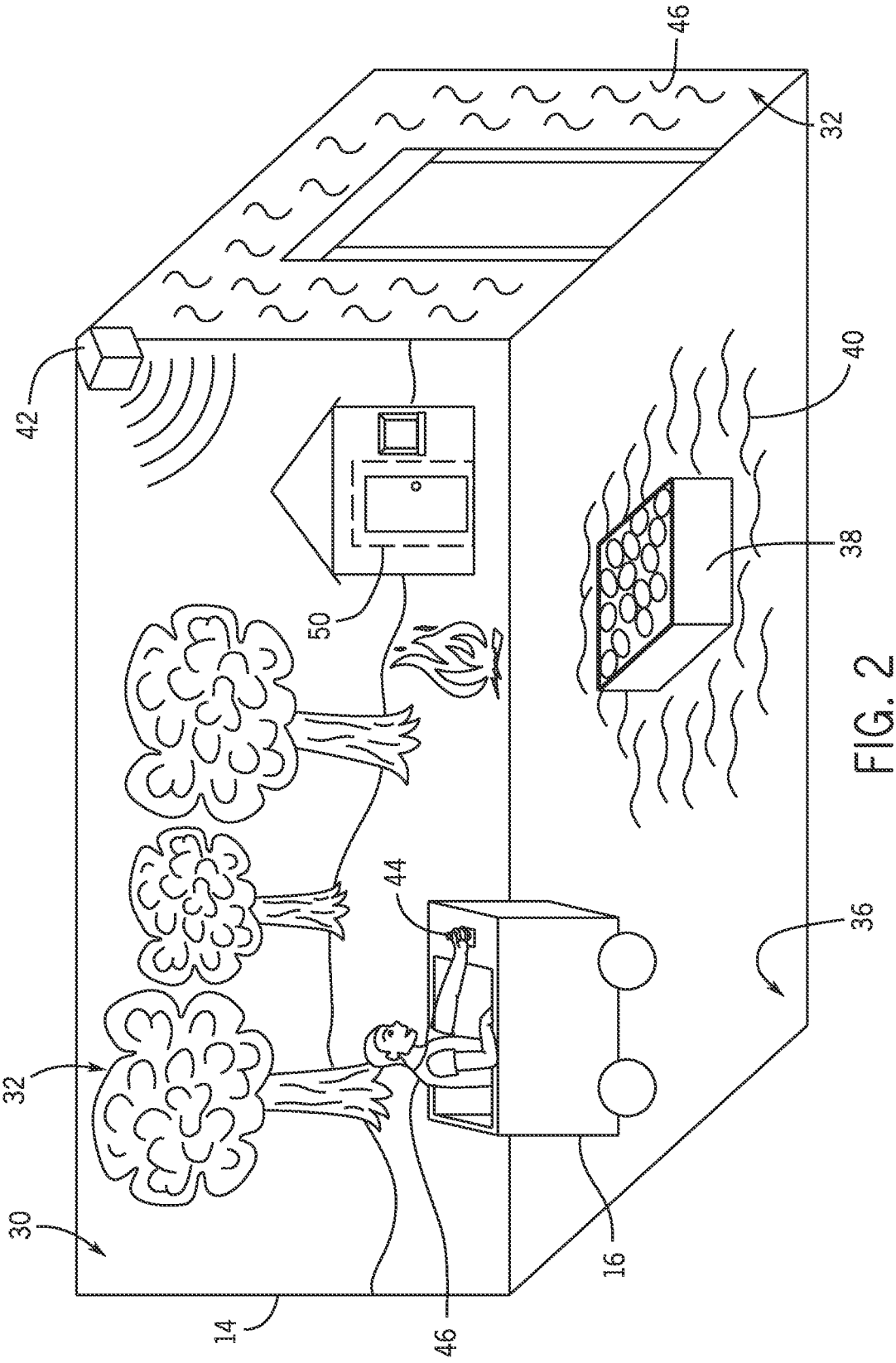

FIG. 2

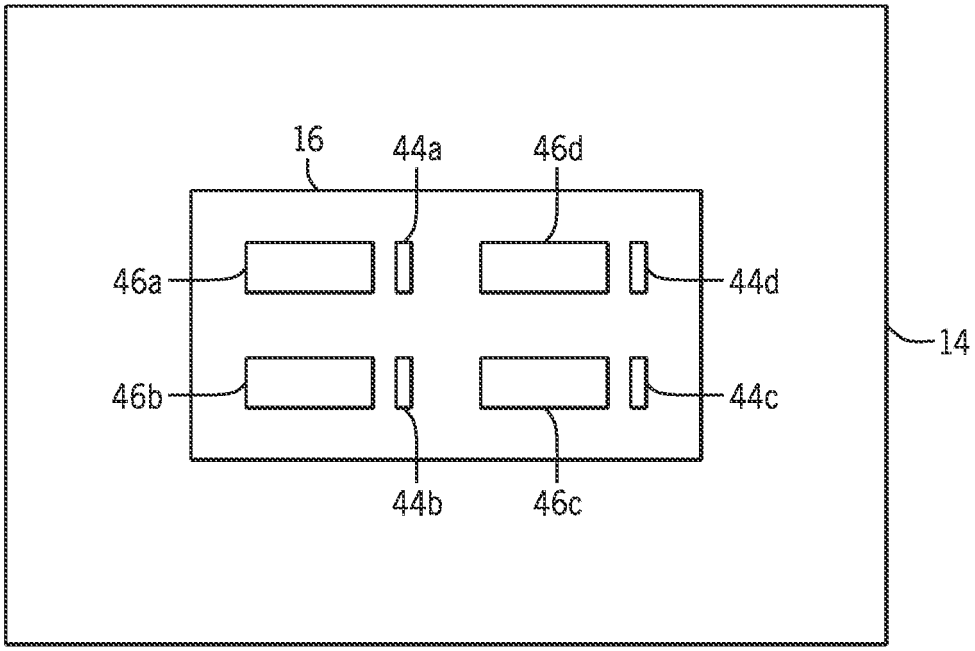

FIG. 3

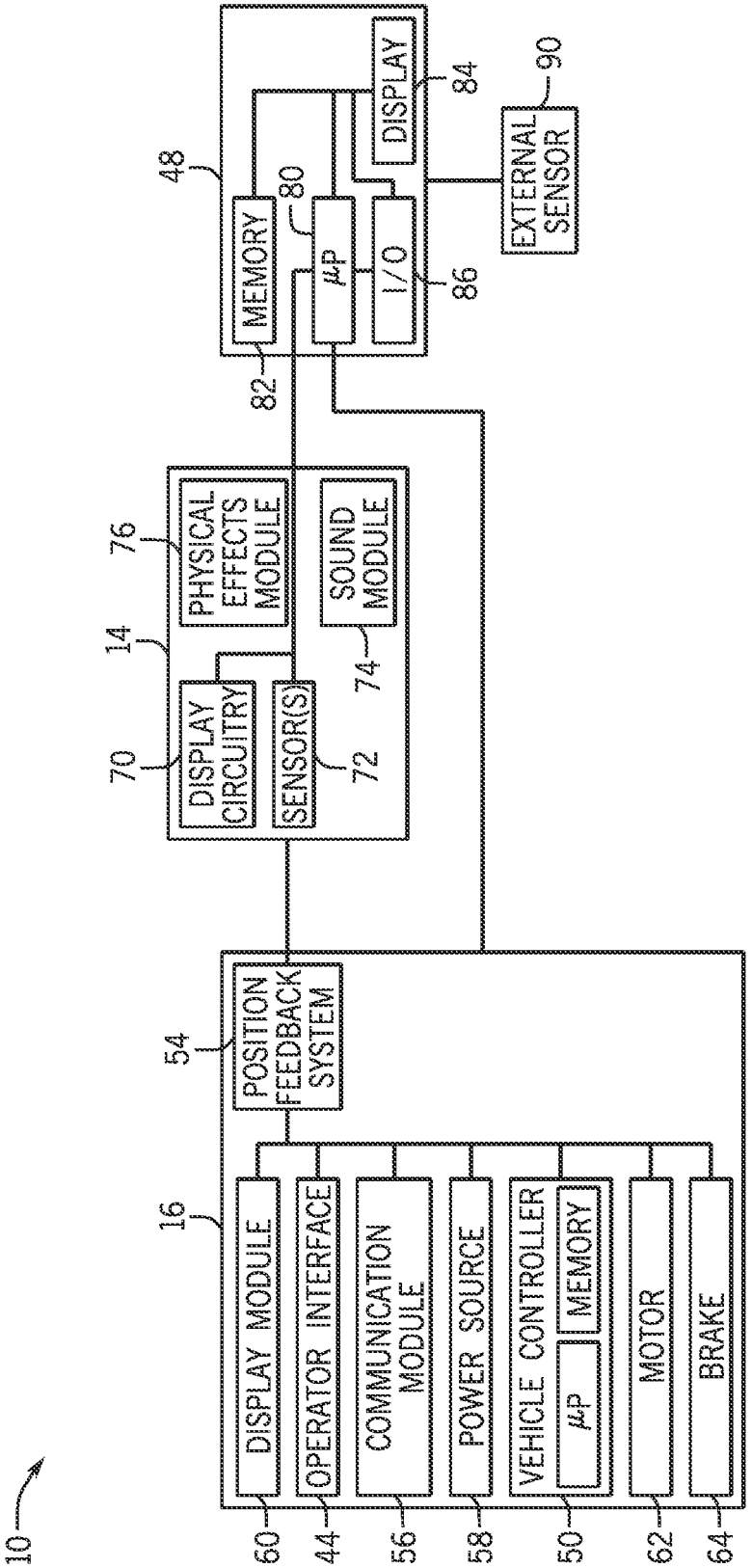
10
16
DISPLAY MODULE
60
OPERATOR INTERFACE
44
COMMUNICATION MODULE
56
POWER SOURCE
58
VEHICLE CONTROLLER
μP
MEMORY
50
MOTOR
62
BRAKE
64
54
POSITION FEEDBACK SYSTEM
14
76
PHYSICAL EFFECTS MODULE
74
SOUND MODULE
70
DISPLAY CIRCUITRY
72
SENSOR(S)
48
82
MEMORY
80
μP
I/O
86
DISPLAY
84
EXTERNAL SENSOR
90

FIG. 4

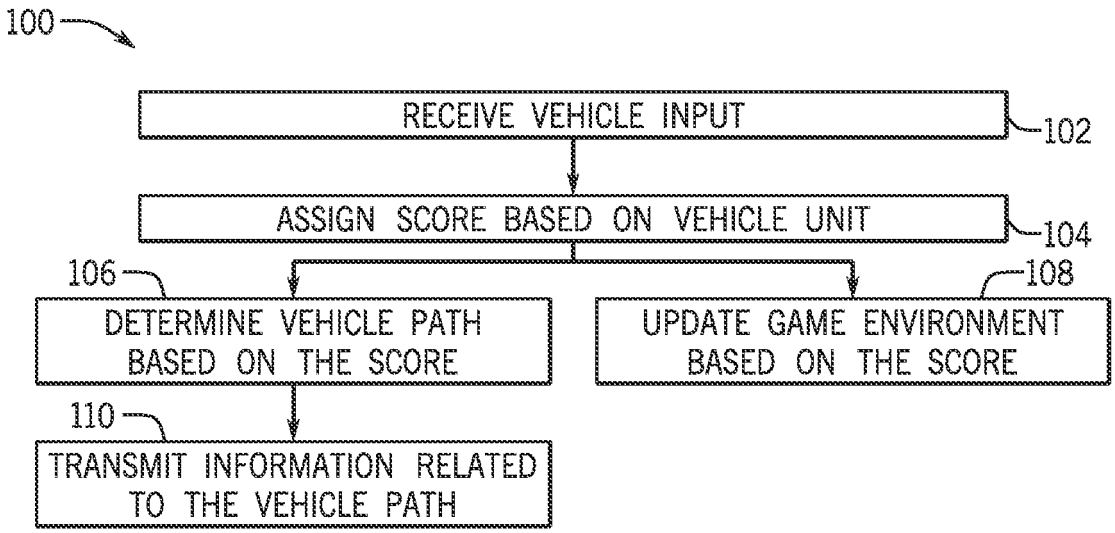
100
RECEIVE VEHICLE INPUT
102
ASSIGN SCORE BASED ON VEHICLE UNIT
104
106
108
DETERMINE VEHICLE PATH BASED ON THE SCORE
UPDATE GAME ENVIRONMENT BASED ON THE SCORE
110
TRANSMIT INFORMATION RELATED TO THE VEHICLE PATH

FIG. 5

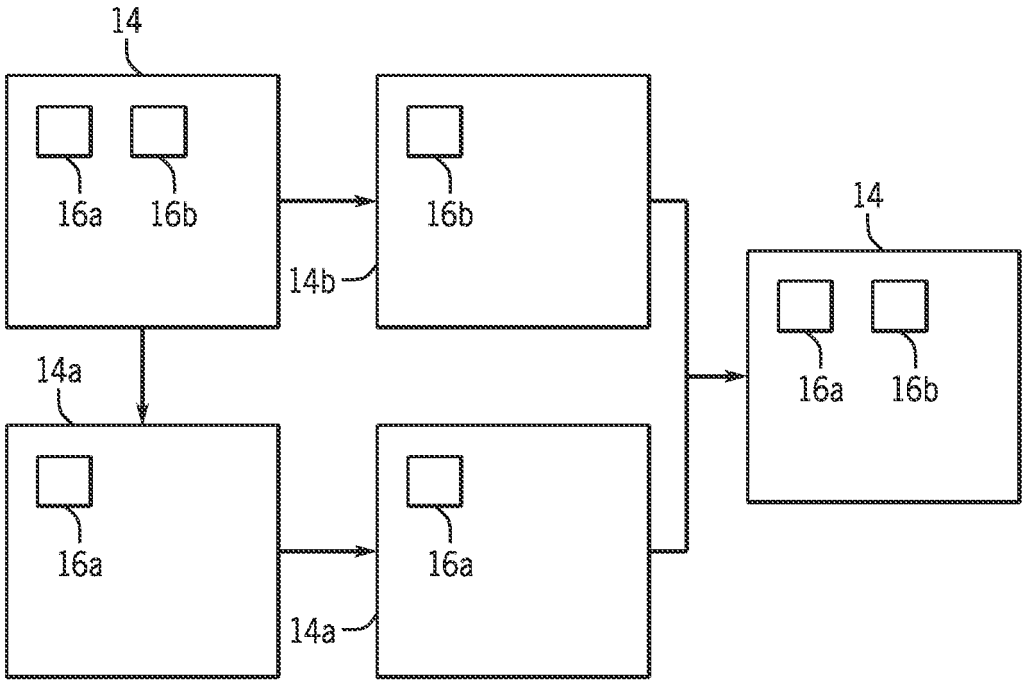
14
16a
16b
16b
14b
14
16a
16b
14a
16a
16a
14a

FIG. 6

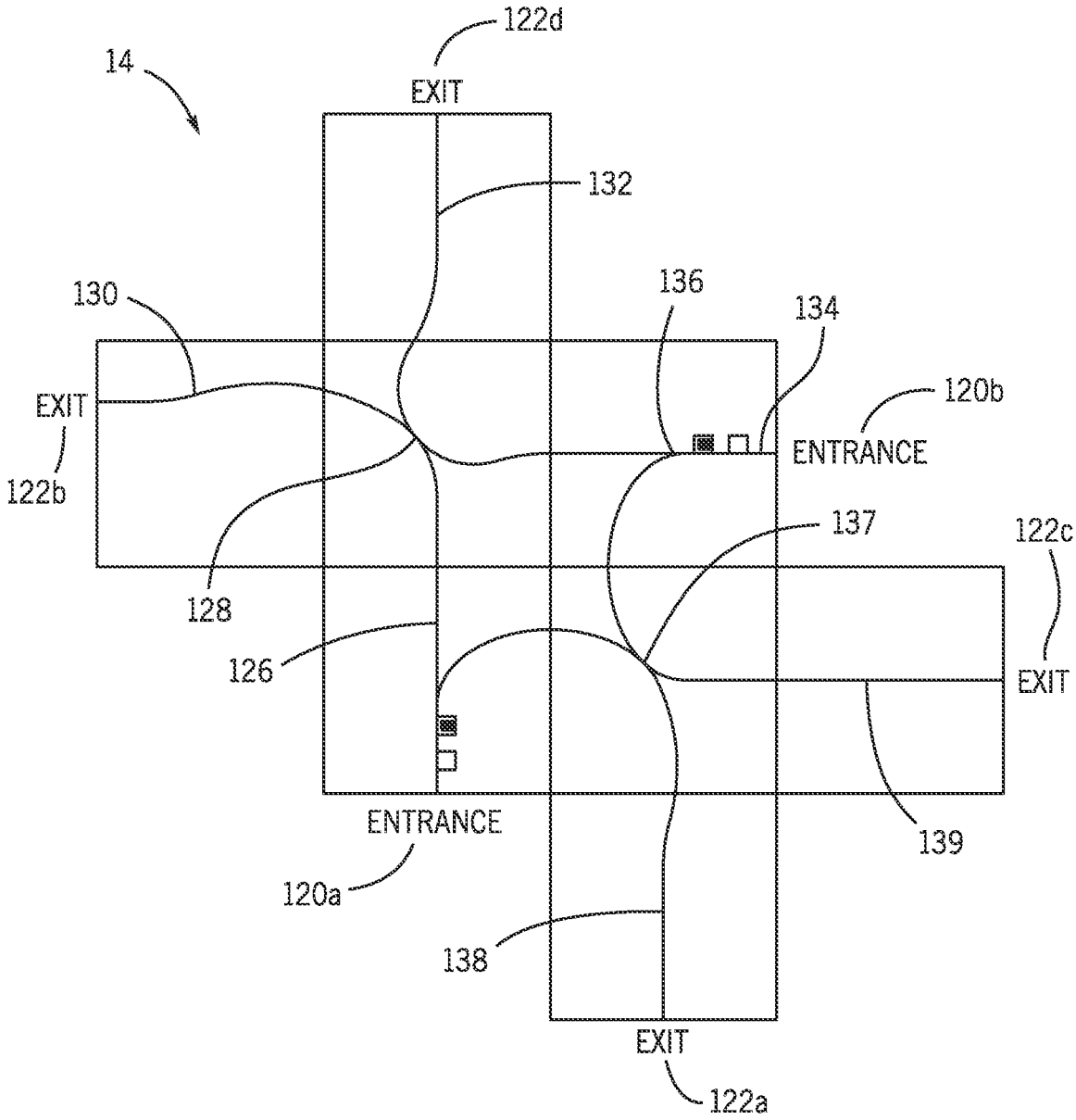
14
122d
EXIT
132
130
136
134
EXIT
120b
122b
ENTRANCE
137
122c
128
126
EXIT
ENTRANCE
139
120a
138
EXIT
122a

FIG. 7

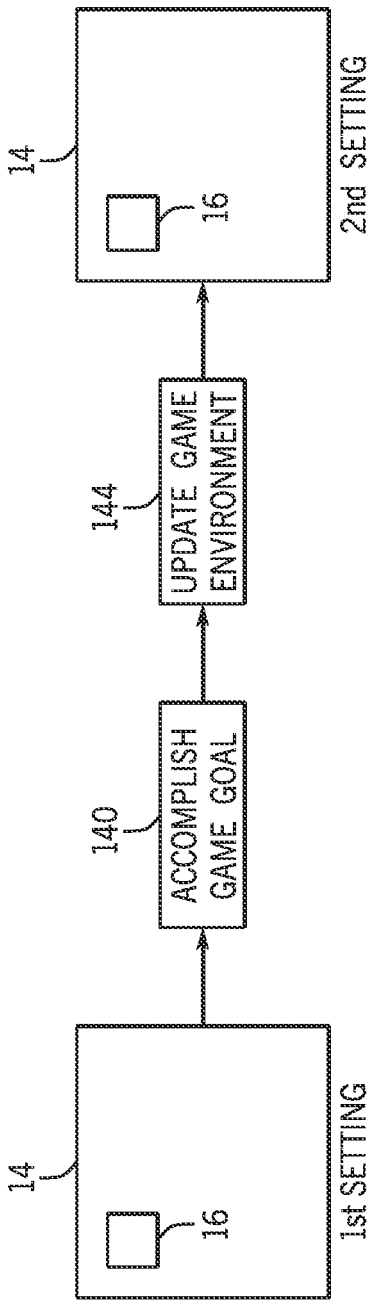
14
16
1st SETTING
140
ACCOMPLISH GAME GOAL
144
UPDATE GAME ENVIRONMENT
14
16
2nd SETTING

FIG. 8

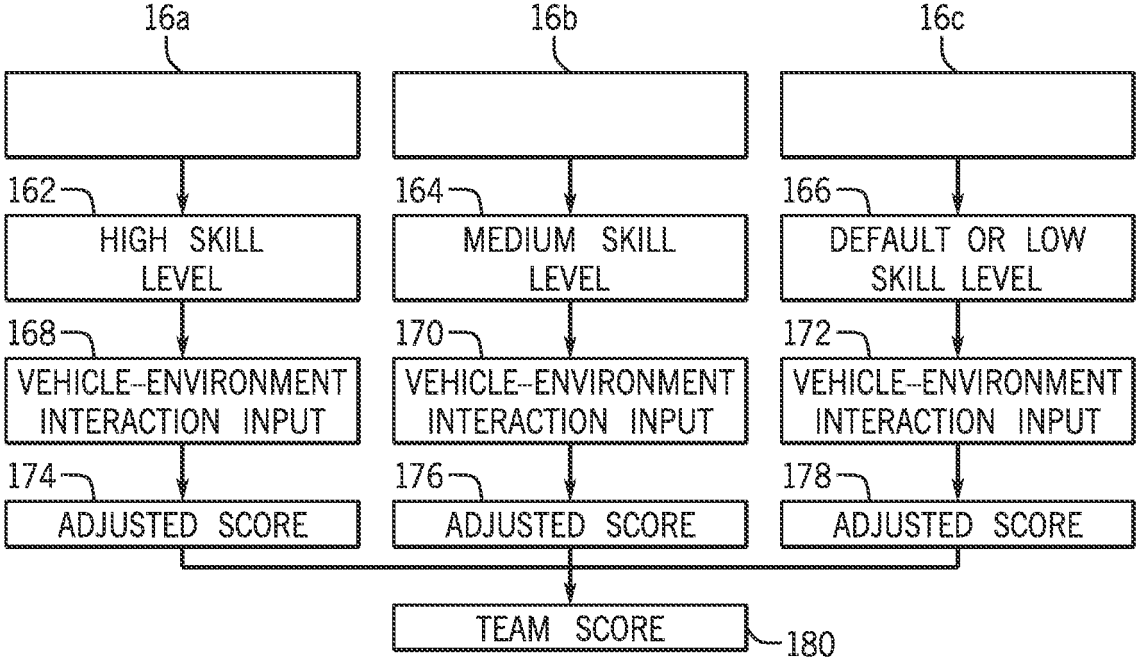
16a
16b
16c
162
HIGH SKILL LEVEL
164
MEDIUM SKILL LEVEL
166
DEFAULT OR LOW SKILL LEVEL
168
VEHICLE-ENVIRONMENT INTERACTION INPUT
170
VEHICLE-ENVIRONMENT INTERACTION INPUT
172
VEHICLE-ENVIRONMENT INTERACTION INPUT
174
ADJUSTED SCORE
176
ADJUSTED SCORE
178
ADJUSTED SCORE
TEAM SCORE
180

FIG. 9

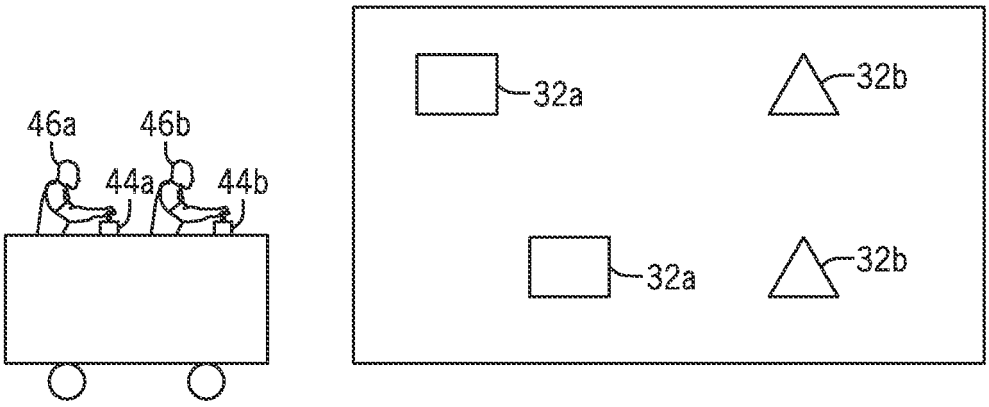
46a
46b
44a
44b
32a
32b
32a
32b

FIG. 10