Fig 1a

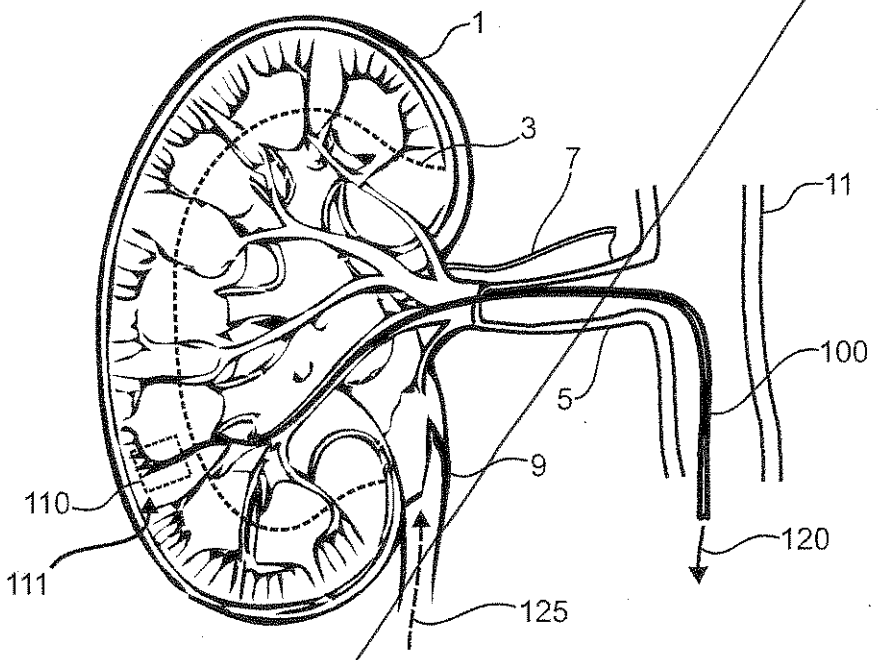

Fig 1b

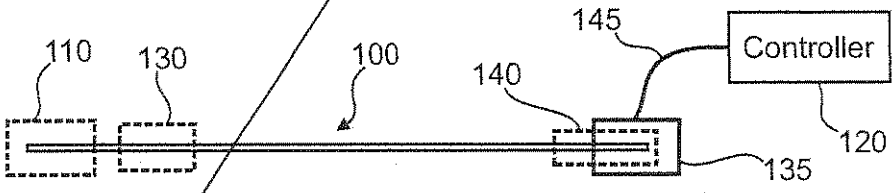

Fig 1c

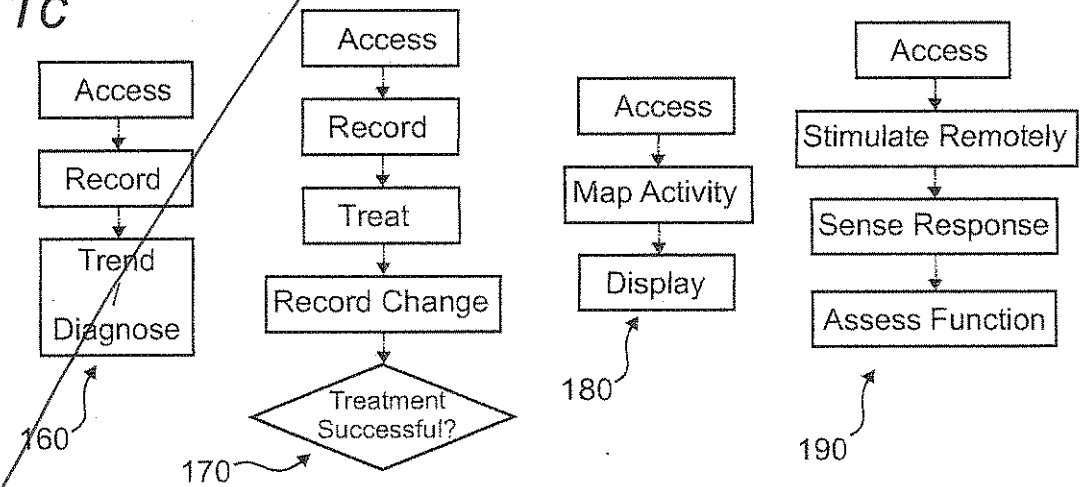

Fig 1d

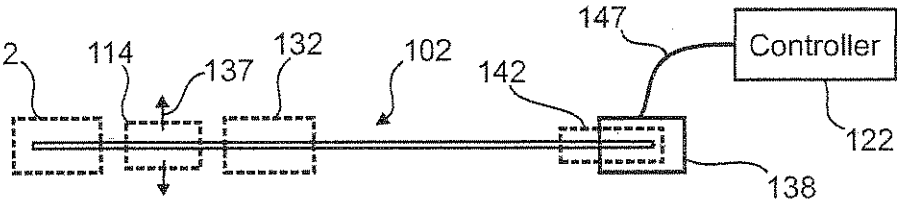

Fig 2a

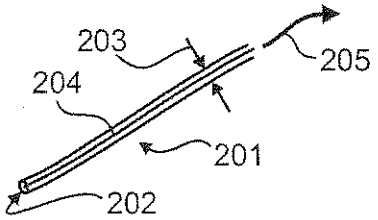

Fig 2b

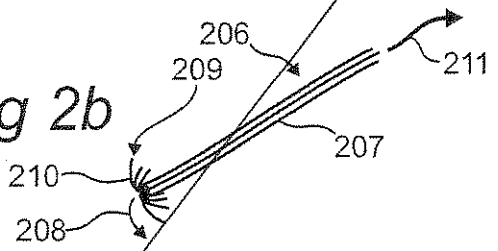

Fig 2c

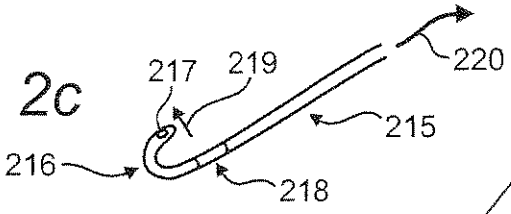

Fig 2d

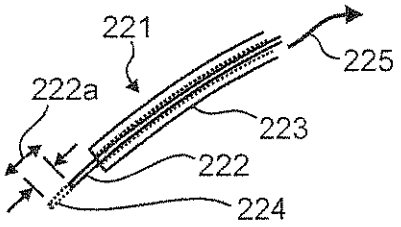

Fig 2e

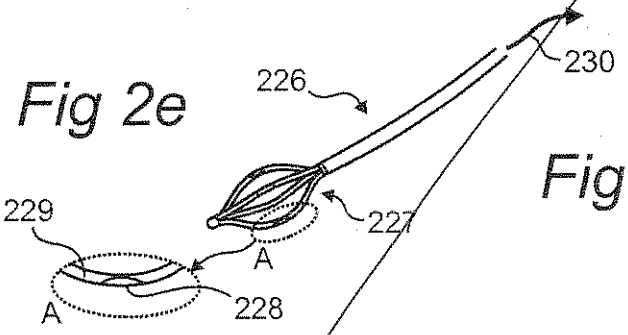

Fig 2f

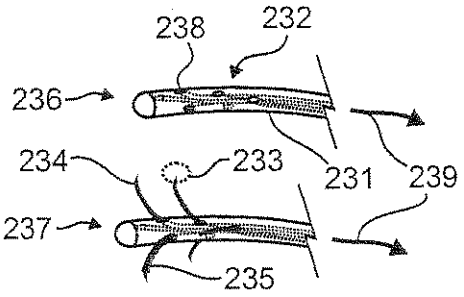

Fig 2g

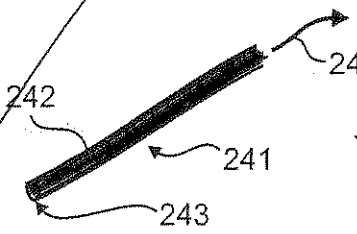

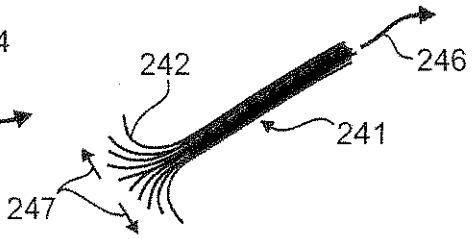

Fig 2h

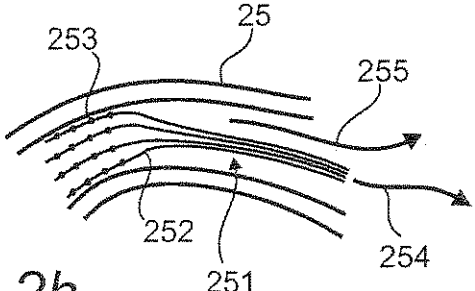

Fig 2i

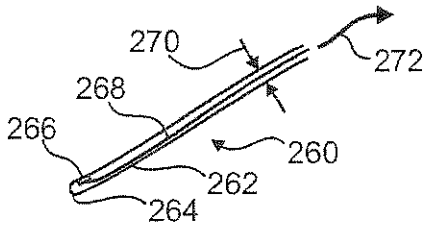

Fig 2j

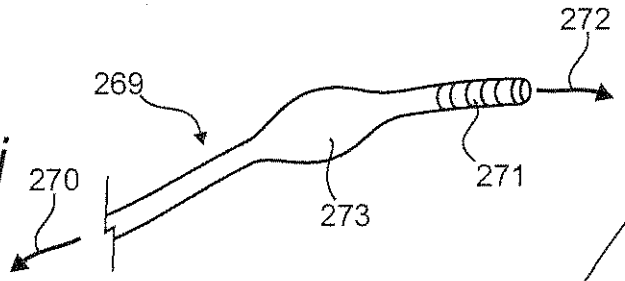

Fig 2k

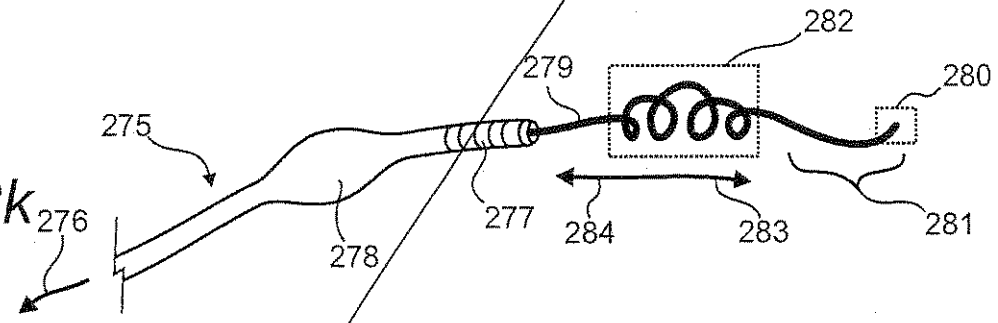

Fig 2l

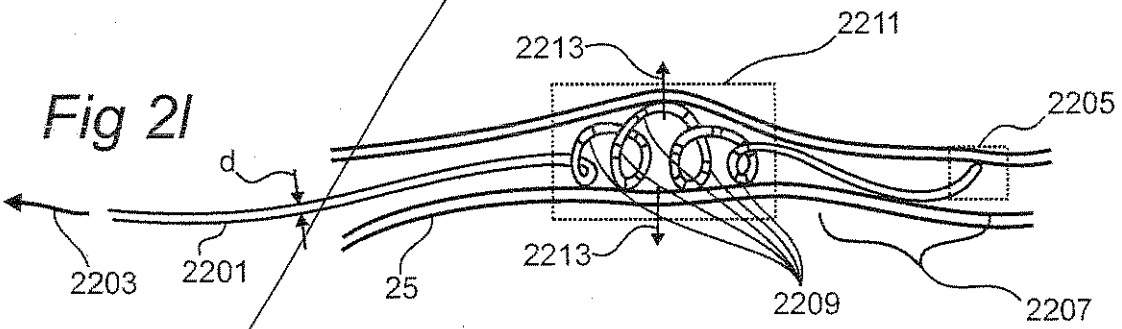

Fig 2m

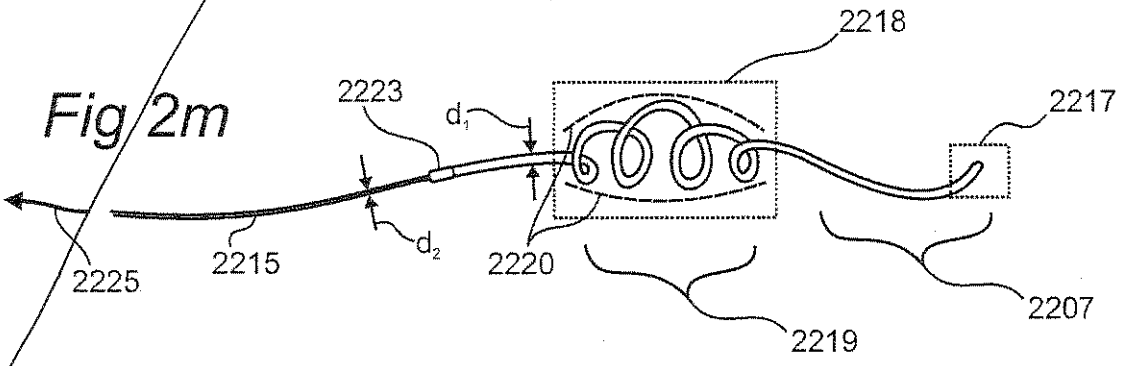

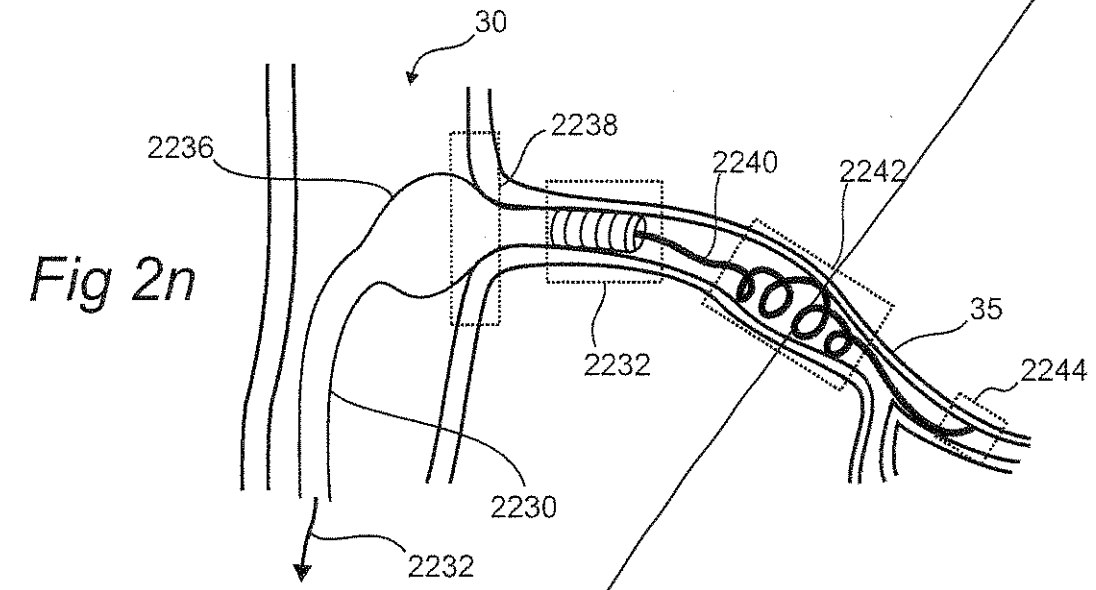

Fig 2n

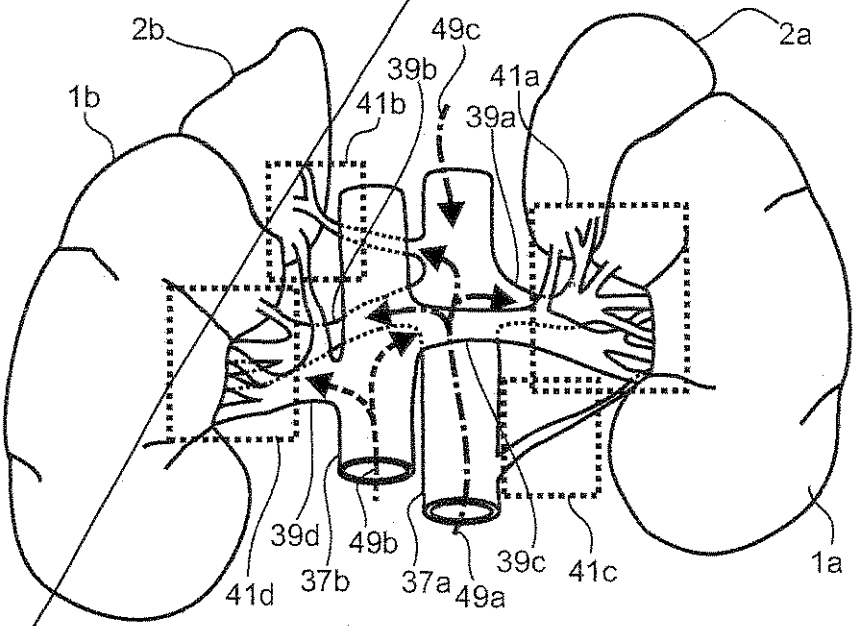

Fig 2n

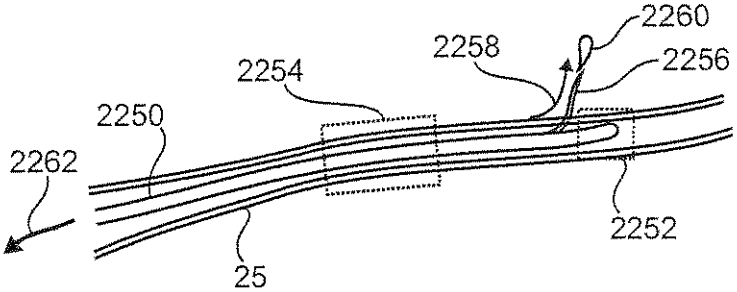

Fig 2p

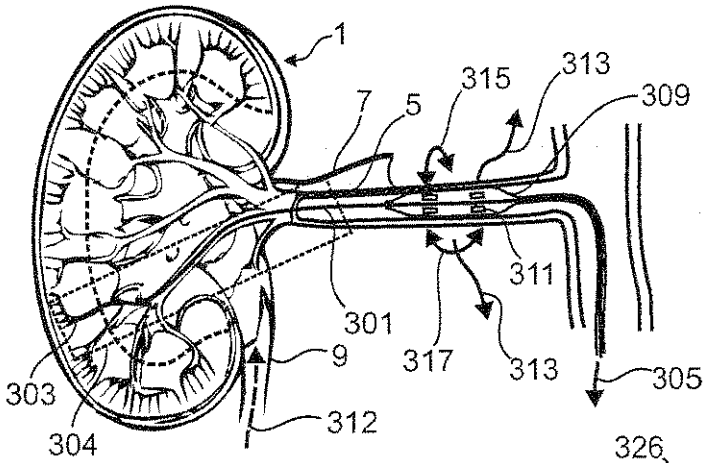

Fig 3a

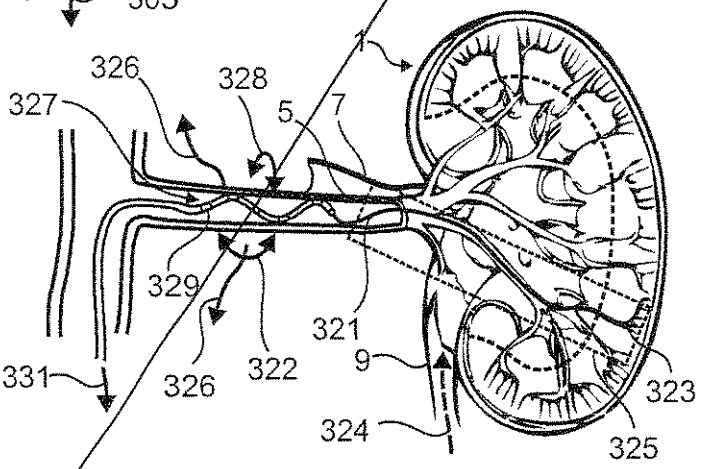

Fig 3b

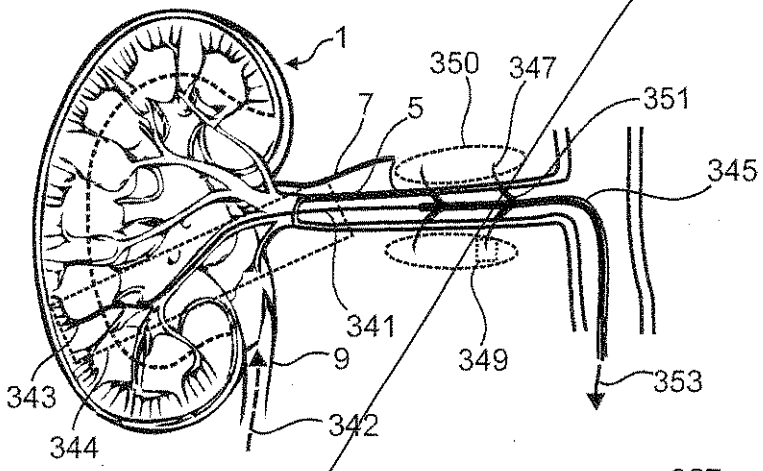

Fig 3c

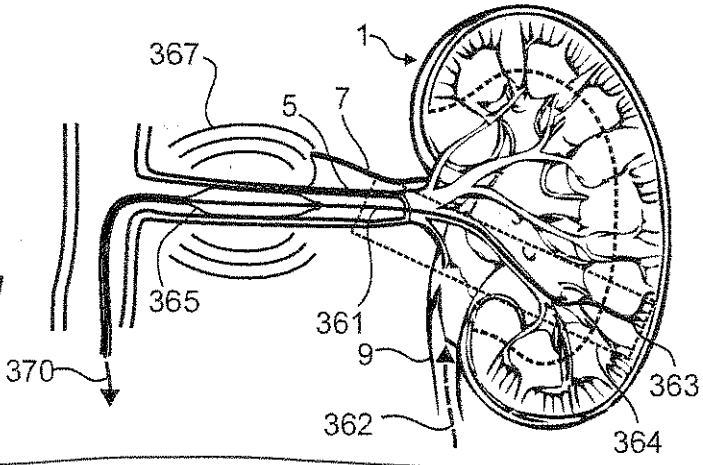

Fig 3d

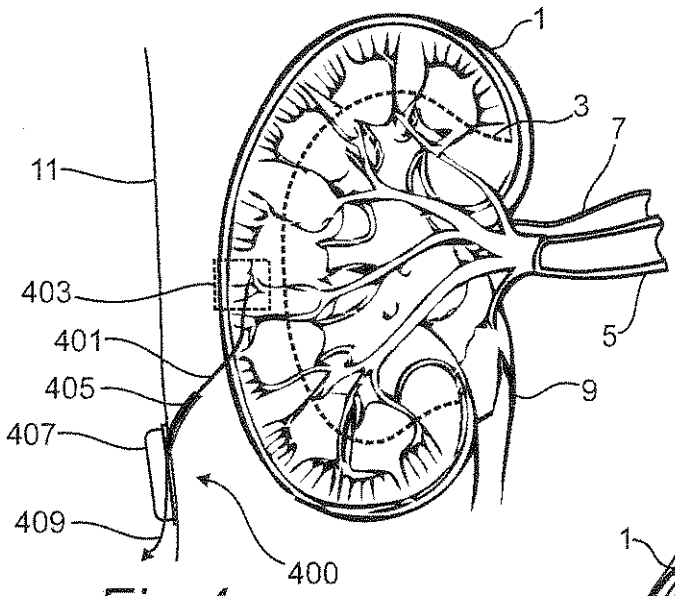

Fig 4a

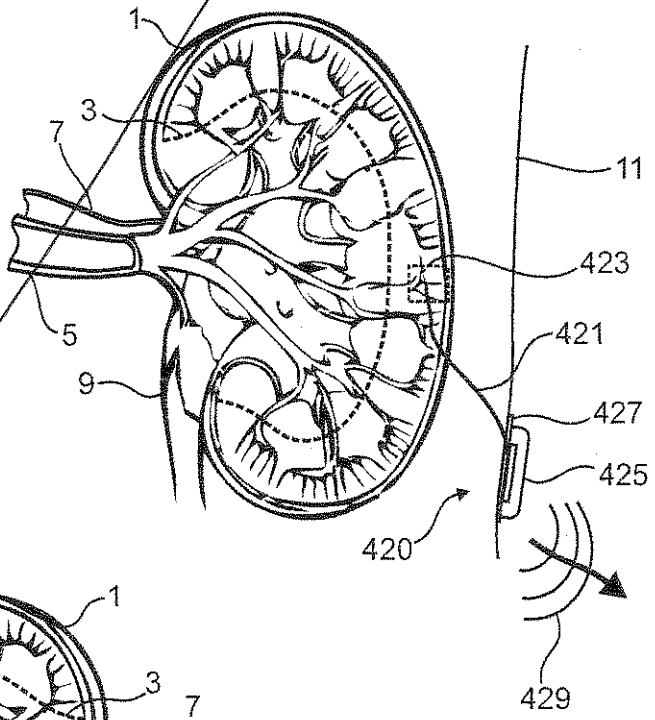

Fig 4b

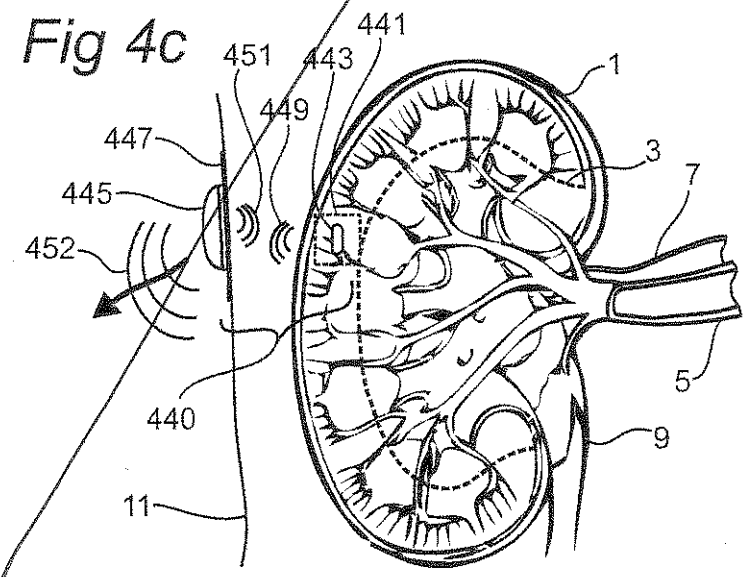

Fig 4c

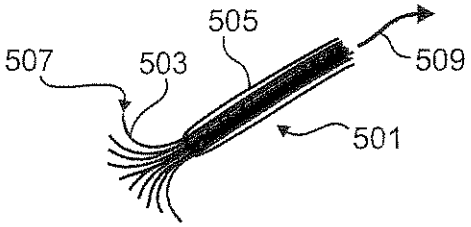

Fig 5a

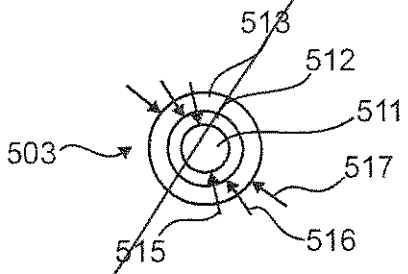

Fig 5b

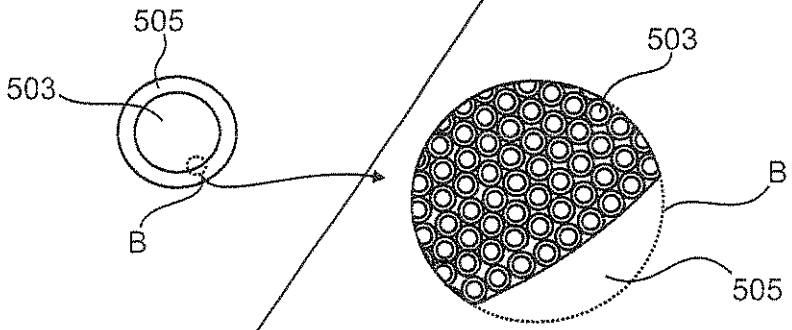

Fig 5c

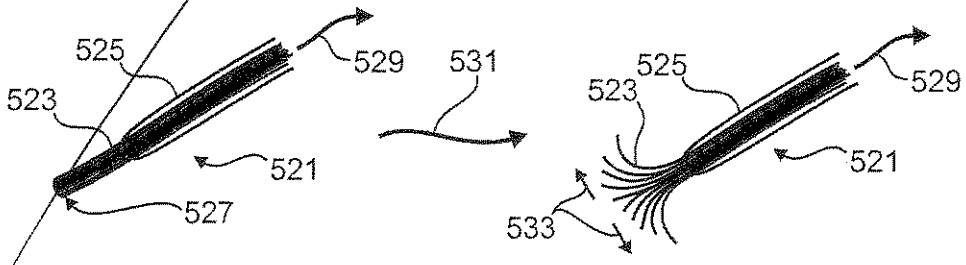

Fig 5d

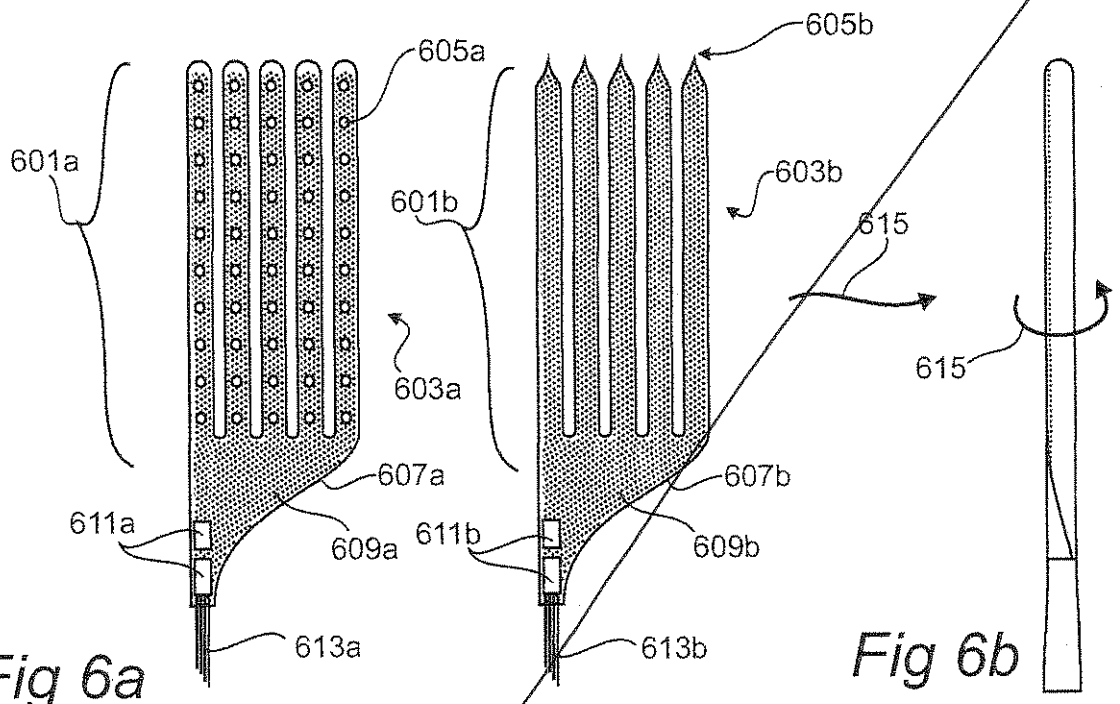

Fig 6a

Fig 6b

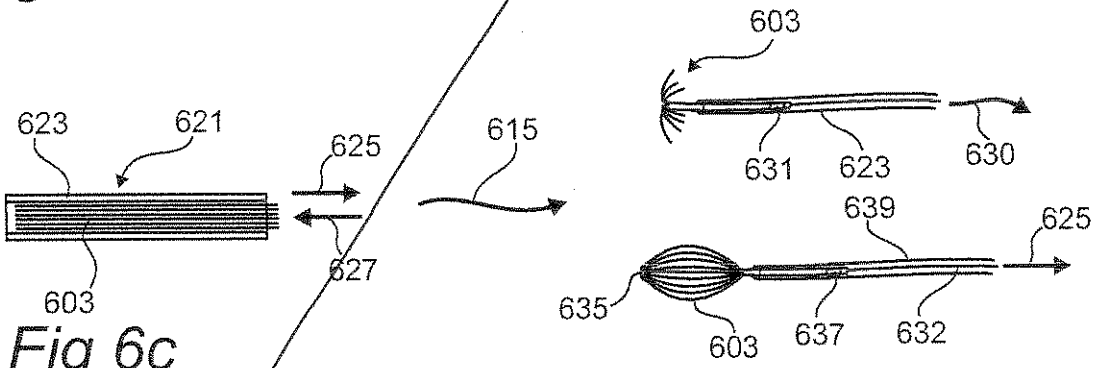

Fig 6c

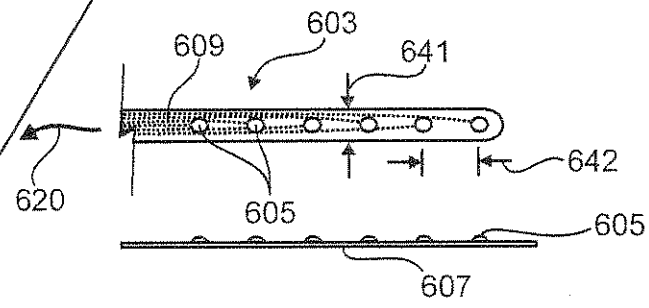

Fig 6d

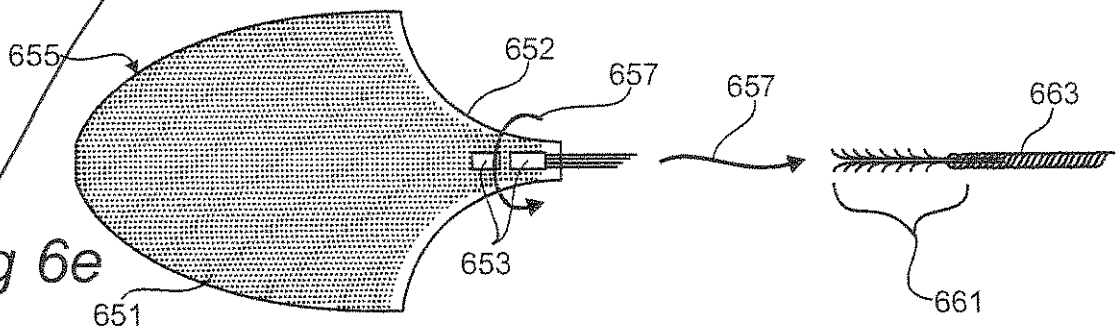

Fig 6e

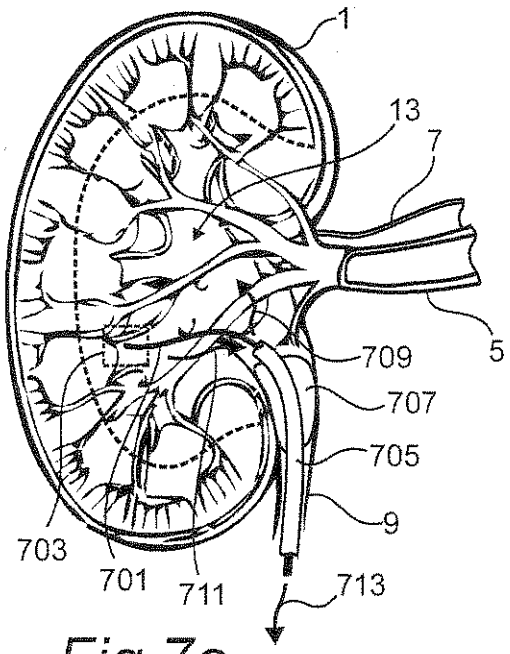

Fig 7a

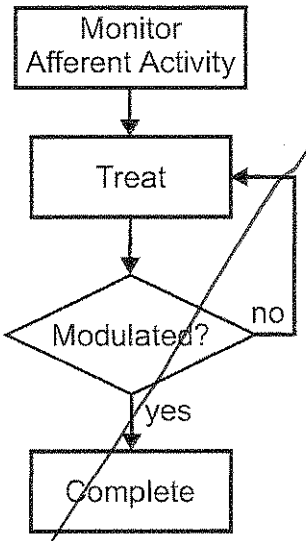

Fig 7b

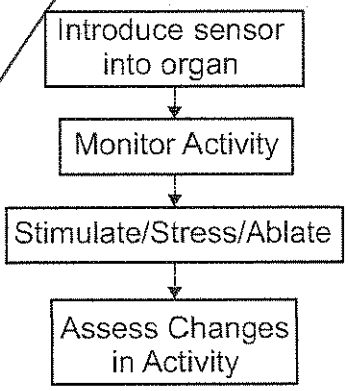

Fig 8a

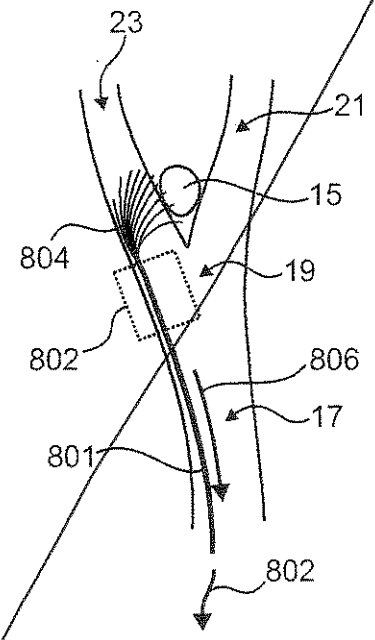

Fig 8b

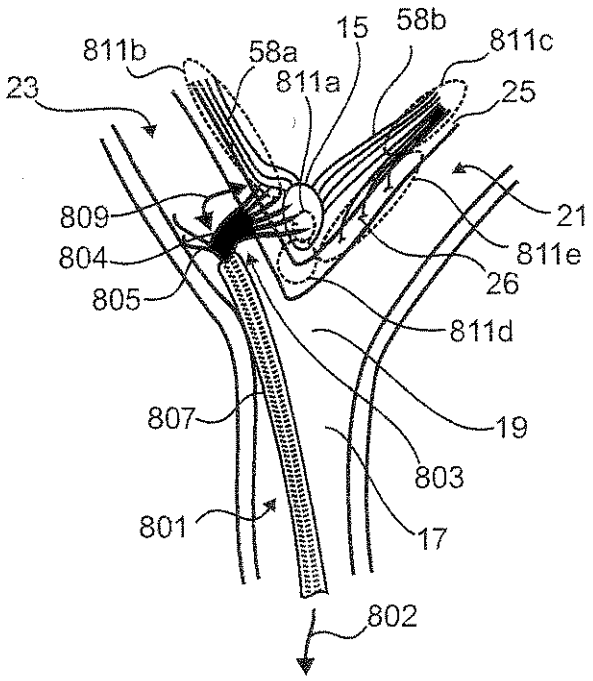

Fig 8c

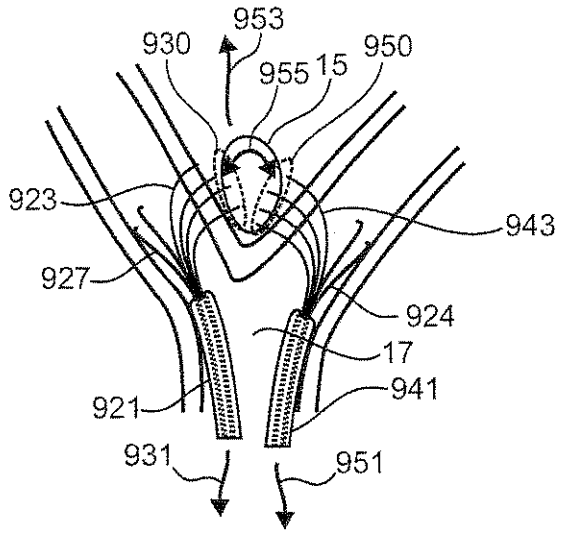

Fig 9

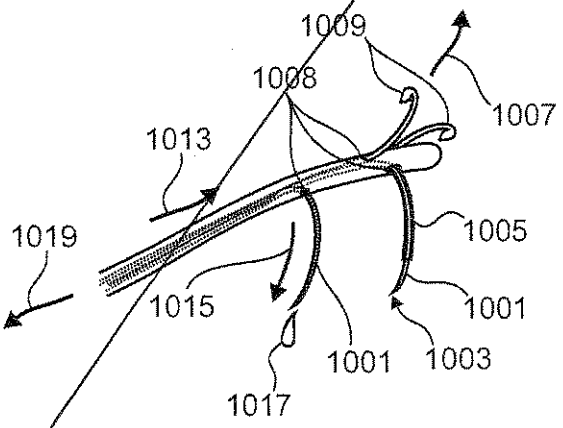

Fig 10

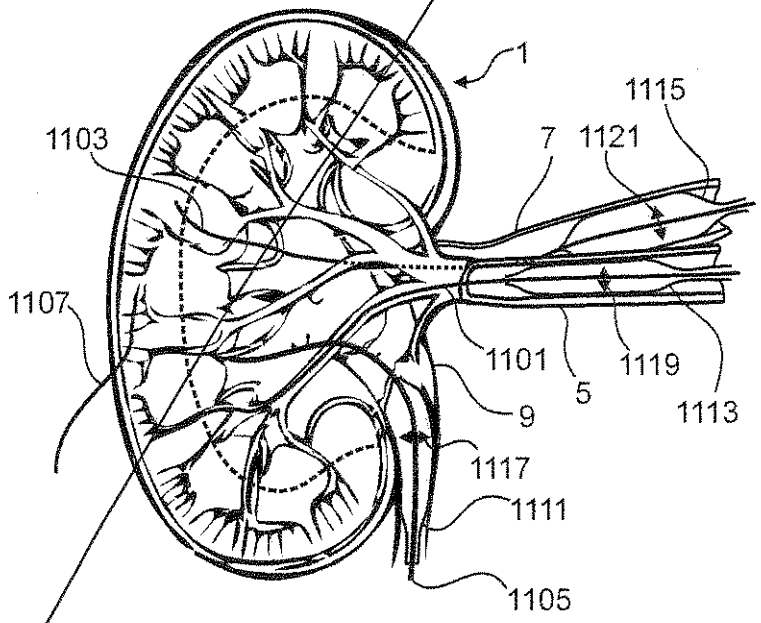

Fig 11

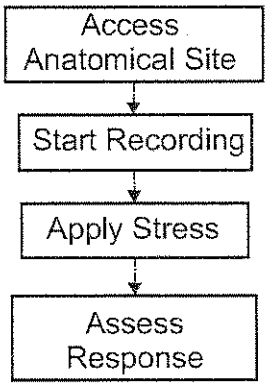

Fig 12

Fig 1a

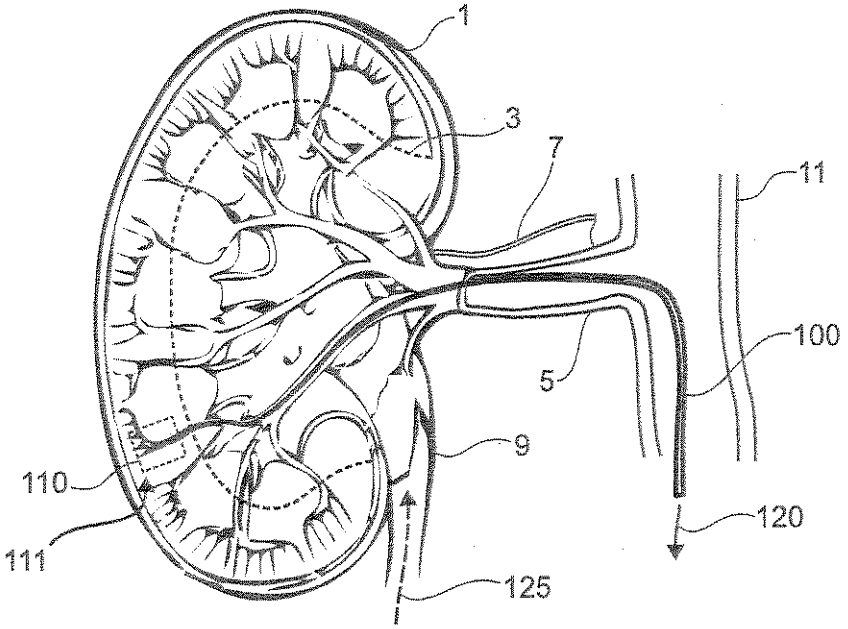

Fig 1b

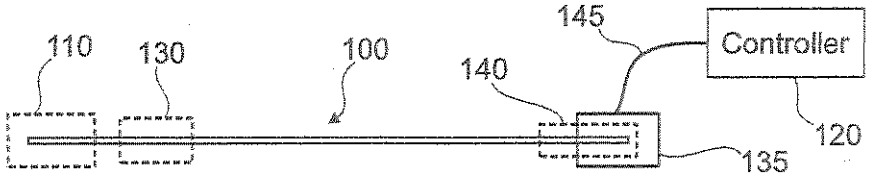

Fig 1c

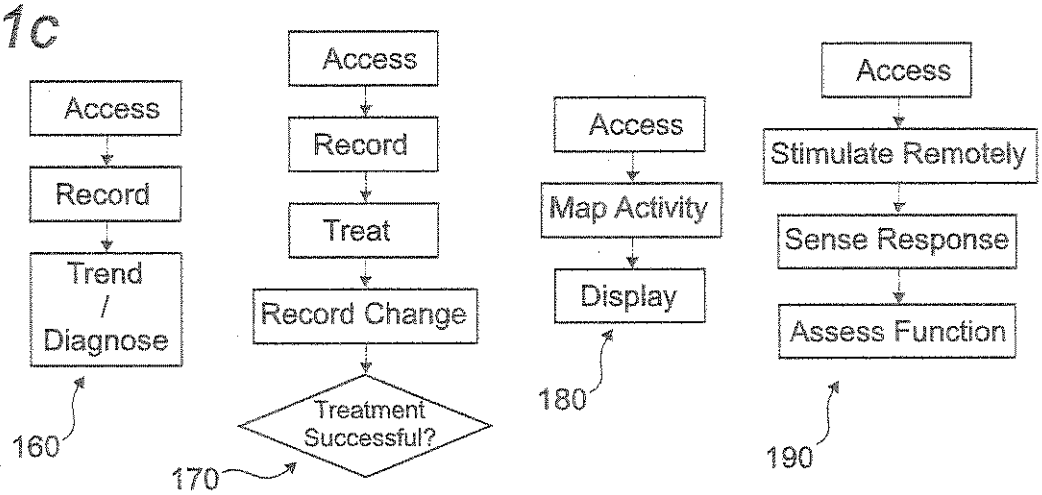

Fig 1d

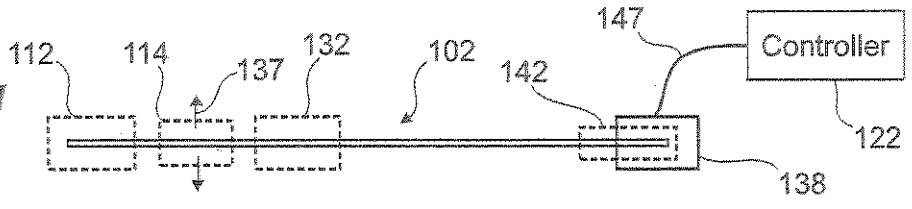

Fig 2a

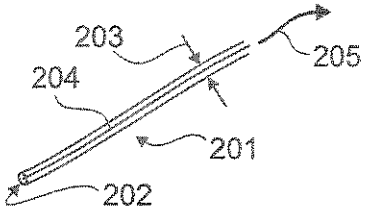

Fig 2b

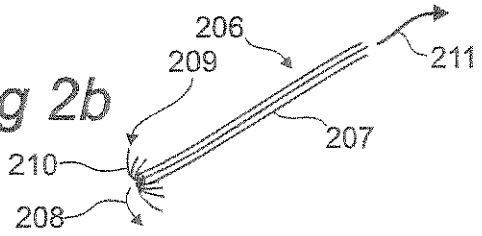

Fig 2c

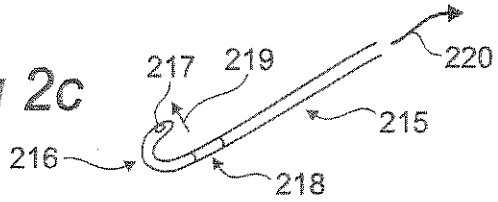

Fig 2d

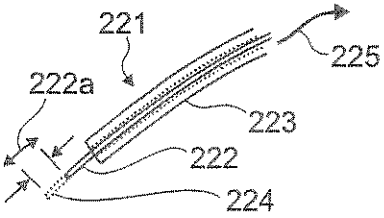

Fig 2e

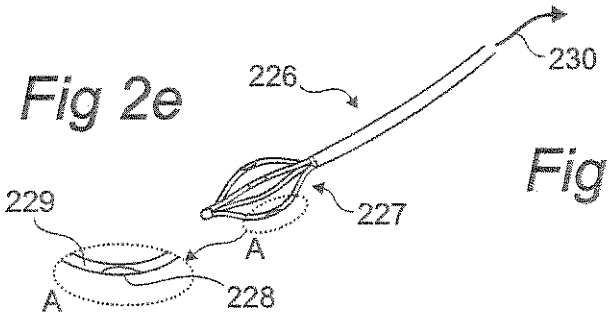

Fig 2f

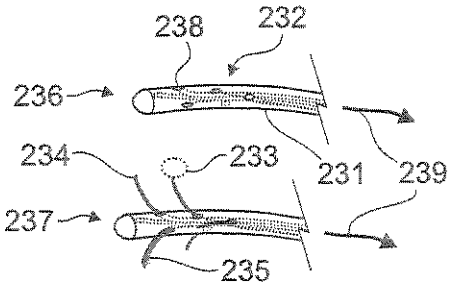

Fig 2g

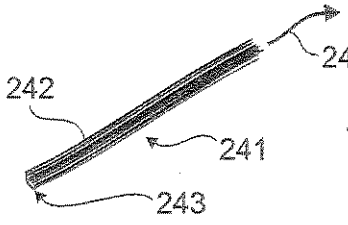

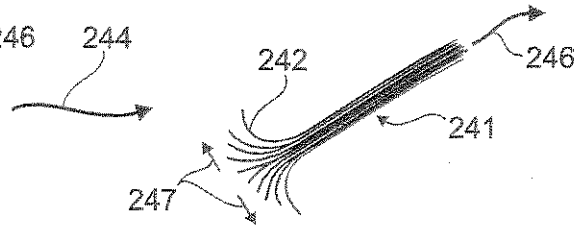

Fig 2h

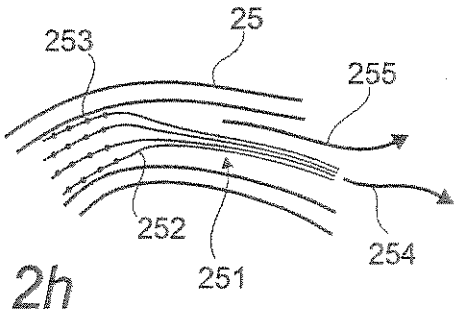

Fig 2i

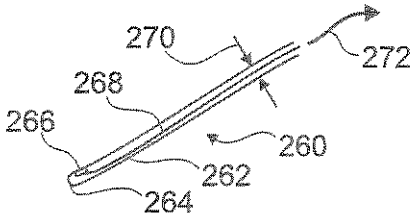

Fig 2j

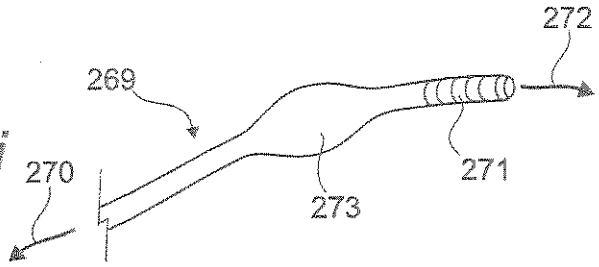

Fig 2k

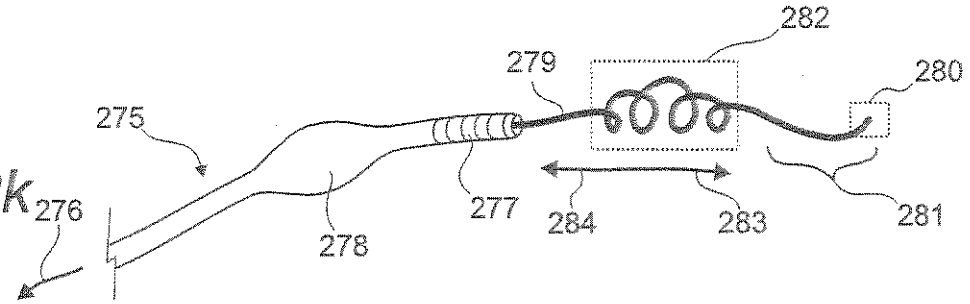

Fig 2l

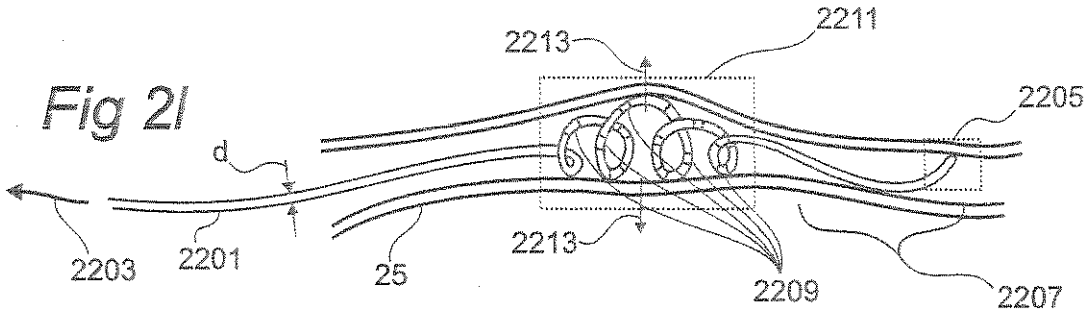

Fig 2m

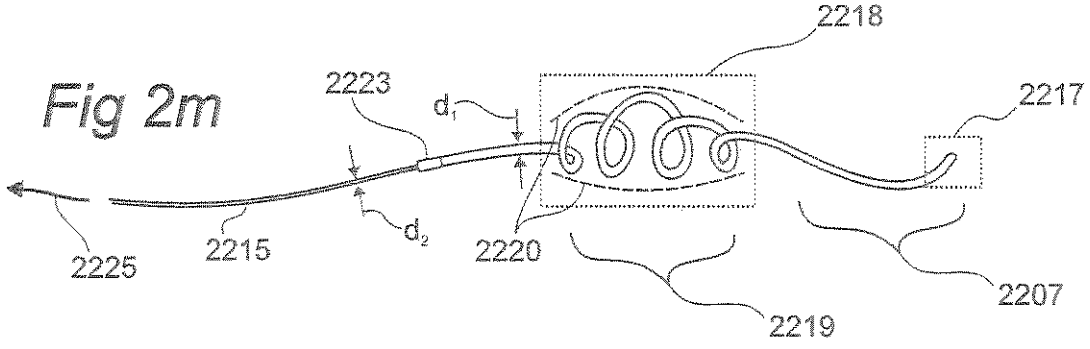

Fig 2n

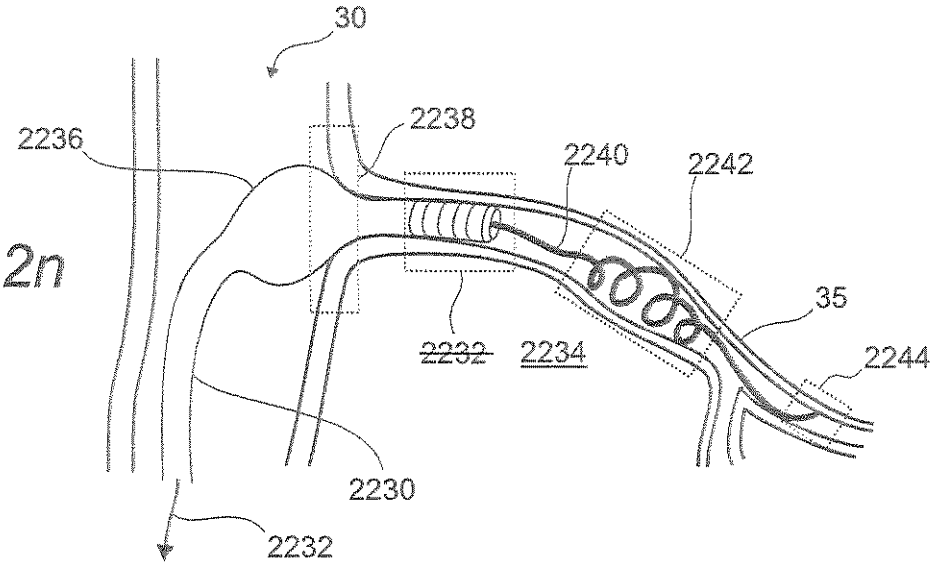

Fig 2o

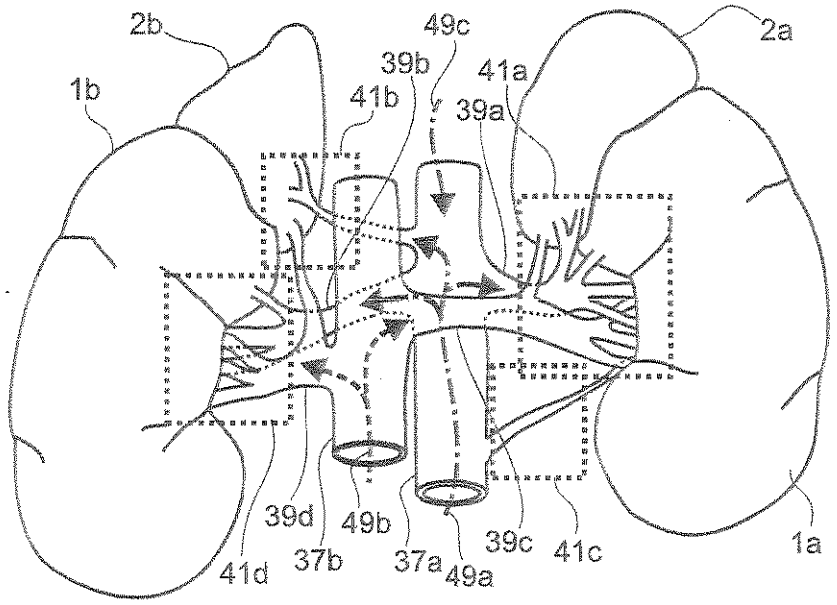

Fig 2p

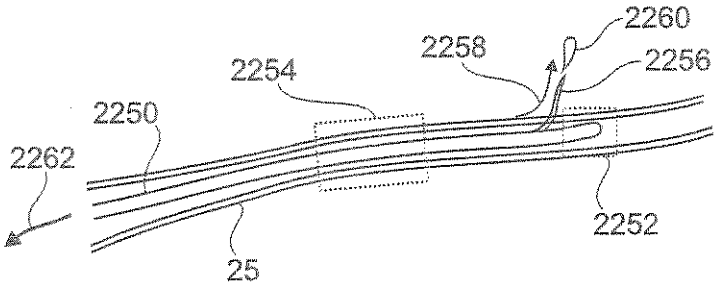

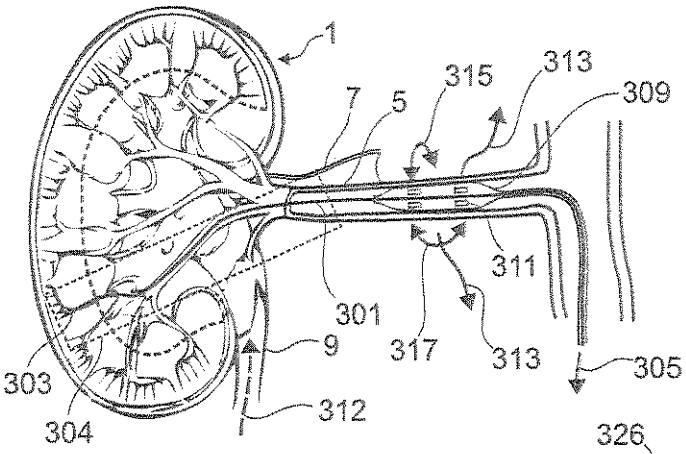

Fig 3a

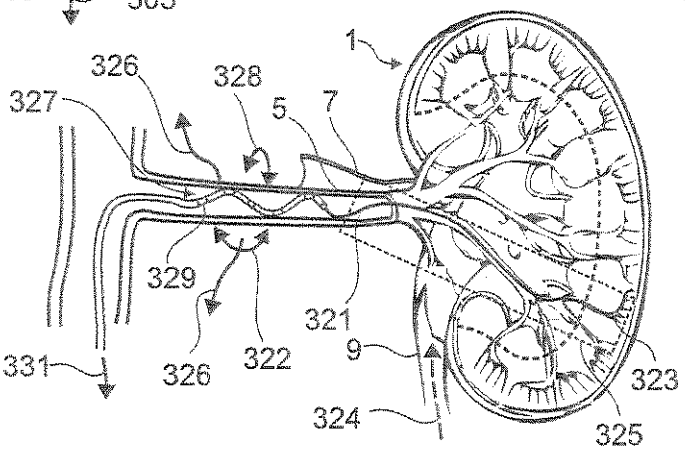

Fig 3b

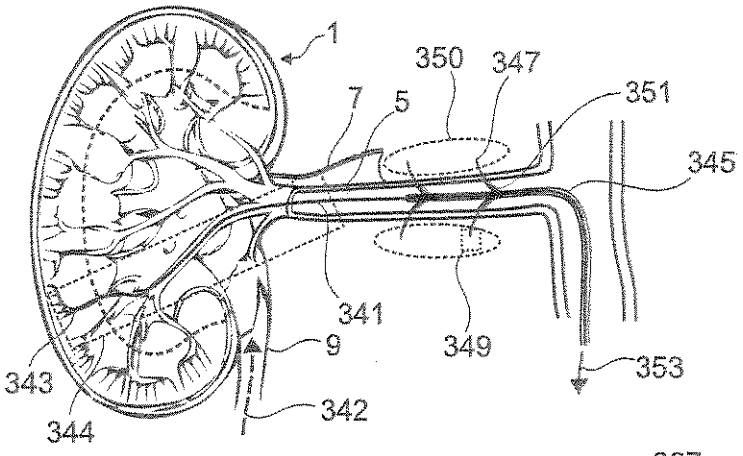

Fig 3c

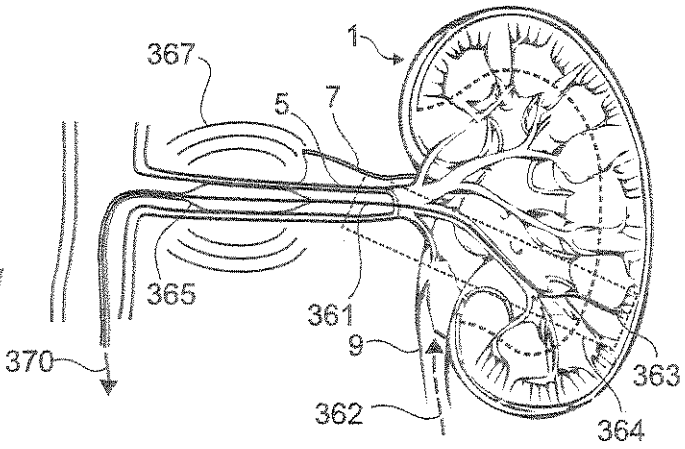

Fig 3d

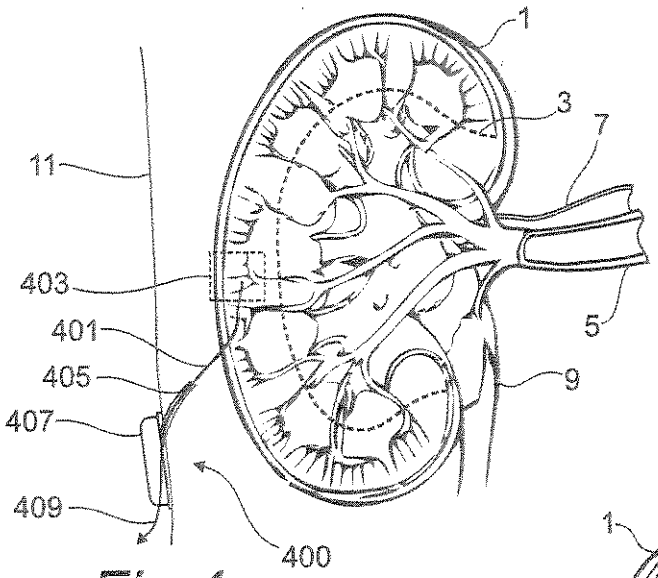

Fig 4a

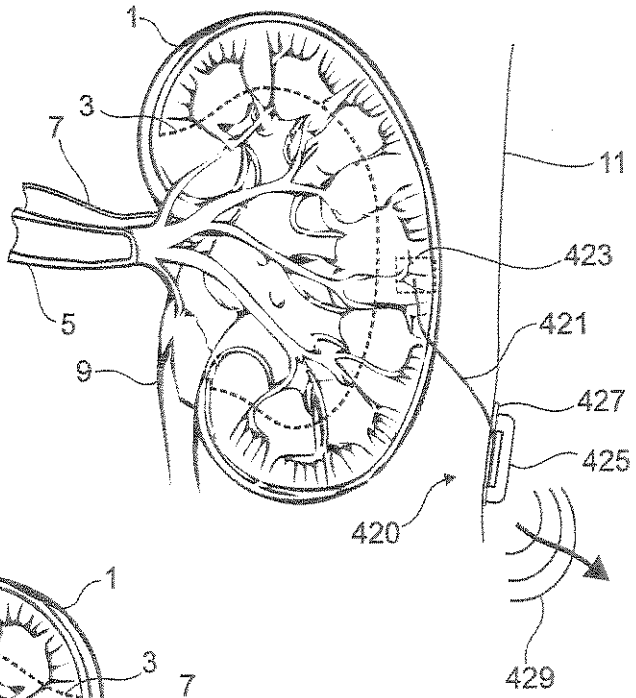

Fig 4b

Fig 4c

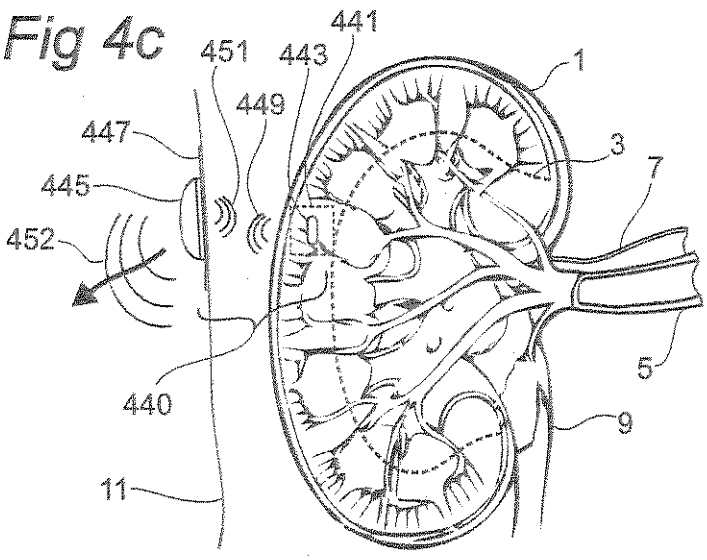

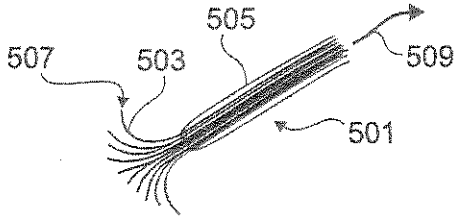

Fig 5a

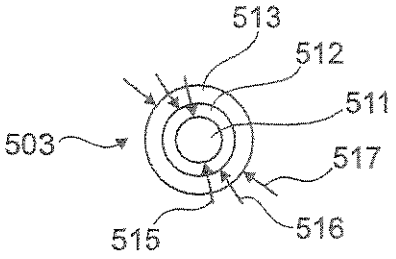

Fig 5b

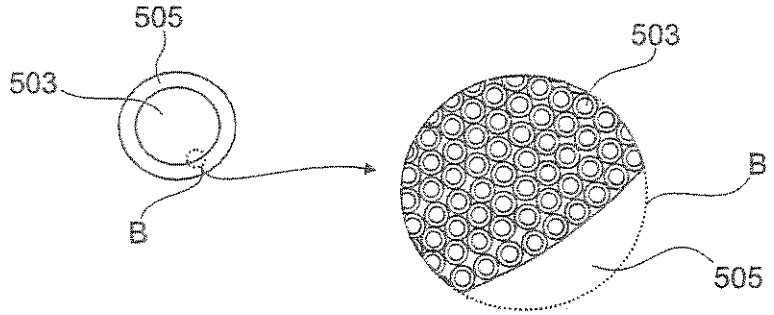

Fig 5c

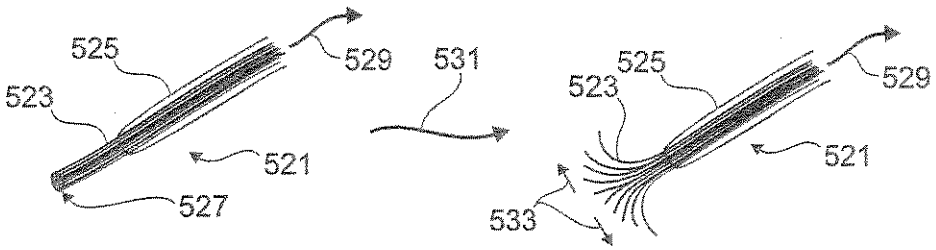

Fig 5d

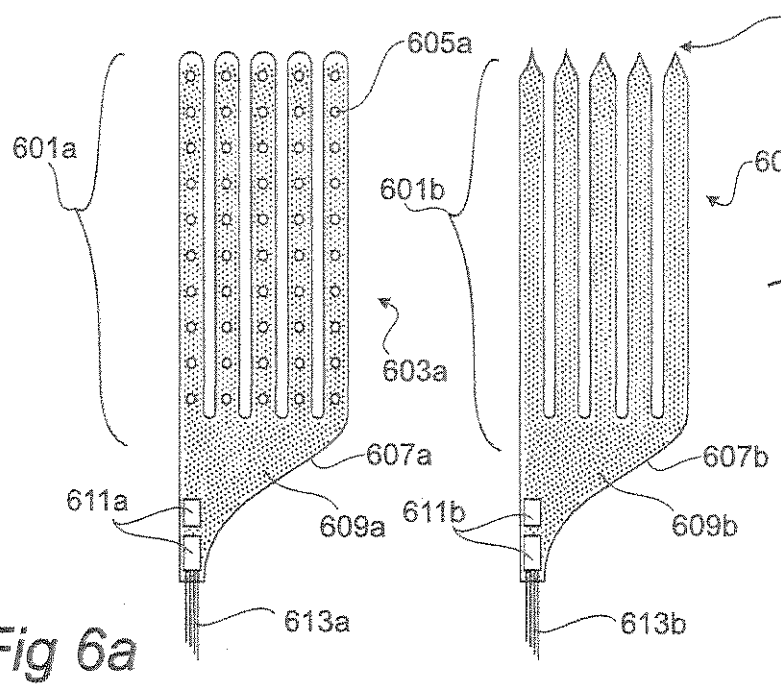

Fig 6a

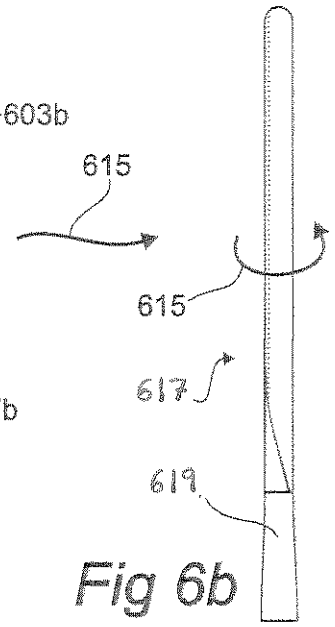

Fig 6b

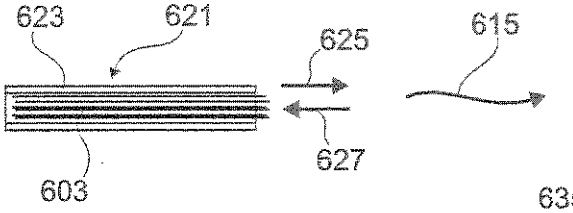

Fig 6c

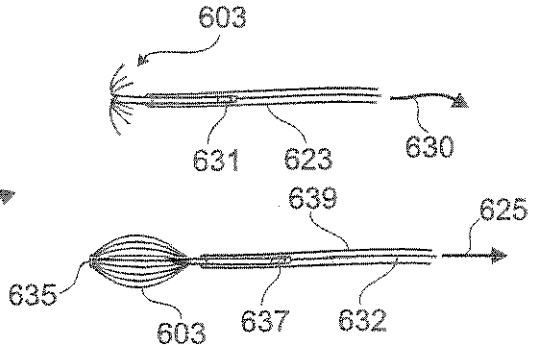

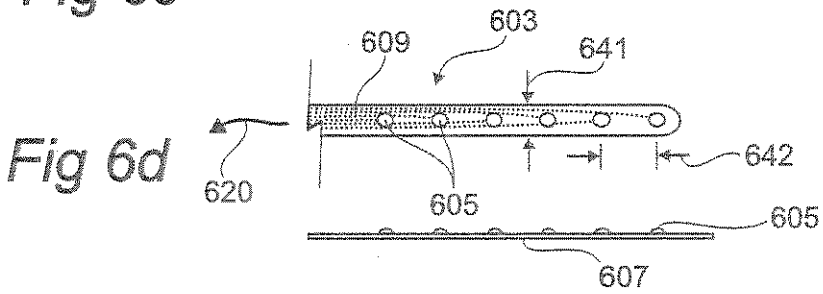

Fig 6d

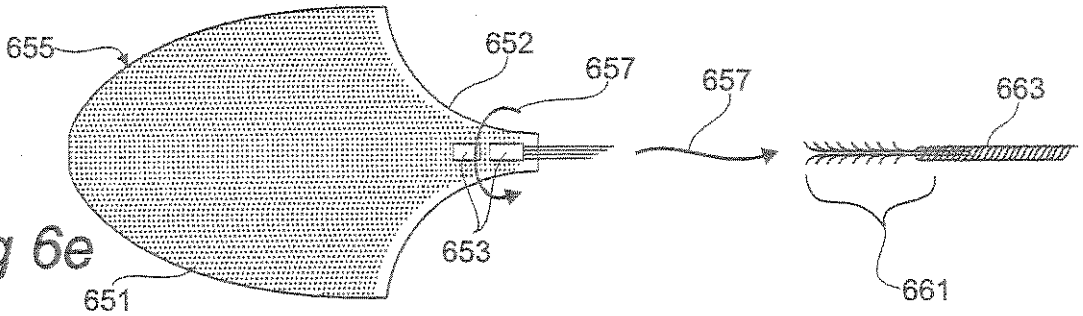

Fig 6e

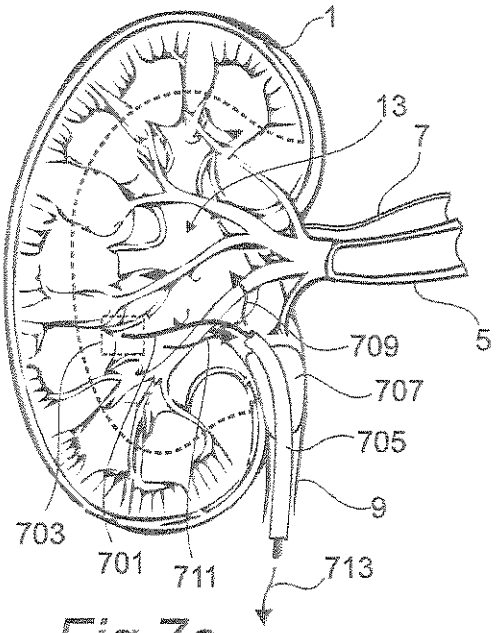

Fig 7a

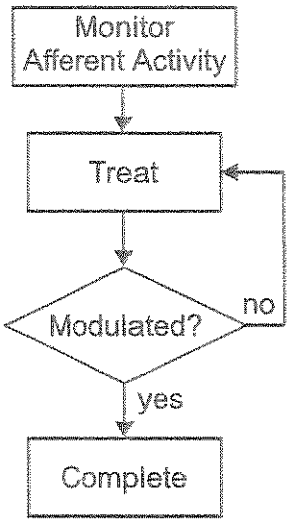

Fig 7b

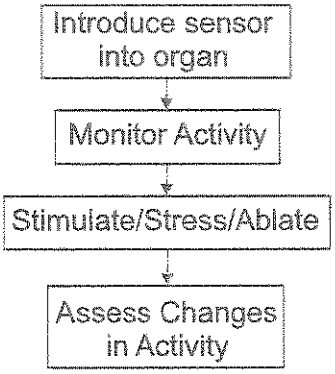

Fig 8a

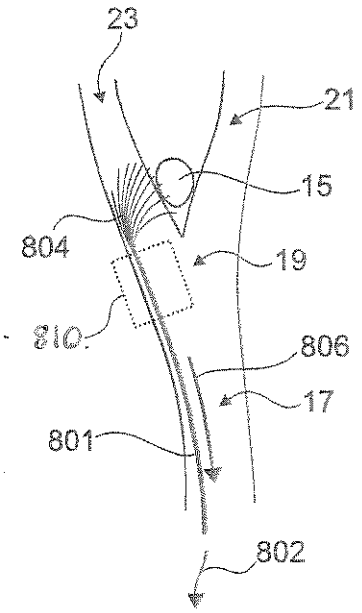

Fig 8b

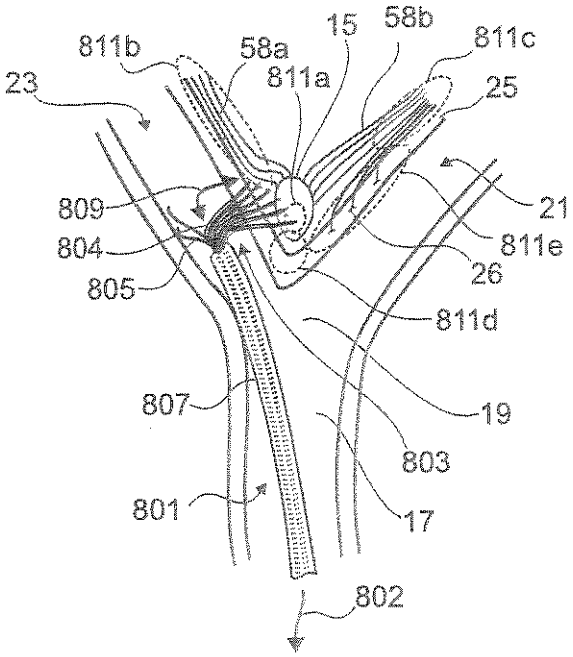

Fig 8c

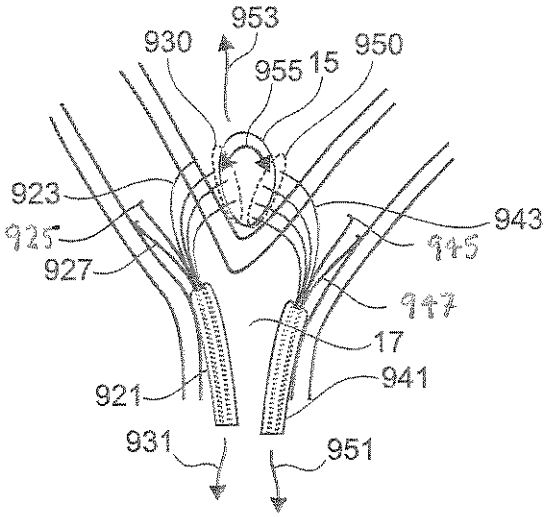

Fig 9

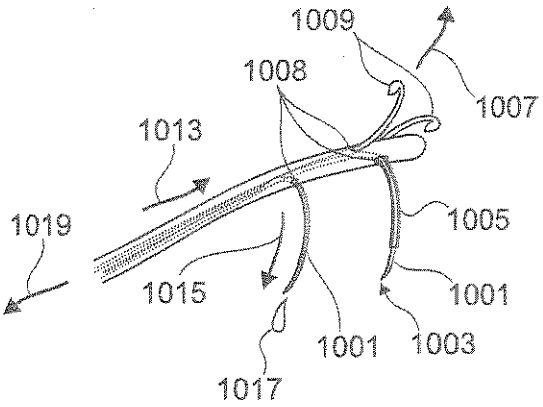

Fig 10

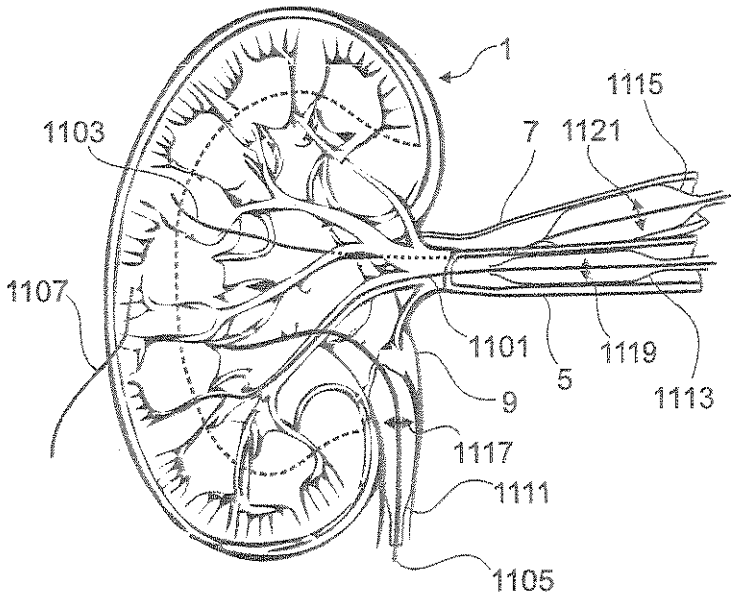

Fig 11

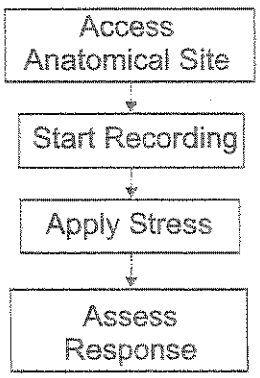

Fig 12