Alkoxylated amines as fuel additives

Description

The present invention describes alkoxylated amines as fuel additives for reducing injector deposits in direct injection gasoline engines.

EP 700985 A1 discloses using butoxylated polyetheramines of mono- or polyamines as additives in fuels for gasoline engines. The polyetheramines show a reduction in deposits at the intake valves. Polyetheramines are prepared by butoxylation of alkanols followed by reductive amination of the products obtained with mono- or polyamines. The polyetheramines therefore do not bear any free hydroxyl groups, but rather alkyl-capped butylene oxide chains.

WO 2011/076949 discloses the use of mixedly ethoxylated/propoxylated polyetheramines of monoamines in alcohol-containing gasoline fuels for improving fuel consumption and/or reducing deposits at intake valves and/or injection nozzle.

DE 10316871 A1 and EP 310875 A1 disclose using polyetheramines such as tridecanol or isotridecanol propoxylate and/or butoxylate ammonia reaction products in fuels.

It was an object of the present disclsoure to provide compounds with which the formation of deposits at injection nozzles can be avoided or reduced and/or existing deposits can be removed in direct injection gasoline engines.

In an aspect, there is provided the use of compounds (A) selected from the group consisting of formula (I)

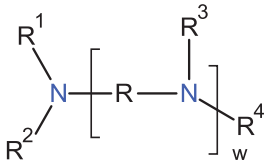

and formula (II)

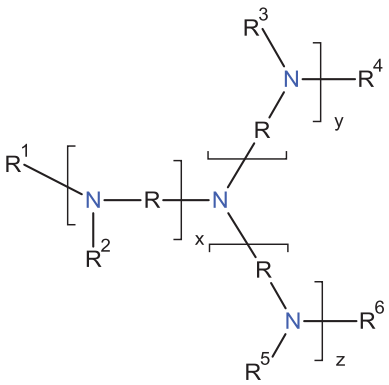

in which

R is a divalent organic radical, preferably an alkylene radical having 2 to 10 carbon atoms,

R^1, R^2, R^3, R^4, R^5 and R^6 are independently hydrogen or a monovalent organic radical or a $–[–X_i–]_n–H$ radical or R^1 and R^2 collectively and together with the nitrogen atom may form a five- to seven-membered ring, preferably hydrogen, an alkyl radical having 1 to 20 carbon atoms or a $–[–X_i–]_n–H$ radical,

w is a positive integer and
x, y and z are independently zero or a positive integer,

- in which n is a positive integer, and
- in which each X_i for i = 1 to n is independently selected from the group consisting of $-CH_2-CH_2-O-$, $-CH_2-CH(CH_3)-O-$, $-CH(CH_3)-CH_2-O-$, $-CH_2-C(CH_3)_2-O-$, $-C(CH_3)_2-CH_2-O-$, $-CH_2-CH(C_2H_5)-O-$, $-CH(C_2H_5)-CH_2-O-$ and $-CH(CH_3)-CH(CH_3)-O-$, preferably selected from the group consisting of $-CH_2-CH(CH_3)-O-$, $-CH(CH_3)-CH_2-O-$, $-CH_2-C(CH_3)_2-O-$, $-C(CH_3)_2-CH_2-O-$, $-CH_2-CH(C_2H_5)-O-$, $-CH(C_2H_5)-CH_2-O-$ and $-CH(CH_3)-CH(CH_3)-O-$, more preferably selected from the group consisting of $-CH_2-CH(CH_3)-O-$, $-CH(CH_3)-CH_2-O-$, $-CH_2-C(CH_3)_2-O-$, $-C(CH_3)_2-CH_2-O-$, $-CH_2-CH(C_2H_5)-O-$ and $-CH(C_2H_5)-CH_2-O-$ and most preferably selected from the group consisting of $-CH_2-CH(C_2H_5)-O-$, $-CH(C_2H_5)-CH_2-O-$, $-CH_2-CH(CH_3)-O-$ and $-CH(CH_3)-CH_2-O-$, and especially selected from the group consisting of $-CH_2-CH(CH_3)-O-$ and $-CH(CH_3)-CH_2-O-$,

with the proviso that

- the sum total of x, y and z is non-zero,

- at least one of the R^1, R^2, R^3, R^4, R^5 and R^6 radicals is not hydrogen and

- at least one of the R^1, R^2, R^3, R^4, R^5 and R^6 radicals represents a $–[–X_i–]_n–H$ radical,

in gasoline fuels for avoidance and/or reduction of the formation of deposits at injection nozzles in direct injection gasoline engines and/or removing and/or reducing existing deposits at injection nozzles in direct injection gasoline engines.

In another aspect, there is provided a fuel additive concentrate comprising
(A) at least one compound of the formula (I), (II) or (III) as defined above,
(B1) at least one compound (B1a) which is a polyisobuteneamine obtainable by hydroformylation and subsequent reductive amination, most preferably with ammonia, of polyisobutene with Mn = 300 to 5000,

(B2) at least one carrier oil selected from the group consisting of polyolefins, (poly)esters, (poly)alkoxylates, polyethers, aliphatic polyetheramines, alkylphenol-started polyethers, alkylphenol-started polyetheramines and carboxylic esters of long-chain alkanols, and

(B3) at least one corrosion inhibitor selected from the group consisting of mono-, di- and polycarboxylic acids having at least 12 carbon atoms, ammonium salts of organic carboxylic acids and heterocyclic aromatics.

In another aspect, there is provided a fuel composition comprising

(A) at least one compound of the formula (I), (II) or (III), preferably (I) or (III) and more preferably (III), as defined above,

(B1) at least one compound having detergent action, preferably at least one compound (B1a), more preferably at least one compound (B1a) which is a polyisobuteneamine obtainable by hydroformylation and subsequent reductive amination, most preferably with ammonia, of polyisobutene with Mn = 300 to 5000,

(B2) at least one carrier oil selected from the group consisting of polyolefins, (poly)esters, (poly)alkoxylates, polyethers, aliphatic polyetheramines, alkylphenol-started polyethers, alkylphenol-started polyetheramines and carboxylic esters of long-chain alkanols,

(B3) at least one corrosion inhibitor selected from the group consisting of mono-, di- and polycarboxylic acids having at least 12 carbon atoms, ammonium salts of organic carboxylic acids and heterocyclic aromatics,

(C) at least one gasoline fuel, and

optionally at least one alcohol, preferably at least one C_1-C_4-alkanol, more preferably methanol or ethanol, most preferably ethanol.

The object was achieved by the use of compounds (A) selected from the group consisting of formula (I)

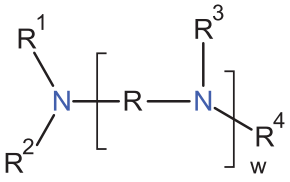

and formula (II)