have on conditional release of the biologically active compound or derivative thereof at the desired site of action from a Ligand Drug Conjugate prepared from that Drug Linker compound, loss of stereochemical control presents problems for manufacturing attributable to heterogeneity in the resulting drug linker moieties of the Ligand Drug Conjugate. The present invention provides, *inter alia*, solutions to both of those previously unknown problems with self-stabilizing Linker Units.

SUMMARY

[0008] Principle embodiments of the disclosure are Ligand Drug Conjugate (LDC) compositions that are represented by Formula 1 and/or Formula 2.

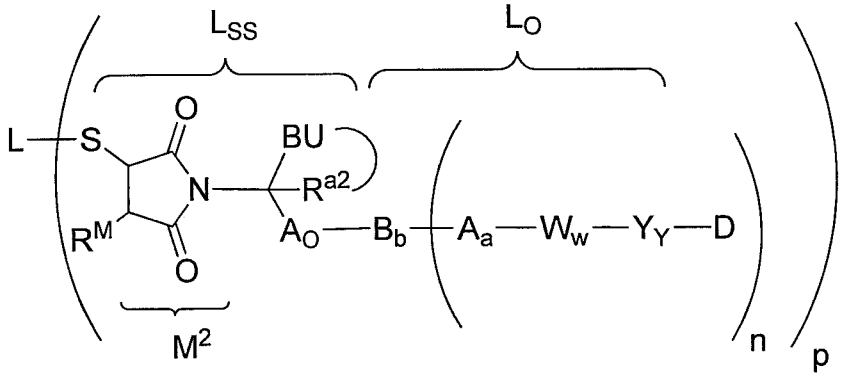

(Formula 1)

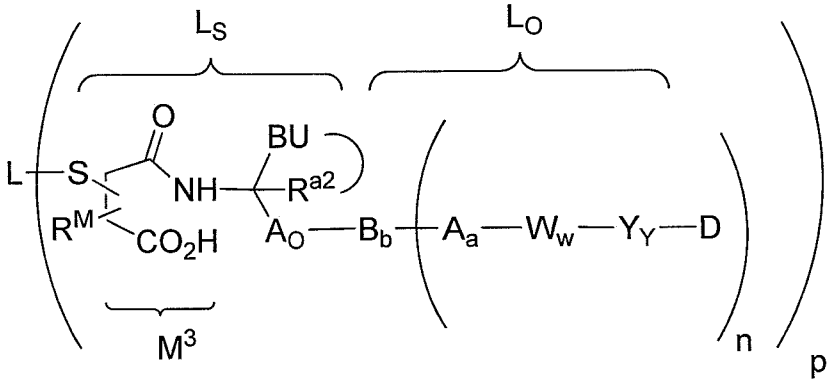

(Formula 2)

[0009] or pharmaceutically acceptable salt(s) thereof, wherein L is a Ligand Unit, S is a sulfur atom of the Ligand Unit, which in Formula 2 is bonded to the carbon α or β to the shown carboxylic acid functional group of its succinic acid amide (M^3) moiety; R^M is hydrogen or an optionally substituted C_1-C_6 alkyl, which in Formula 2 is bonded to the saturated carbon adjacent to the carbon substituted by L-S-, subscripts a and b independently are 0 or 1, indicating the absence or presence, respectively, of A or B;

amine nitrogen or the basic nitrogen of the exocyclic tertiary amine or aminoalkyl is optionally protonated, or

[0013] BU is a Basic Unit and R^{a2} is an optionally substituted C_1-C_{12} alkyl formally cyclized to the basic nitrogen atom of an acyclic Basic Unit of corresponding structure to that of Formula 1 and/or Formula 2 in which the solid curved lined between BU and R^{a2} is absent, or to a carbon atom of an optionally substituted C_1-C_{12} alkylene bearing that basic nitrogen atom, both of which comprise the acyclic Basic Unit, thus forming an optionally substituted spiro C_3-C_{20} heterocyclo incorporating the basic nitrogen as a skeletal heteroatom, or an optionally substituted C_3-C_{20} carbocyclo substituted directly by the basic nitrogen atom, or substituted indirectly by the basic nitrogen atom through an optionally substituted C_1-C_{12} alkylene remaining from said formal cyclization and whose structure is dependent on the site of cyclization, so in either instance a cyclic Basic Unit (cBU) is defined, as indicated by the solid curved line; and wherein the basic amine nitrogen is optionally protonated or suitably protected by a nitrogen protecting group, dependent on the degree of substitution of the basic nitrogen upon formal cyclization; and

[0014] D is a Drug Unit or a quaternized Drug Unit represented as D^+ so that D^+ replaces D in Formula 1 and Formula 2; subscript p is an average drug linker moiety loading when subscript n is other than 1 or an average drug loading when subscript n is 1, wherein subscript p in either instance is a number ranging from 1 to 24; wherein when subscript w is 1, which indicates the presence of a Cleavable Unit, enzymatic or non-enzymatic cleavage of that Unit initiates release of a biologically active compound or derivative thereof from a Ligand Drug Conjugate compound of the composition, or when subscript w is 0, which indicates the absence of a Cleavable Unit, enzymatic or non-enzymatic cleavage of the bond between the indicated L_{SS} and L_O moieties in Formula 1 or the bond between the indicated L_S and L_O moieties in Formula 2, when L_O is present, wherein L_{SS} is a self-stabilizing linker, L_S is a self-stabilized linker and L_O is an optional secondary linker, or the bond between L_{SS} or L_S and D, when L_O is absent, initiates release of D or D^+ as a biologically active compound or derivative thereof from a Ligand Drug Conjugate compound of the composition, wherein the Ligand Drug Conjugate compound corresponds in structure to that of Formula 1 or Formula 2 in which p is replaced by p', wherein p' is an integer ranging from 1 to 24.

[0014a] In one aspect, there is provided a Ligand Drug Conjugate (LDC) composition, wherein the composition is represented by the structures of Formula 1 and/or Formula 2:

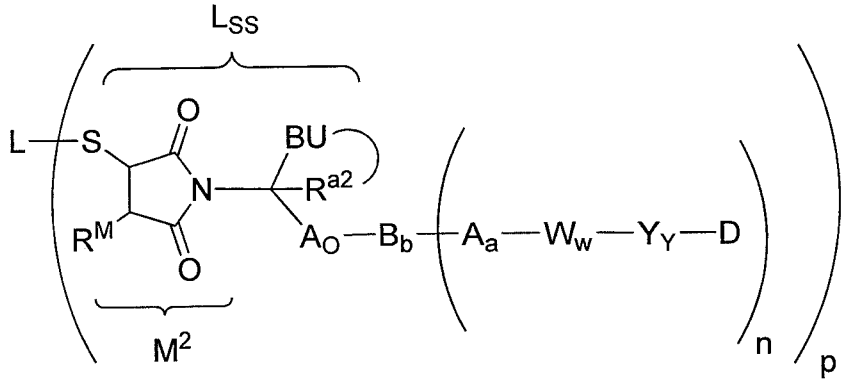

(Formula 1)

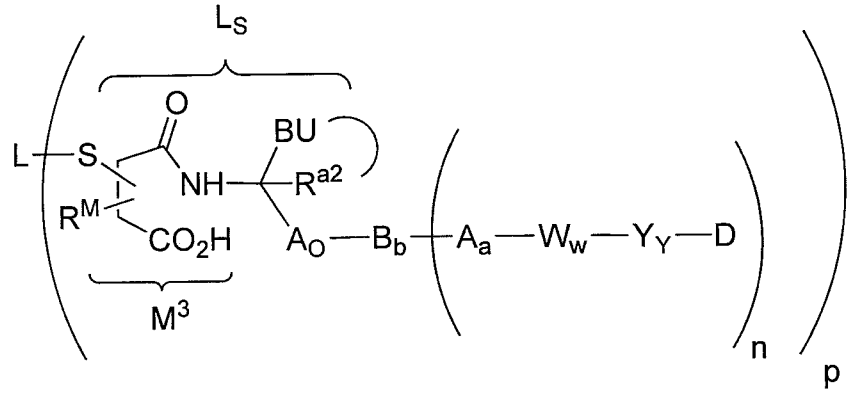

(Formula 2)

or a pharmaceutically acceptable salt thereof, wherein

L is a Ligand Unit;

S is a sulfur atom of the Ligand Unit, which in Formula 2 is bonded to the carbon atom α or β to the carboxylic acid functional group of the indicated succinic acid amide (M^3) moiety;

R^M is hydrogen or an optionally substituted C_1-C_6 alkyl, which in Formula 2 is bonded to the saturated carbon atom adjacent to the carbon substituted by L-S-;

subscript w is 0 or 1;

subscript n is 1, 2, 3 or 4;

subscript a is 0 or 1;

subscript b is 0 or 1,

provided that subscript b is 1 when subscript n is 2, 3 or 4 and subscript b is 0 when subscript n is 1;

A is a first optional Stretcher Unit;

A_O is a second optional Stretcher Unit;

B is an optional Branching Unit; and

wherein each of A, A_O and B is an independently selected single unit or is optionally comprised or consists of two, three or four independently selected subunits;

Y is optionally present as an optionally substituted heteroatom, an optionally substituted functional group or a Spacer Unit, independently selected when subscript y is 2 so that Y_y is –Y-Y'-, wherein Y and Y' are, respectively, a first and second optionally substituted heteroatom, optionally substituted functional group or Spacer Unit;

subscript w is 0 or 1, wherein W is absent when subscript w is 0, or when subscript w is 1 then

W is a Peptide Cleavable Unit, or

W is a Glucuronide Unit of formula –Y(W')-, wherein W' represents a carbohydrate moiety with glycosidic bonding to Y through a optionally substituted heteroatom;

provided that Y bonded to W' is a self-immolative Spacer Unit;

subscript y is 0, 1 or 2,

provided that subscript y is 1 or 2, when W is a Glucuronide Unit, in which instance subscript y is inclusive of the self-immolative Spacer Unit bonded to W', except that subscript y is 1 and Y of the Glucuronide Unit is bonded to D when D is a quaternized Drug Unit (D^+), and

provided that subscript y is 1 and Y is a self-immolative Spacer Unit bonded to D and W when W is a Peptide Cleavable Unit and D is a quaternized Drug Unit (D^+);

BU is a Basic Unit and R^{a2} is an optionally substituted C_1-C_{12} alkyl group that together with the carbon atom to which both are attached, as represented by the solid curved line, define a cyclic Basic Unit having an optionally substituted spiro C_3-C_{20} heterocyclo containing a skeletal basic nitrogen atom of a secondary or tertiary amine functional group, an optionally substituted spiro C_3-C_{20} carbocyclo with exocyclic substitution by an optionally substituted basic nitrogen atom of a basic secondary or tertiary amine functional group, or an optionally substituted spiro C_3-C_{20} carbocyclo having exocyclic substitution by an optionally substituted C_1-C_{12} aminoalkyl in which the optionally substituted basic nitrogen atom of the amino moiety of the aminoalkyl is that of a primary, secondary or tertiary amine functional group, wherein the optionally substituted basic nitrogen atom of the exocyclic amine or aminoalkyl along with its optionally substituted alkyl moiety is attributable to BU, or

BU is a Basic Unit and R^{a2} is an optionally substituted C_1-C_{12} alkyl formally cyclized to the basic nitrogen atom of an acyclic Basic Unit of corresponding structure to Formula 1 and/or Formula 2 in which the solid curved lined between BU and R^{a2} is absent, or to a carbon atom of an optionally substituted C_1-C_{12} alkylene bearing that basic nitrogen atom, both of which comprise the acyclic Basic Unit, thus forming an optionally substituted spiro C_3-C_{20} heterocyclo, which incorporates the basic nitrogen atom as a skeletal heteroatom, or an optionally substituted spiro C_3-C_{20} carbocyclo substituted directly by the basic nitrogen atom, or substituted indirectly by the basic nitrogen atom through an optionally substituted C_1-C_{12} alkylene moiety remaining from said formal cyclization and whose structure is dependent on the site of cyclization, so in either instance a cyclic Basic Unit (cBU) is defined, as indicated by the solid curved line;

and

wherein the basic nitrogen atom of the cyclic Basic Unit is optionally suitably protected by a nitrogen protecting group, dependent on the degree of substitution of the basic nitrogen atom, or is optionally protonated;

subscript p ranges from 1 to 24;

D is a Drug Unit, or

D is a quaternized Drug Unit represented as D^+ so that D^+ replaces D in Formula 1 and Formula 2 provided that subscript w is 1;

wherein if subscript w is 1, activation of the Glucuronide Unit by a glycosidase or activation of the Peptide Cleavable Unit by a protease within a compound of the Ligand Drug Conjugate composition initiates release of the Drug Unit or quaternized Drug Unit as a biologically active compound or derivative thereof from that Ligand Drug Conjugate compound,

or if subscript w is 0, a biologically active compound or derivative thereof is released from a Ligand Drug Conjugate compound of the composition on enzymatic or non-enzymatic cleavage of a bond within a drug linker moiety of the Conjugate compound that attaches Y_y-D to the indicated L_{SS} or L_S structure of that drug linker moiety; and

wherein the Ligand Drug Conjugate compound corresponds in structure to Formula 1 or Formula 2 in which p is replaced by p', wherein p' is an integer ranging from 1 to 24.

[0015] In some embodiments, A_O is present and is comprised or consists of a Hydrolysis Enhancing [HE] Unit and W is a Peptide Cleavable Unit and subscript y is 0, 1 or 2, or W is a Glucuronide Unit of structure –Y(W')-, so that subscript y is 1 or 2 in Formula 1,

Formula 2, wherein Y is a self-immolative Spacer Unit and W' is a carbohydrate moiety (Su) with attachment to Y by glycosidic bonding through an optionally substituted heteroatom (E') wherein D/D^+ is attached directly to Y when subscript y is 1 or D is attached indirectly to Y through bonding to a second Spacer Unit designated Y' when subscript y is 2.

[0016] In some of those embodiments in which subscript y is 2, Y and Y' are both self-immolative Spacer Units, which undergo self-immolation upon enzymatic processing of the Peptide Cleavable Unit or Glucuronide Unit as, for example, when one self-immolative Spacer Unit (Y) is capable of 1,4- or 1,6-elimination and the other self-immolative Spacer Unit (Y') is a methylene carbamate unit or a carbamate functional group capable of CO_2 elimination as described herein.

[0017] In other embodiments, only one Y of Y_y undergoes self-immolation upon conditional enzymatic processing of the Peptide or Glucuronide Unit to release D, when subscript y is 1, or to release Y'-D, when subscript y is 2, as a biologically active compound or derivative thereof, which sometimes are referred to as a drug compound or active drug moiety, respectively. In some of those embodiments Y' of –Y'-D also can undergo self-immolation to release D as a biologically active compound or derivative thereof. In still other embodiments, W is a Cleavable Unit that is not reliant upon enzymatic cleavage for release of the biologically active compound or derivative thereof and in some instances is acted upon non-enzymatically for that release.

[0018] In preferred embodiments, the functionality of BU in acyclic form to effect self-stabilization of a corresponding Ligand Drug Conjugate composition by conversion of Formula 1 to Formula 2 in which the curved dashed line is not present is substantially retained by cBU in a majority of compounds in the LDC composition of Formula 1 in which the curved dashed line is present.

[0019] In other preferred embodiments, the targeting moiety of the Ligand Drug Conjugate is that of an antibody, sometimes referred to as an antibody Ligand Unit, thereby defining an Antibody Drug Conjugate (ADC) composition, and the targeted moiety recognized by its antibody Ligand Unit is an cell-surface antigen of targeted abnormal cells or normal cells peculiar to and in the vicinity of the abnormal cells, wherein the antigen so bound from said recognition in some embodiments is capable of cellular internalization of a Conjugate compound of the ADC composition, wherein the antigen is preferentially present on the abnormal cells or nearby normal cells in comparison to normal cells distant from the abnormal cells.

[0020] In any one of those preferred embodiments, the released biologically active compound or derivative thereof exerts a therapeutic effect due to its biological activity at the desired site of action.

[0021] Other principle embodiments of the disclosure provide for compounds having the structure of Formula I:

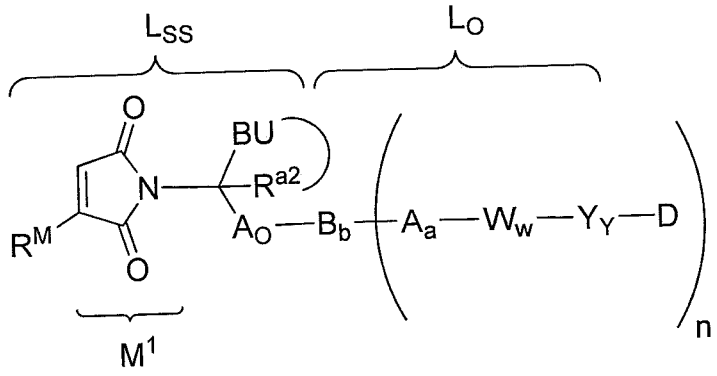

(Formula I),

[0022] wherein L_{SS}, as indicated, is a self-stabilizing primary linker, L_O, as indicated, is an optional secondary linker and wherein the variable groups of Formula I are as defined for Formula 1.

[0023] In any one of the above embodiments in which BU is cyclized to R^{a2} though its basic amine nitrogen so that a cyclized Basic Unit (cBU) having a skeletal secondary nitrogen atom is defined, the secondary amine functional group from cyclization to that heteroatom may be suitably protected or may be in protonated form. In any one of the above embodiments when BU is cyclized to R^{a2} though its basic nitrogen atom so that a cBU having a tertiary amine functional group is defined, that amine functional group may be in protonated form.

[0024] In any one of the above embodiments in which an acyclic Basic Unit (aBU) is formally cyclized to R^{a2} through its optionally substituted C_1-C_{12} alkyl moiety, that alkylene moiety is incorporated in whole or in part into an optionally substituted spiro C_3-C_{20} carbocyclo having substitution by a basic amine functional group attributable to aBU through its basic nitrogen atom, directly or indirectly through any intervening optionally substituted acyclic alkylene moiety remaining from said incorporation, wherein the basic amine nitrogen atom is that of a primary, secondary, or tertiary amine functional group, thus defining a cyclic Basic Unit (cBU) in which the degree of substitution of the basic amine nitrogen of that functional group prior to said formal cyclization is retained, wherein that basic amine functional group may be in protected or protonated form, dependent on the degree of substitution of its basic nitrogen atom.

[0025] In other embodiments, the disclosure provides for Ligand Drug Conjugate compositions prepared from contacting a Formula I compound with a targeting agent having a reactive thiol functional group under suitable conditions to effect condensation of a sulfur atom of that functional group with its maleimide moiety so as to provide a composition represented by the structure of Formula 1, which converts in whole or at least in part to Formula 2.

[0025a] In another aspect, there is provided a pharmaceutically acceptable formulation or precursor thereof comprising a Ligand Drug Conjugate composition disclosed herein and one, two, three or more excipients.

[0025b] In another aspect, there is provided use of a Ligand Drug Conjugate composition disclosed herein in the manufacture of a medicament for treating a hyperproliferative disease or condition in a patient having said disease or condition.

[0025c] In another aspect, there is provided use of a Ligand Drug Conjugate composition disclosed herein in the manufacture of a medicament for inhibiting the multiplication of a tumor cell or cancer cell, or causing apoptosis in a tumor or cancer cell.

[0025d] In another aspect, there is provided a method of inhibiting the multiplication of a tumor cell or cancer cell, or causing apoptosis in a tumor or cancer cell, by exposing said cell to an effective amount of a Ligand Drug Conjugate composition disclosed herein.

[0025e] In another aspect, there if provided a Drug Linker compound, wherein the compound has the structure of:

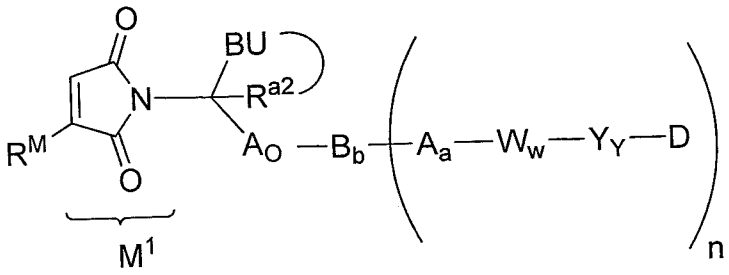

or a salt thereof, wherein

R^M is hydrogen or an optionally substituted C_1-C_6 alkyl, which in Formula 2 is bonded to the saturated carbon adjacent to the carbon substituted by L-S-;

subscript w is 0 or 1;

subscript n is 1, 2, 3 or 4;

subscript a is 0 or 1;

subscript b is 0 or 1,

provided that subscript b is 1 when subscript n is 2, 3 or 4 and subscript b is 0 when subscript n is 1;

A is a first optional Stretcher Unit;

A_O is a second optional Stretcher Unit;

B is an optional Branching Unit; and

wherein each of A, A_O and B is an independently selected single unit or is optionally comprised or consists of two, three or four independently selected subunits;

Y is optionally present as an optionally substituted heteroatom, an optionally substituted functional group or a Spacer Unit, independently selected when subscript y is 2 so that Y_y is –Y-Y'-, wherein Y and Y' are respectively a first and second optionally substituted heteroatom, optionally substituted functional group or Spacer Unit;

subscript w is 0 or 1, wherein W is absent when subscript w is 0, or when subscript w is 1 then

W is a Peptide Cleavable Unit, or

W is a Glucuronide Unit of formula –Y(W')-, wherein W' represents a carbohydrate moiety with glycosidic bonding to Y through a optionally substituted heteroatom;

provided that Y bonded to W' is a self-immolative Spacer Unit;

subscript y is 0, 1 or 2,

provided that subscript y is 1 or 2, when W is a Glucuronide Unit, in which instance subscript y is inclusive of the self-immolative Spacer Unit bonded to W', except that subscript y is 1 and Y of the Glucuronide Unit is bonded to D when D is a quaternized Drug Unit (D^+), and

provided that subscript y is 1 and Y is a self-immolative Spacer Unit bonded to D and W when W is a Peptide Cleavable Unit and D is a quaternized Drug Unit (D^+);

BU is a Basic Unit and R^{a2} is an optionally substituted C_1-C_{12} alkyl group that together with the carbon atom to which both are attached, as represented by the solid curved line, define a cyclic Basic Unit having an optionally substituted spiro C_3-C_{20} heterocyclo containing a skeletal basic nitrogen atom of a secondary or tertiary amine functional group, an optionally substituted spiro C_3-C_{20} carbocyclo with exocyclic substitution by an optionally substituted basic nitrogen of a basic secondary or tertiary amine functional group, or an optionally substituted spiro C_3-C_{20} carbocyclo having exocyclic substitution by an optionally substituted C_1-C_{12} aminoalkyl in which the optionally substituted basic nitrogen atom of the amino moiety of the aminoalkyl is that of

a primary, secondary or tertiary amine functional group, wherein the optionally substituted basic nitrogen atom of the exocyclic amine or aminoalkyl along with its optionally substituted alkyl moiety is attributable to BU, or

BU is a Basic Unit and R^{a2} is an optionally substituted C_1-C_{12} alkyl formally cyclized to the basic nitrogen atom of an acyclic Basic Unit of corresponding structure to Formula 1 and/or Formula 2 in which the solid curved lined between BU and R^{a2} is absent, or to a carbon atom of an optionally substituted C_1-C_{12} alkylene bearing that basic nitrogen atom, both of which comprise the acyclic Basic Unit, thus forming an optionally substituted spiro C_3-C_{20} heterocyclo, which incorporates the basic nitrogen atom as a skeletal heteroatom, or an optionally substituted C_3-C_{20} carbocyclo substituted directly by the basic nitrogen atom, or substituted indirectly by the basic nitrogen atom through an optionally substituted C_1-C_{12} alkylene moiety remaining from said formal cyclization and whose structure is dependent on the site of cyclization, so in either instance a cyclic Basic Unit (cBU) is defined, as indicated by the solid curved line;

and

wherein the basic nitrogen atom of the cyclic Basic Unit is optionally suitably protected by a nitrogen protecting group, dependent on the degree of substitution of the basic nitrogen atom, or is optionally protonated;

D is a Drug Unit, or

D is a quaternized Drug Unit represented as D^+ so that D^+ replaces D in Formula 1 and Formula 2, provided that subscript w is 1;

wherein if subscript w is 1, activation of the Glucuronide Unit by a glycosidase or activation of the Peptide Cleavable Unit by a protease initiates release of the Drug Unit or quaternized Drug Unit as a biologically active compound or derivative thereof from the Drug Linker compound or from a Ligand Drug Conjugate compound of a Ligand Drug Conjugate composition prepared from the Drug Linker compound,

or if subscript w is 0, a biologically active compound or derivative thereof is released from the Drug Linker compound or from a Ligand Drug Conjugate compound of a Ligand Drug Conjugate composition prepared from the Drug Linker compound on enzymatic or non-enzymatic cleavage of a bond between $-Y_y$-D of and the remainder of the Drug Linker compound or Ligand Drug Conjugate compound.

[0025f] In another aspect, there is provided a method of preparing a Ligand Drug Conjugate composition comprising the step of contacting a Drug Linker compound disclosed herein with a targeting agent having a reactive thiol functional group under

conditions suitable for effecting Michael addition of the thiol to the indicated maleimide (M^1) moiety of the Drug Linker compound for incorporation of the targeting agent as a Ligand Unit in a Ligand Drug Conjugate compound of the composition.

[0025g] In another aspect, there is provided a compound having the structure of:

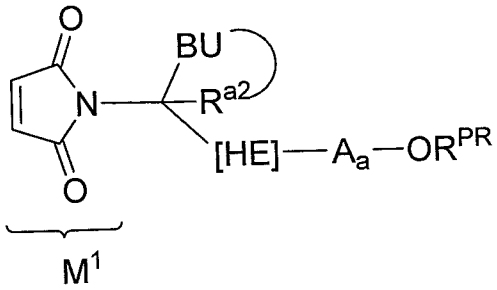

or a salt thereof, wherein

HE is –C(=O)-;

R^{PR} is H or a suitable carboxylic acid protecting group;

BU is a Basic Unit and R^{a2} is an optionally substituted C_1-C_{12} alkyl group that together with the carbon atom to which both are attached, as represented by the curved line, define an optionally substituted C_3-C_{20} heterocyclo having a skeletal secondary or tertiary basic nitrogen atom or a C_3-C_{20} carbocyclo having exocyclic substitution by a basic nitrogen atom of a primary, secondary or tertiary amine functional group or an optionally substituted basic C_1-C_{12} aminoalkyl, wherein the basic nitrogen atom of the amine or aminoalkyl is attributable to BU, and is optionally protonated or protected by a suitable nitrogen-protecting group.

subscript a is 0 or 1;

A is absent when subscript a is 0, or when subscript a is 1 A has the structure of formula (3) or formula (4):

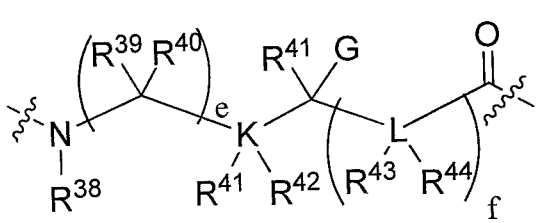

(3)

,

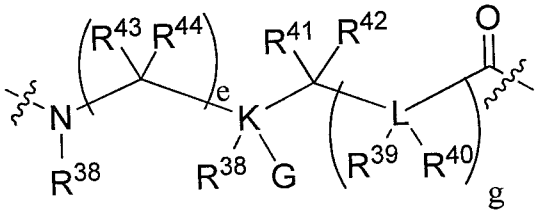

(4)

wherein the wavy lines indicate covalent attachment within the compound structure;

wherein K and L independently are C, N, O or S, provided that when K or L is O or S, R^{41} and R^{42} to K or R^{43} and R^{44} to L are absent, and when K or L are N, one of R^{41}, R^{42} to K or one of R^{42}, R^{43} to L are absent, and provided that no two adjacent L are independently selected as N, O, or S;

wherein subscripts e and f are independently selected integers that range from 0 to 12, and subscript g is an integer ranging from 1 to 12;

wherein G is hydrogen, optionally substituted C_1-C_6 alkyl, -OH, -OR^{PR}, -CO_2H, CO_2R^{PR}, wherein R^{PR} is a suitable protecting, or

G is -$N(R^{PR})(R^{PR})$, wherein R^{PR} are independently a protecting group or R^{PR} together form a suitable protecting group, or

G is -$N(R^{45})(R^{46})$, wherein one of R^{45}, R^{46} is hydrogen or R^{PR}, wherein R^{PR} is a suitable protecting group, and the other is hydrogen or optionally substituted C_1-C_6 alkyl;

wherein R^{38} is hydrogen or optionally substituted C_1-C_6 alkyl;

R^{39}-R^{44} are independently selected from the group consisting of hydrogen, optionally substituted C_1-C_6 alkyl, optionally substituted aryl, and optionally substituted heteroaryl, or

R^{39}, R^{40} together with the carbon atom to which both are attached, or R^{41}, R^{42} together with K to which both are attached when K is a carbon atom define a C_3-C_6 carbocyclo, and R^{41}-R^{44} are as defined herein,

or R^{43}, R^{44} together with L to which both are attached when L is a carbon atom define a C_3-C_6 cycloalkyl, and R^{39}-R^{42} are as defined herein,

or R^{40} and R^{41}, or R^{40} and R^{43}, or R^{41} and R^{43} to together with the carbon atom or heteroatom to which both are attached and the atoms intervening between those carbon atoms and/or heteroatoms define a C_5-C_6 carbocyclo or a C_5-C_6 heterocyclo, and R^{39}, R^{44} and the remainder of remainder of R^{40}-R^{43} are as defined herein,

provided that when K is O or S, R^{41} and R^{42} are absent, and when K is N, one of R^{41}, R^{42} is absent, and when L is O or S, R^{43} and R^{44} are absent, and when L is N, one of R^{43}, R^{44} is absent,

or

A is an alpha-amino, beta-amino or another amine-containing acid residue.

BRIEF DESCRIPTION OF THE DRAWINGS

[0026] Figure 1. Differential *in vitro* kinetics for Auristatin T Drug Unit release from Cysteine Drug Conjugates acting as surrogate Ligand Drug Conjugates of Formula 2, wherein release is initiated by exposure to the protease Cathepsin B, and wherein the Conjugates have a glu-dpr-Peptide Cleavable Unit, which is cleavable by the protease, and self-stabilized Linker Units comprised of an acyclic Basic Unit and succinic acid amide (M^3) moieties, the latter of which result from prior hydrolysis of the succinimide (M^2) moieties of their Formula 1 precursors, wherein the Conjugates differ in the stereochemical configuration of the carbon to which the acyclic Basic Unit is attached.

[0027] Figure 2. *Ex vivo* plasma stability of cAC10 Antibody Drug Conjugates having a MMAE Drug Unit (8-load) linked via protease-cleavable val-cit dipeptide having a self-stabilizing Linker Units comprised of a secondary Basic Unit cyclized as a secondary amine within a 4-membered (Conjugate B) or 6-membered (Conjugate C) heterocyclo in comparison to a cAC10 Antibody Drug Conjugate having the parent, acyclic Basic Unit (Conjugate A) or a related Antibody Drug Conjugate having no self-stabilizing Ligand Unit (Conjugate M).

DETAILED DESCRIPTION OF THE INVENTION

[0028] Definitions

[0029] As used herein and unless otherwise stated or implied by context, terms that are used herein have the meanings defined below. Unless otherwise contraindicated or implied, e.g., by including mutually exclusive elements or options, in these definitions and throughout this specification, the terms "a" and "an" mean one or more and the term "or" means and/or where permitted by context. Thus, as used in the specification and the appended claims, the singular forms "a," "an" and "the" include plural referents unless the context clearly dictates otherwise.

66. Use of a Ligand Drug Conjugate composition of claim 1 in the manufacture of a medicament for treating a hyperproliferative disease or condition in a patient having said disease or condition.

67. The use of claim 66 wherein the hyperproliferative disease or condition is a cancer.

68. The use of claim 67 wherein the cancer is a leukemia or lymphoma.

69. A method of inhibiting the multiplication of a tumor cell or cancer cell, or causing apoptosis in a tumor or cancer cell, by exposing said cell to an effective amount of a Ligand Drug Conjugate composition of claim 1.

70. A Drug Linker compound, wherein the compound has the structure of:

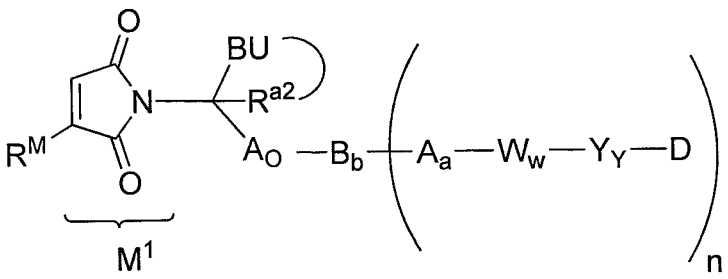

or a salt thereof, wherein

R^M is hydrogen or an optionally substituted C_1-C_6 alkyl, which in Formula 2 is bonded to the saturated carbon adjacent to the carbon substituted by L-S-;

subscript w is 0 or 1;

subscript n is 1, 2, 3 or 4;

subscript a is 0 or 1;

subscript b is 0 or 1,

provided that subscript b is 1 when subscript n is 2, 3 or 4 and subscript b is 0 when subscript n is 1;

A is a first optional Stretcher Unit;

A_O is a second optional Stretcher Unit;

B is an optional Branching Unit; and

wherein each of A, A_O and B is an independently selected single unit or is optionally comprised or consists of two, three or four independently selected subunits;

136. Use of a Ligand Drug Conjugate composition of claim 1 in the manufacture of a medicament for inhibiting the multiplication of a tumor cell or cancer cell, or causing apoptosis in a tumor or cancer cell.