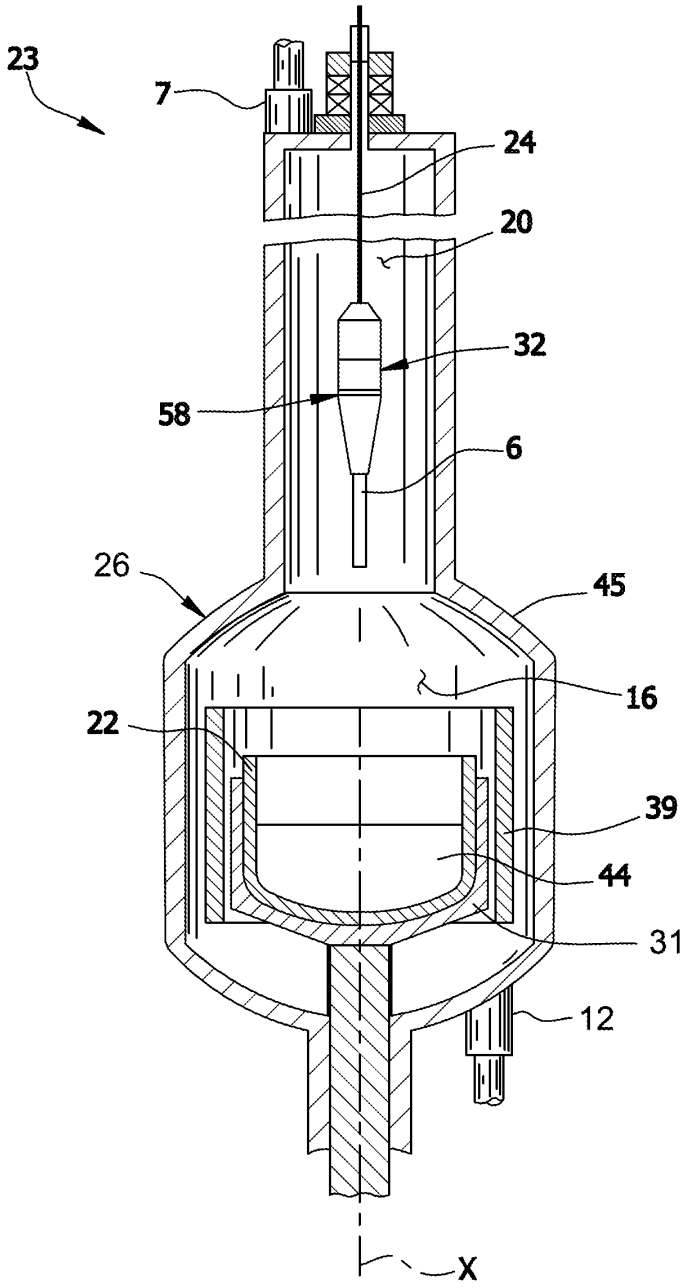

FIG. 1

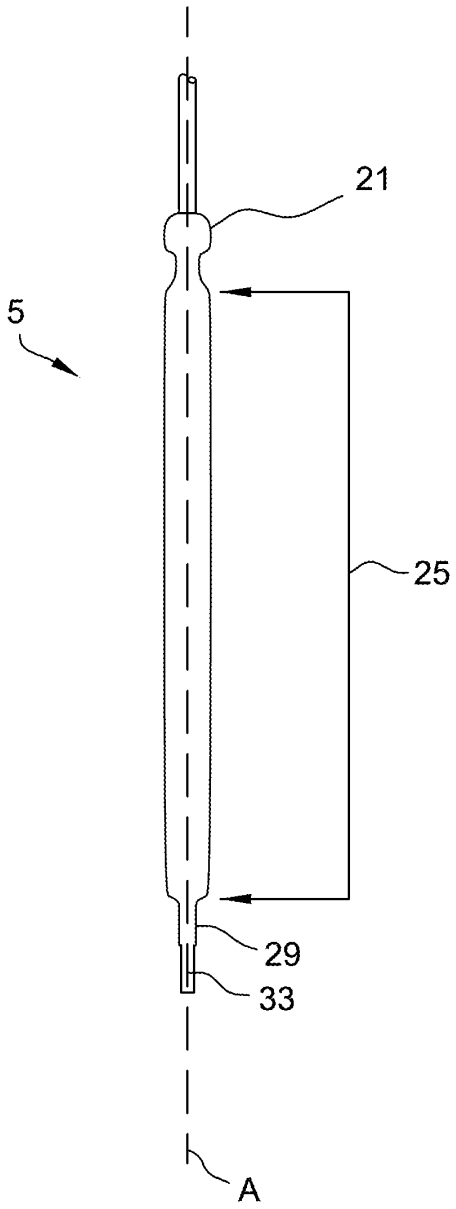

FIG. 2

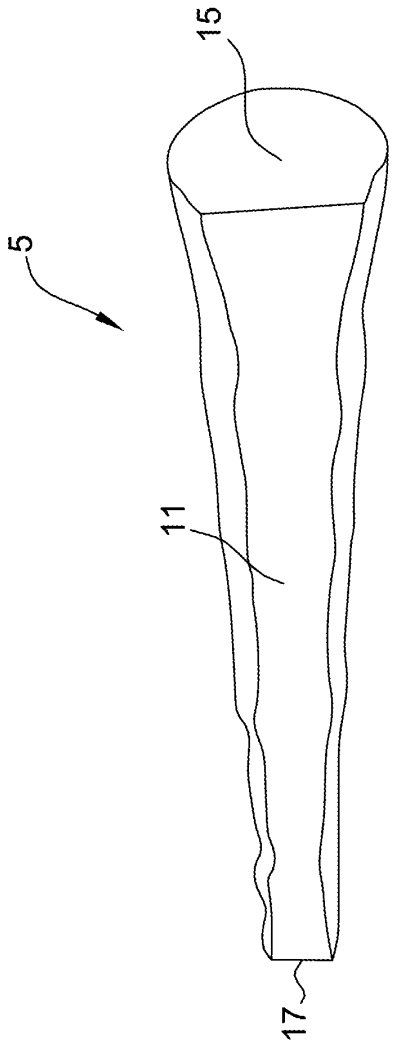

FIG. 3

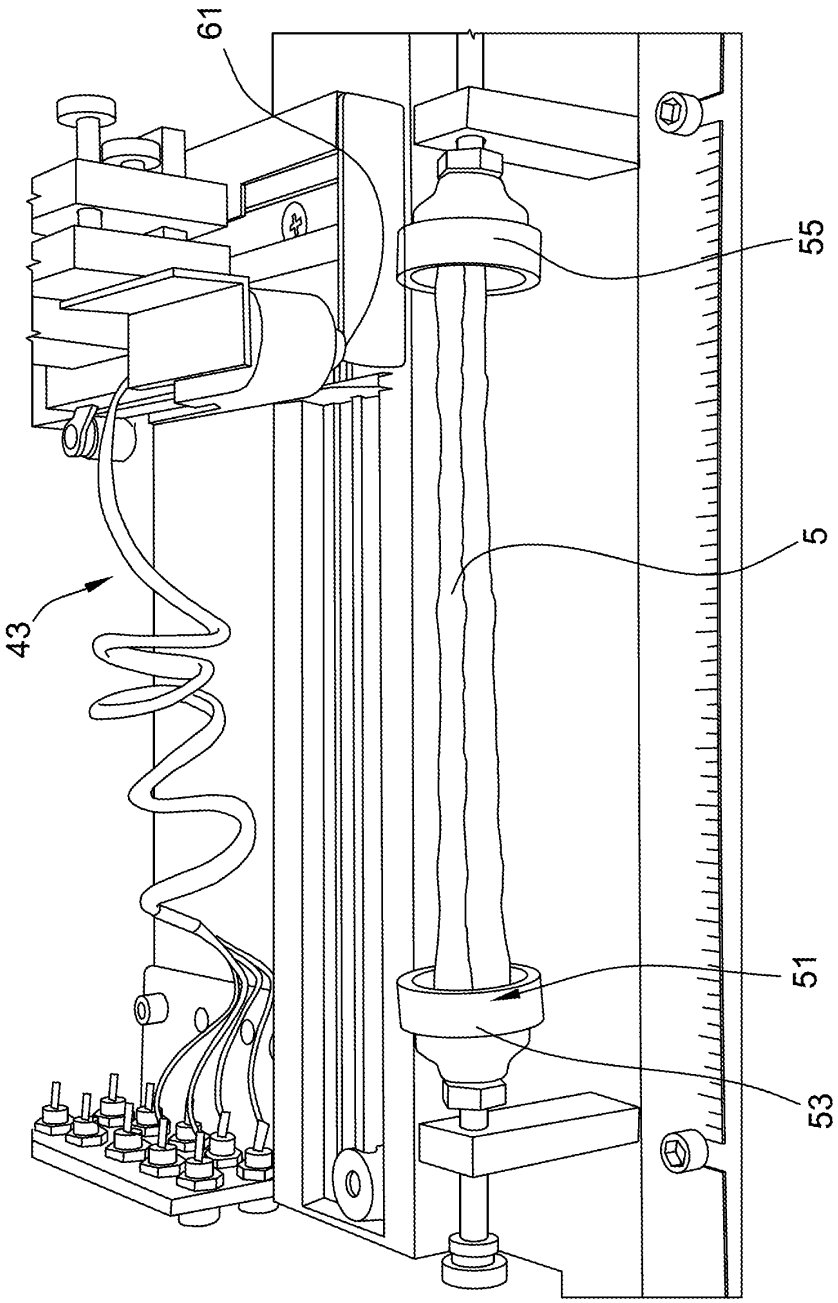

FIG. 4

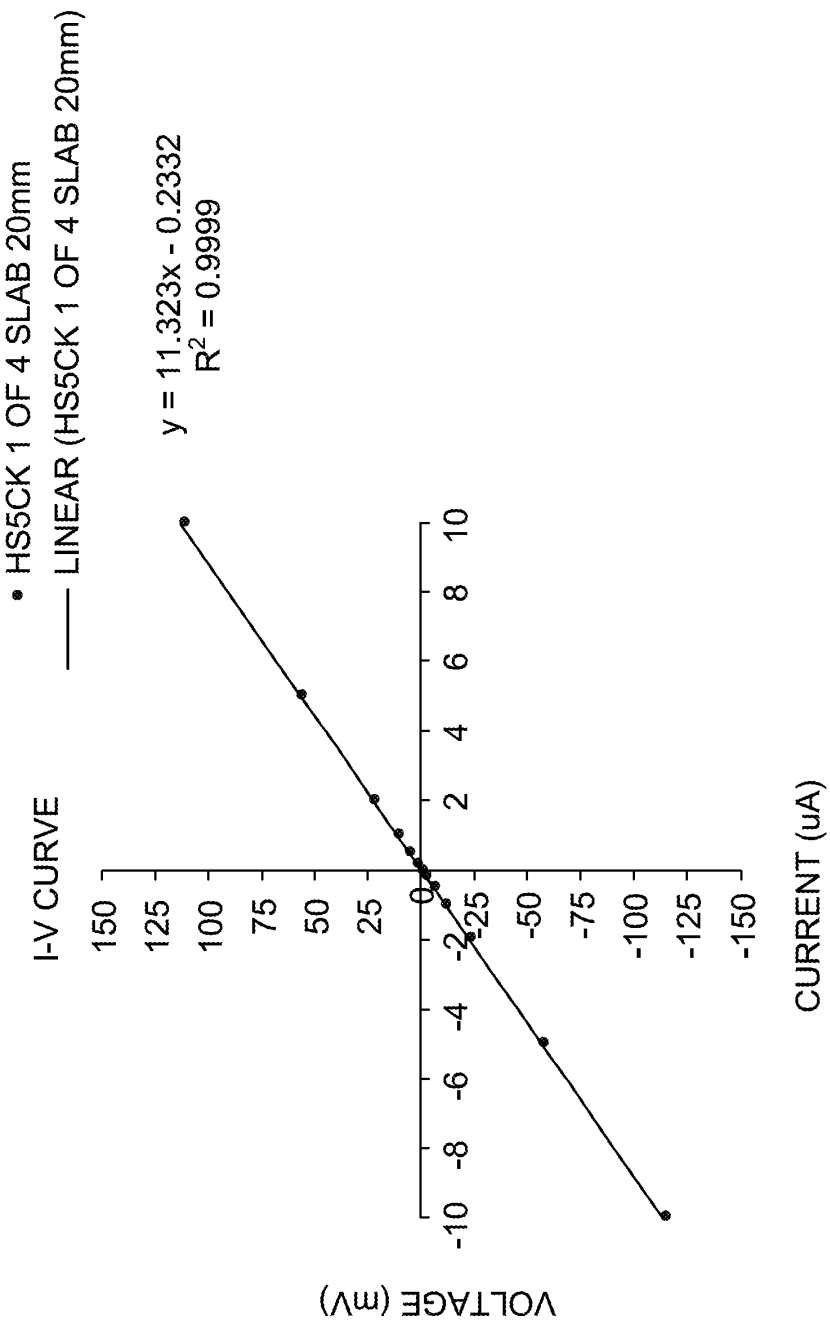
I-V CURVE
HS5CK 1 OF 4 SLAB 20mm
LINEAR (HS5CK 1 OF 4 SLAB 20mm)
y = 11.323x - 0.2332
R2 = 0.9999
VOLTAGE (mV)
CURRENT (uA)
150
125
100
75
50
25
0
-25
-50
-75
-100
-125
-150
-10
-8
-6
-4
-2
2
4
6
8
10

FIG. 5

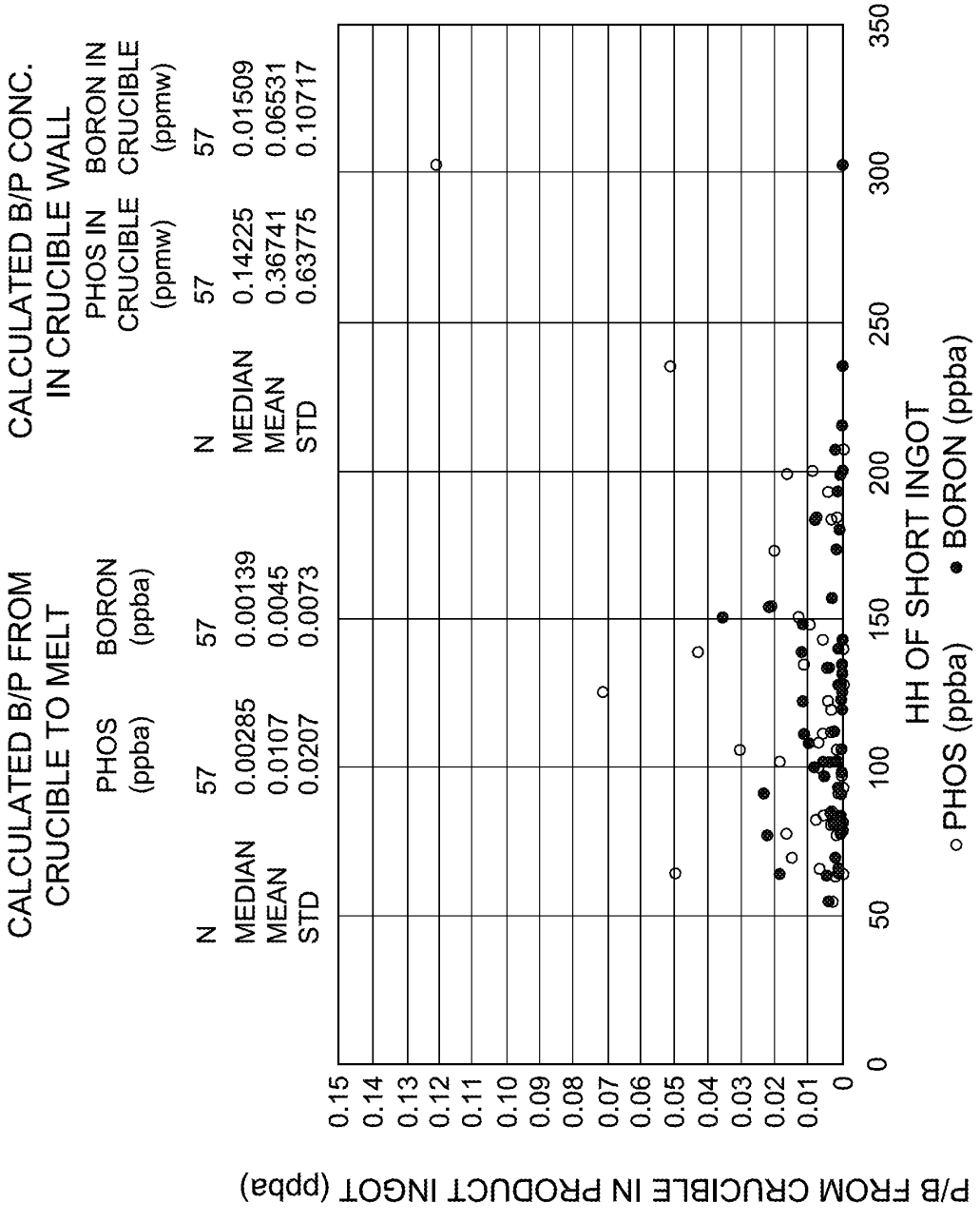
CALCULATED B/P FROM CRUCIBLE TO MELT
PHOS (ppba) BORON (ppba)
N 57 57
MEDIAN 0.00285 0.00139
MEAN 0.0107 0.0045
STD 0.0207 0.0073
CALCULATED B/P CONC. IN CRUCIBLE WALL
PHOS IN CRUCIBLE (ppmw) BORON IN CRUCIBLE (ppmw)
N 57 57
MEDIAN 0.14225 0.01509
MEAN 0.36741 0.06531
STD 0.63775 0.10717
P/B FROM CRUCIBLE IN PRODUCT INGOT (ppba)
0.15
0.14
0.13
0.12
0.11
0.10
0.09
0.08
0.07
0.06
0.05
0.04
0.03
0.02
0.01
0
0 50 100 150 200 250 300 350
HH OF SHORT INGOT
○ PHOS (ppba) ● BORON (ppba)

FIG. 6

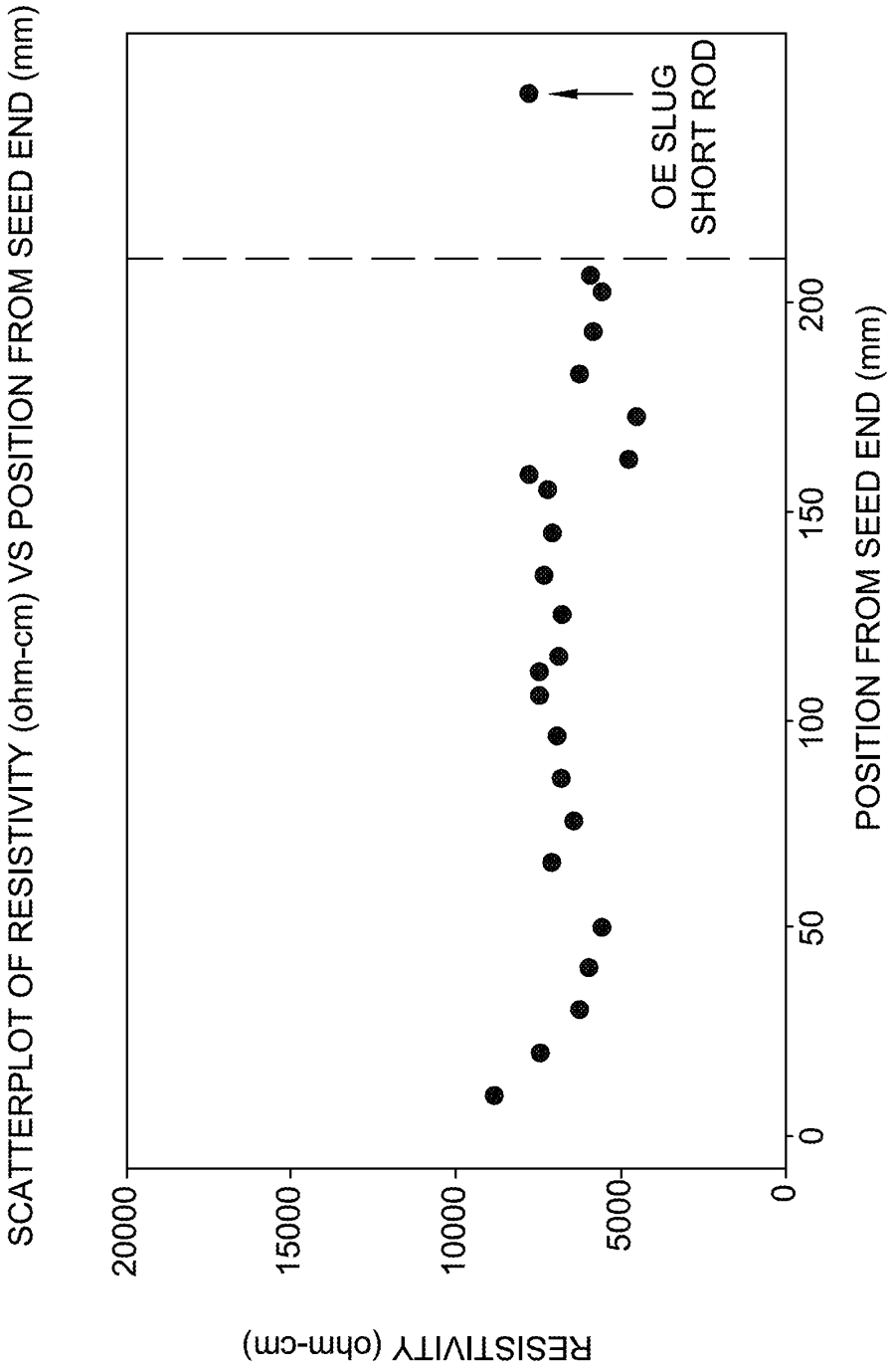
SCATTERPLOT OF RESISTIVITY (ohm-cm) VS POSITION FROM SEED END (mm)
RESISTIVITY (ohm-cm)
20000
15000
10000
5000
0
0
50
100
150
200
POSITION FROM SEED END (mm)
OE SLUG
SHORT ROD

FIG. 7

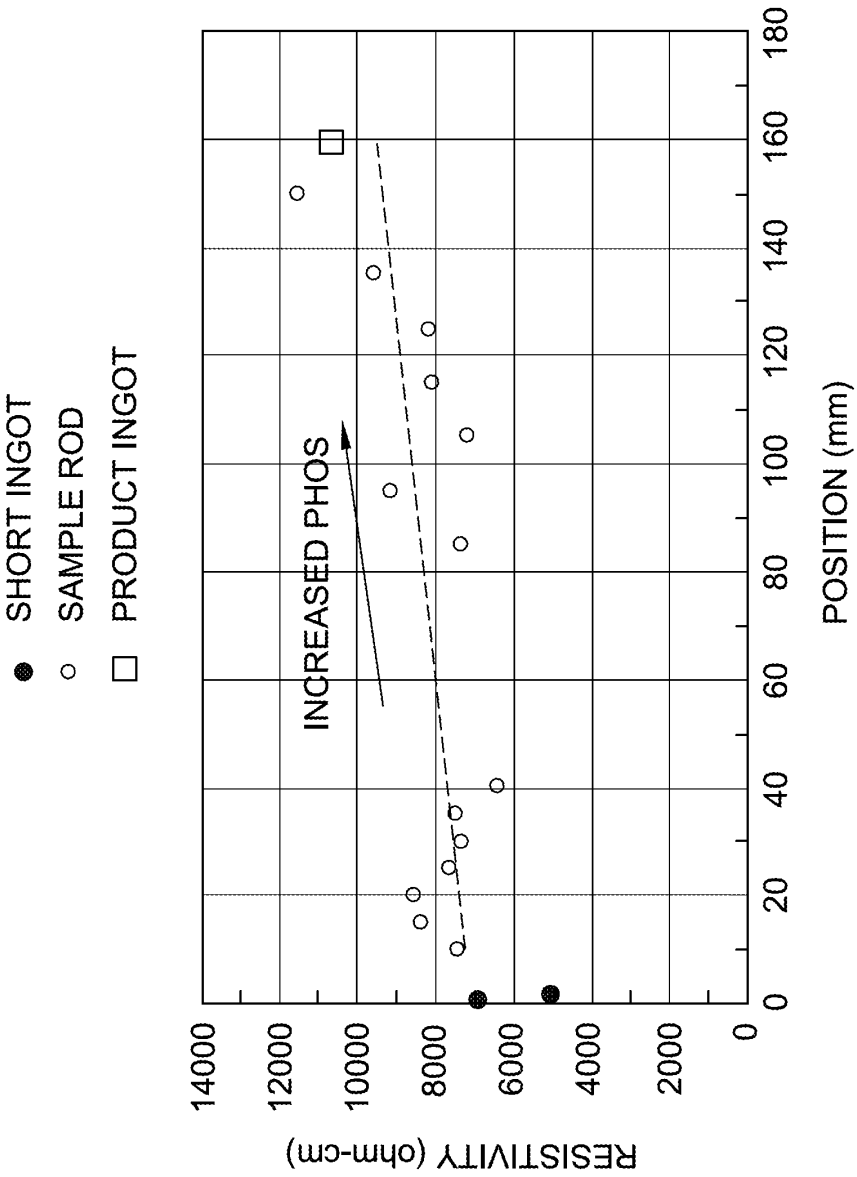
SHORT INGOT
SAMPLE ROD
PRODUCT INGOT
INCREASED PHOS
RESISTIVITY (ohm-cm)
POSITION (mm)
0
2000
4000
6000
8000
10000
12000
14000
0
20
40
60
80
100
120
140
160
180

FIG. 8

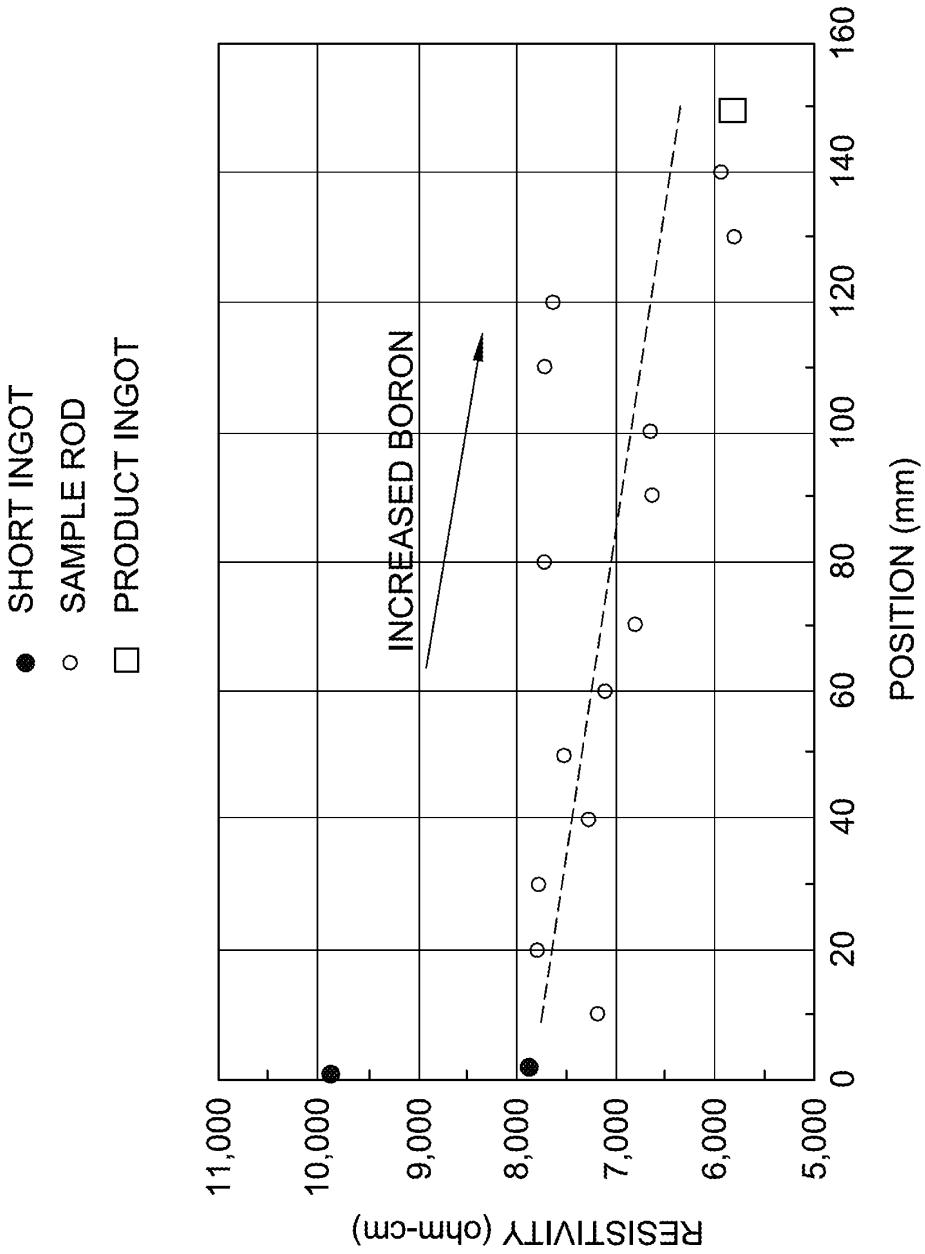
SHORT INGOT
SAMPLE ROD
PRODUCT INGOT
INCREASED BORON
RESISTIVITY (ohm-cm)
11,000
10,000
9,000
8,000
7,000
6,000
5,000
0
20
40
60
80
100
120
140
160
POSITION (mm)

FIG. 9

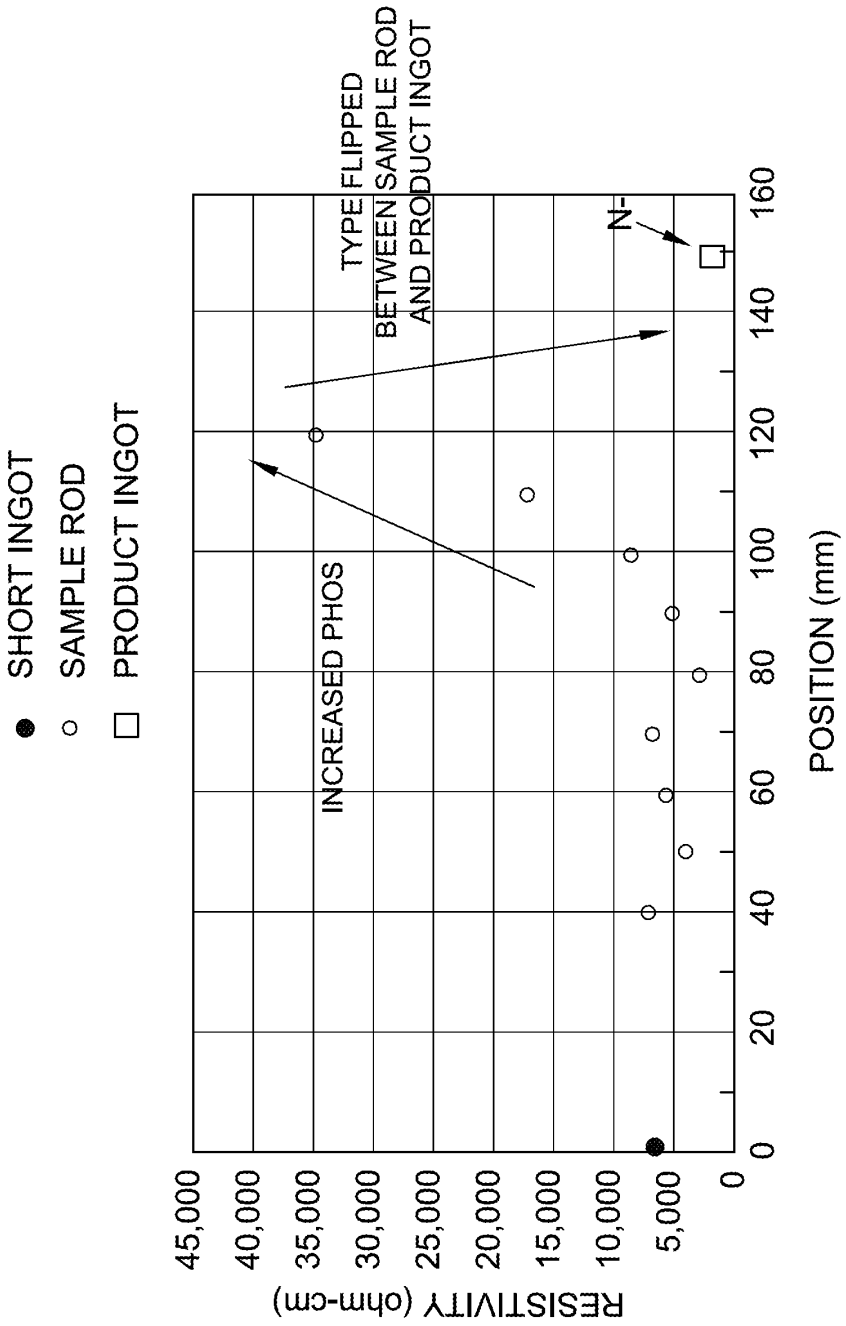
SHORT INGOT
SAMPLE ROD
PRODUCT INGOT
INCREASED PHOS
TYPE FLIPPED BETWEEN SAMPLE ROD AND PRODUCT INGOT
N-
RESISTIVITY (ohm-cm)
45,000
40,000
35,000
30,000
25,000
20,000
15,000
10,000
5,000
0
0
20
40
60
80
100
120
140
160
POSITION (mm)

FIG. 10

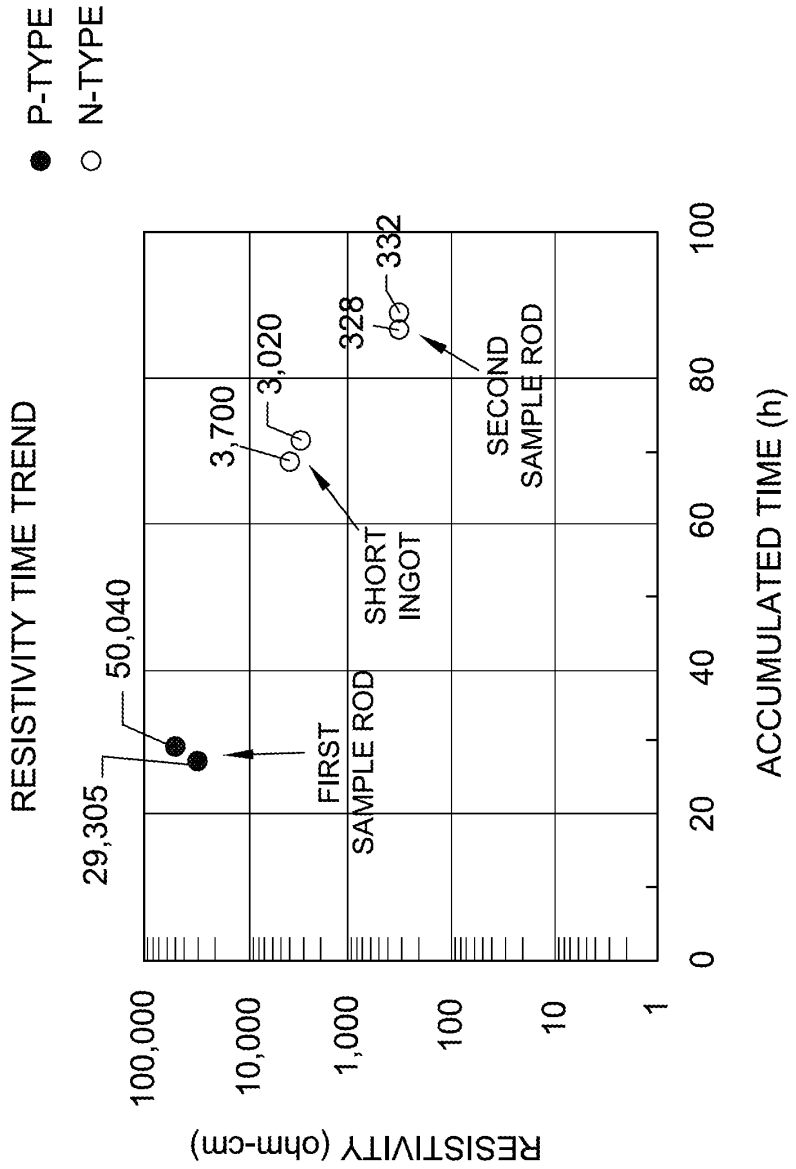
RESISTIVITY TIME TREND
P-TYPE
N-TYPE
RESISTIVITY (ohm-cm)
100,000
10,000
1,000
100
10
1
ACCUMULATED TIME (h)
0
20
40
60
80
100
29,305
50,040
3,700
3,020
328
332
FIRST SAMPLE ROD
SHORT INGOT
SECOND SAMPLE ROD

FIG. 11

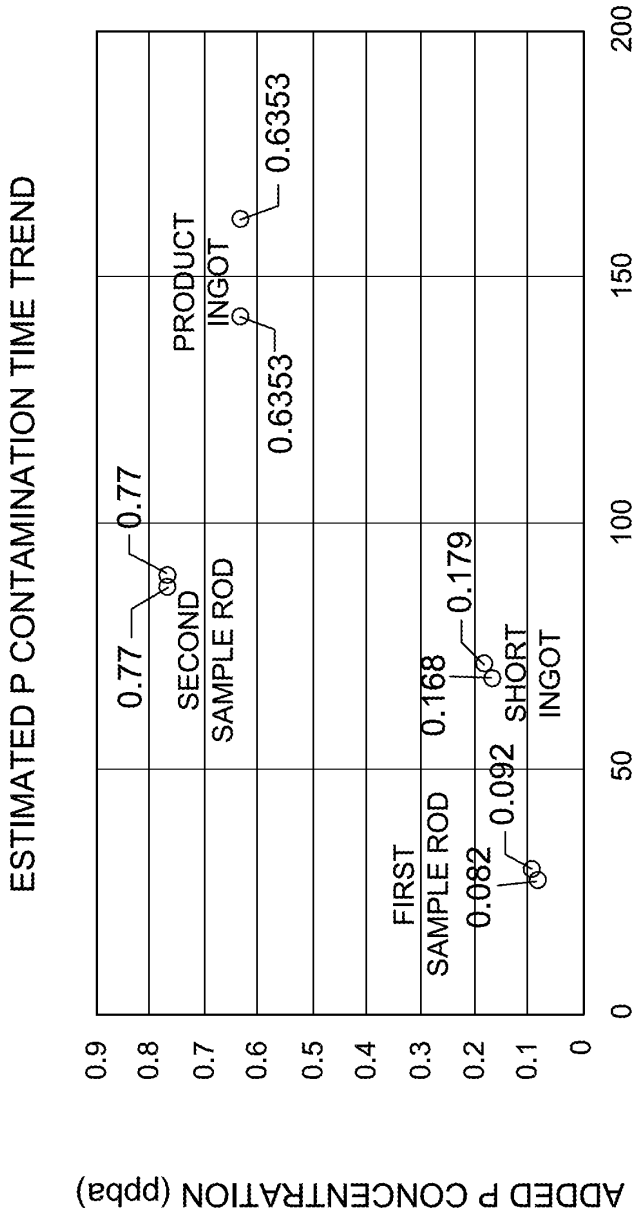
ESTIMATED P CONTAMINATION TIME TREND
ADDED P CONCENTRATION (ppba)
ACCUMULATED TIME (h)
0
0.1
0.2
0.3
0.4
0.5
0.6
0.7
0.8
0.9
0
50
100
150
200
FIRST SAMPLE ROD
SECOND SAMPLE ROD
PRODUCT INGOT
SHORT INGOT
0.082
0.092
0.168
0.179
0.77
0.77
0.6353
0.6353

FIG. 12