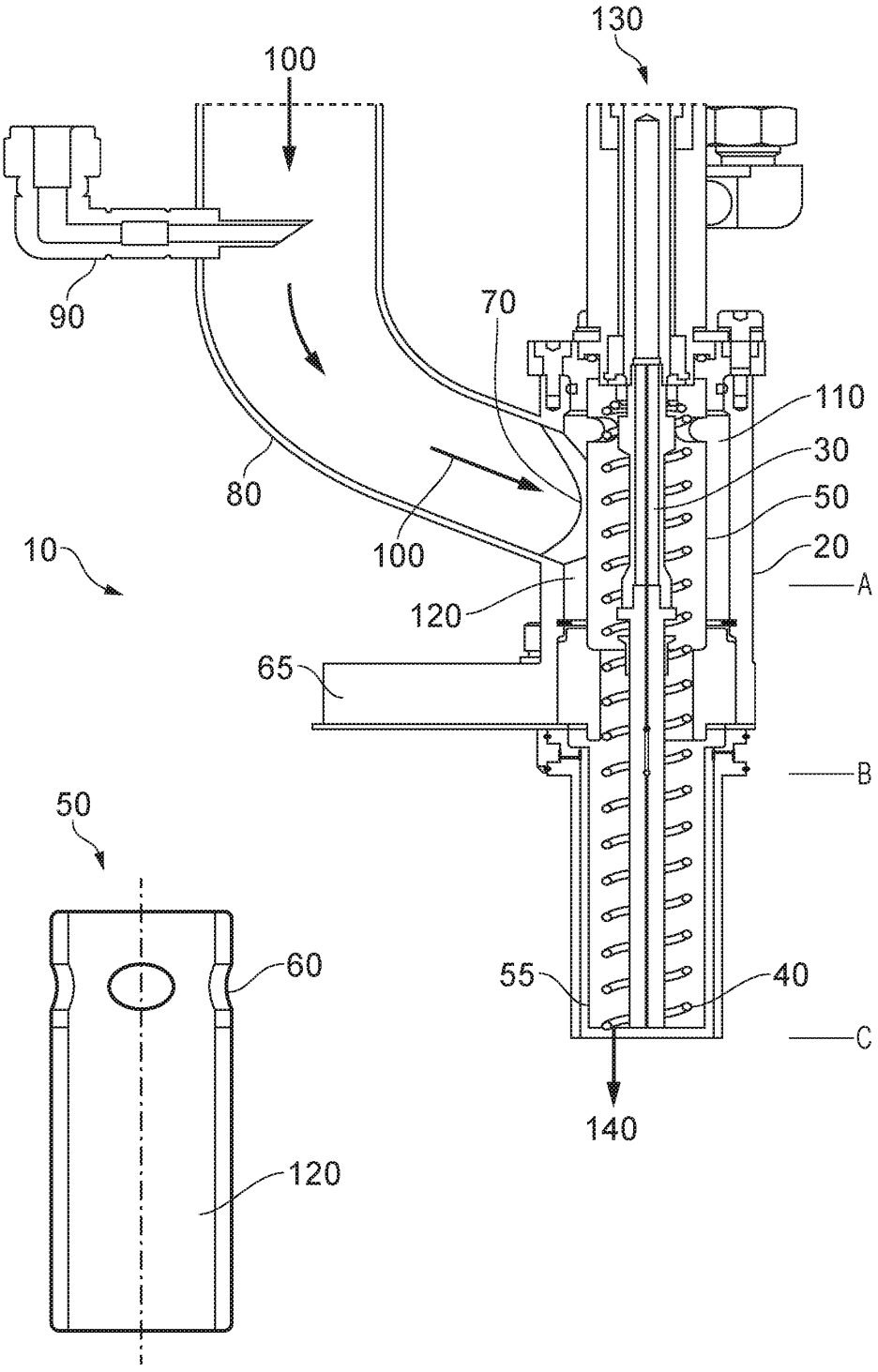

FIG. 1

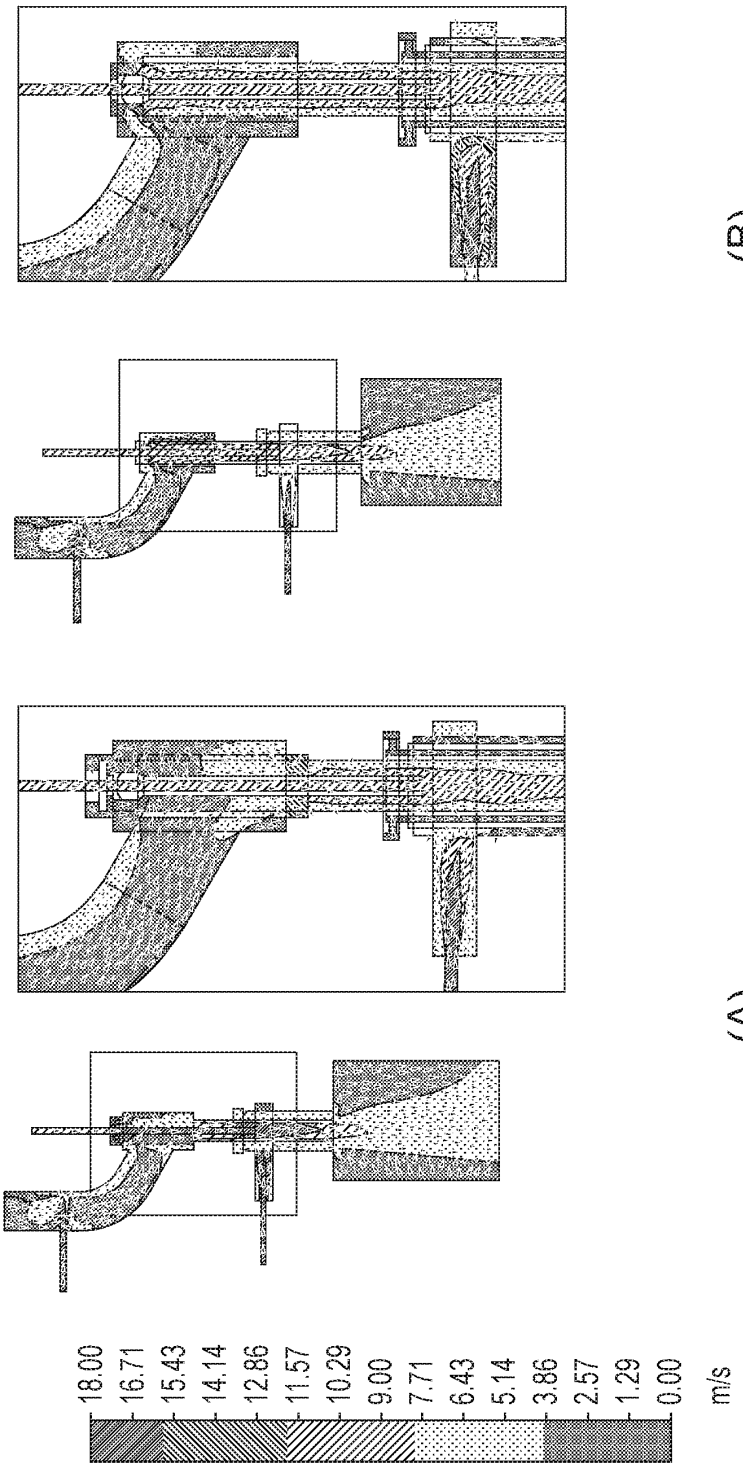
(B)
(A)
18.00
16.71
15.43
14.14
12.86
11.57
10.29
9.00
7.71
6.43
5.14
3.86
2.57
1.29
0.00
m/s

FIG. 2

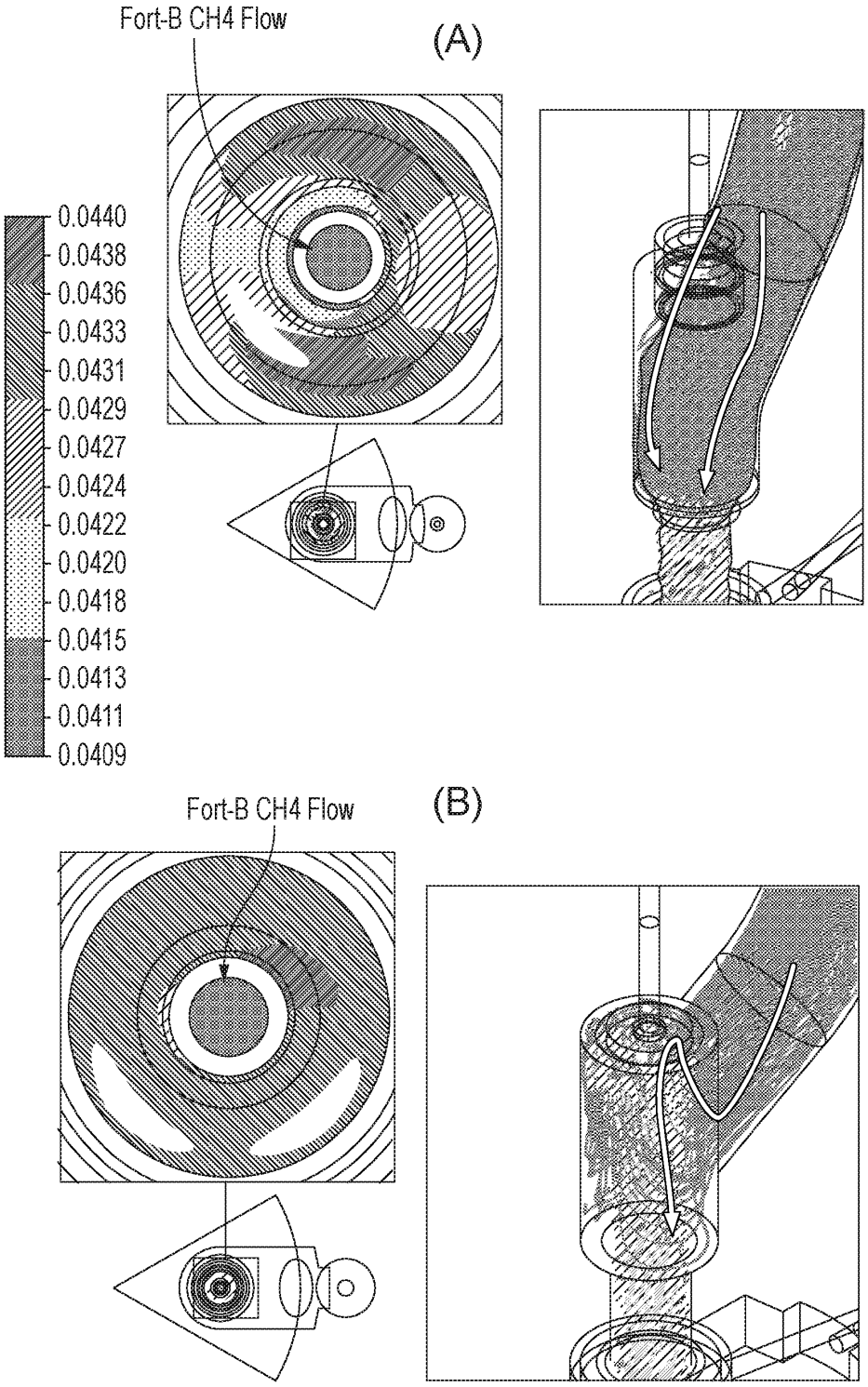
Fort-B CH4 Flow
(A)
0.0440
0.0438
0.0436
0.0433
0.0431
0.0429
0.0427
0.0424
0.0422
0.0420
0.0418
0.0415
0.0413
0.0411
0.0409
Fort-B CH4 Flow
(B)

FIG. 3

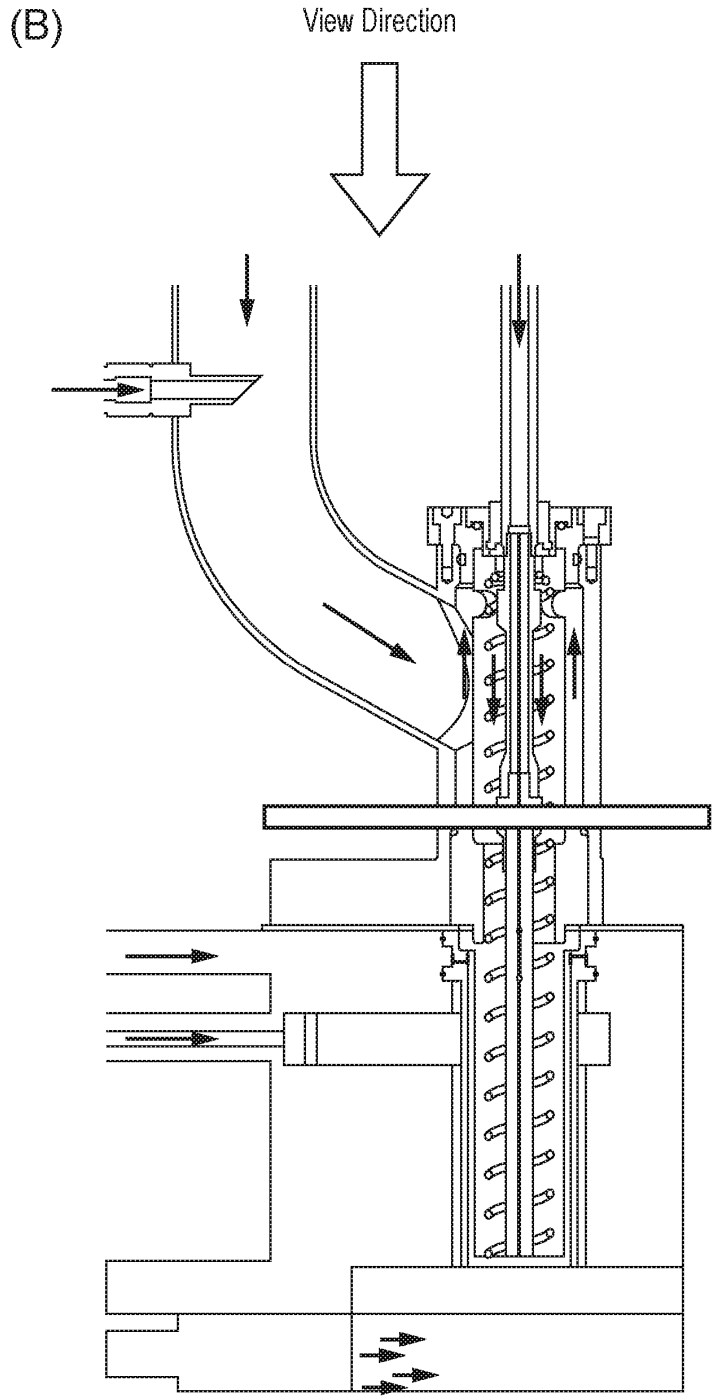

FIG. 3 (Continued)

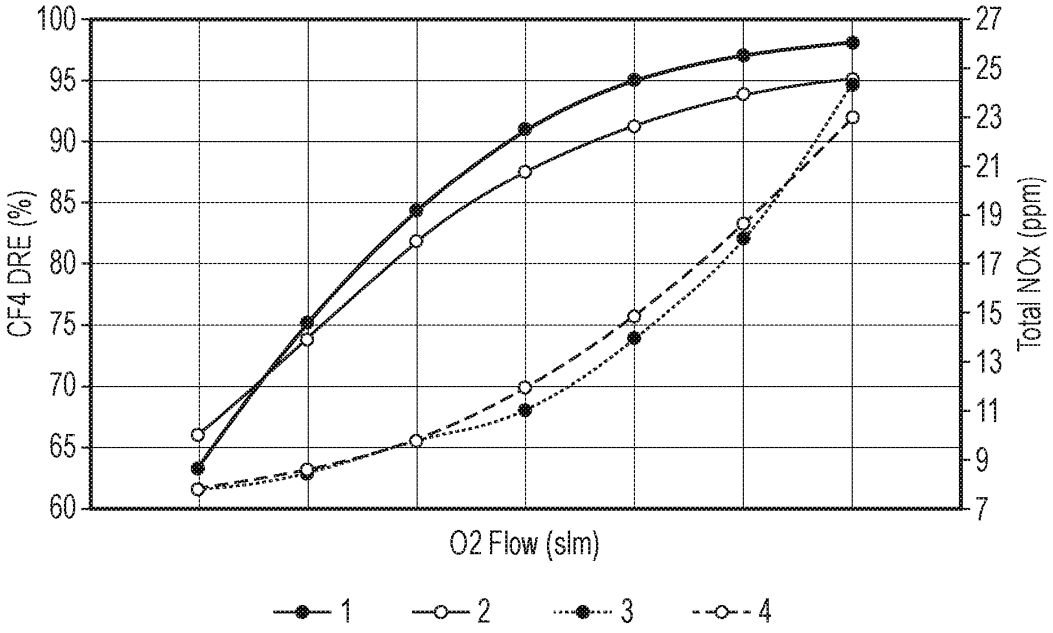
100
95
90
85
80
75
70
65
60
CF4 DRE (%)
27
25
23
21
19
17
15
13
11
9
7
Total NOx (ppm)
O2 Flow (slm)
1
2
3
4

FIG. 4

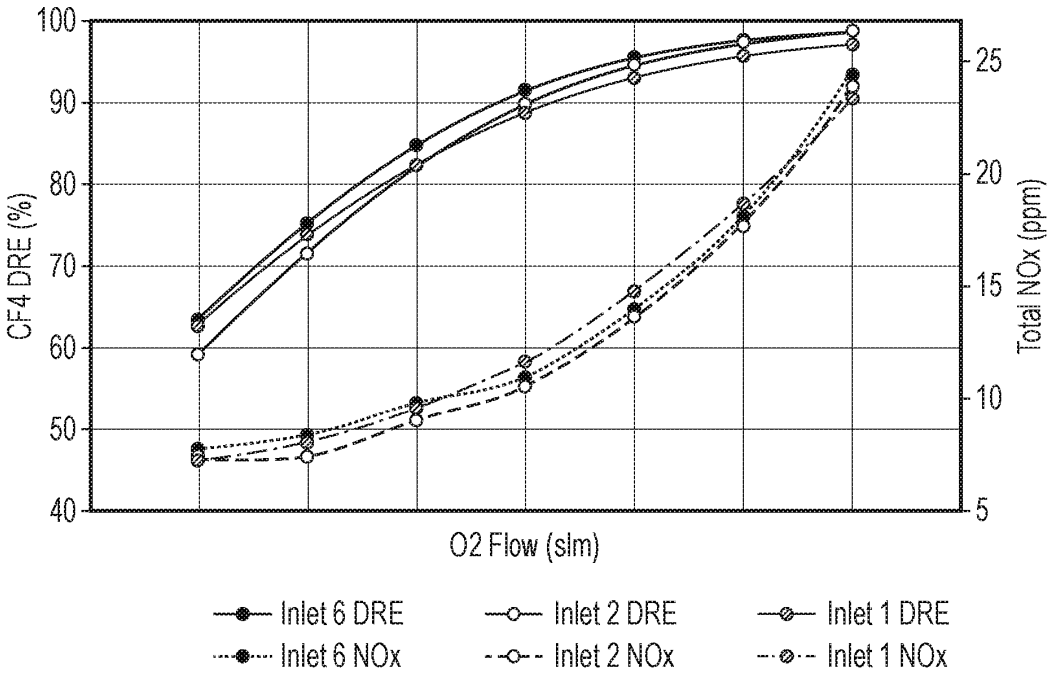
100
90
80
70
60
50
40
CF4 DRE (%)
25
20
15
10
5
Total NOx (ppm)
O2 Flow (slm)
Inlet 6 DRE
Inlet 2 DRE
Inlet 1 DRE
Inlet 6 NOx
Inlet 2 NOx
Inlet 1 NOx

FIG. 5

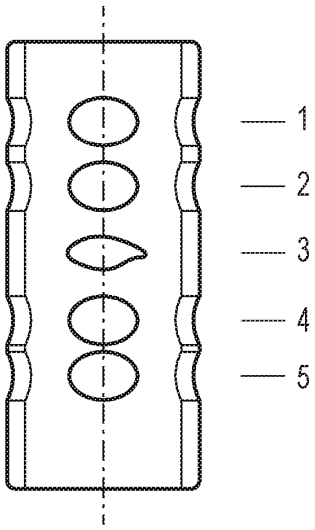
1
2
3
4
5

FIG. 6

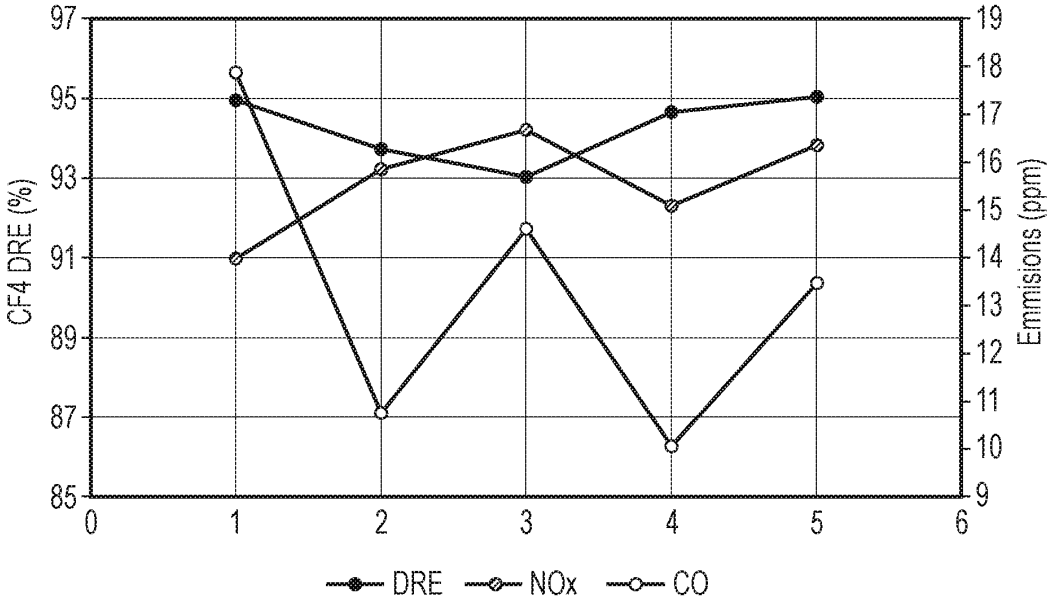
CF4 DRE (%)
Emmisions (ppm)
97
95
93
91
89
87
85
19
18
17
16
15
14
13
12
11
10
9
0
1
2
3
4
5
6
DRE
NOx
CO

FIG. 7

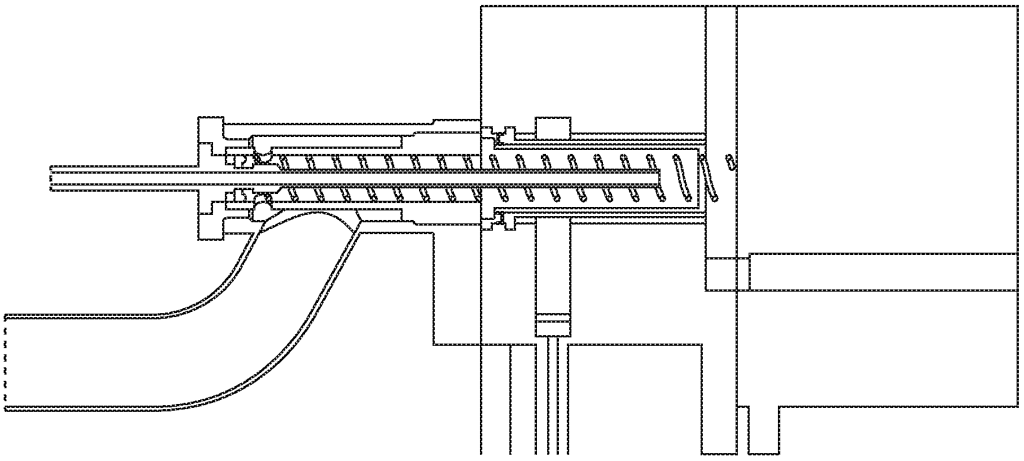

FIG. 8B

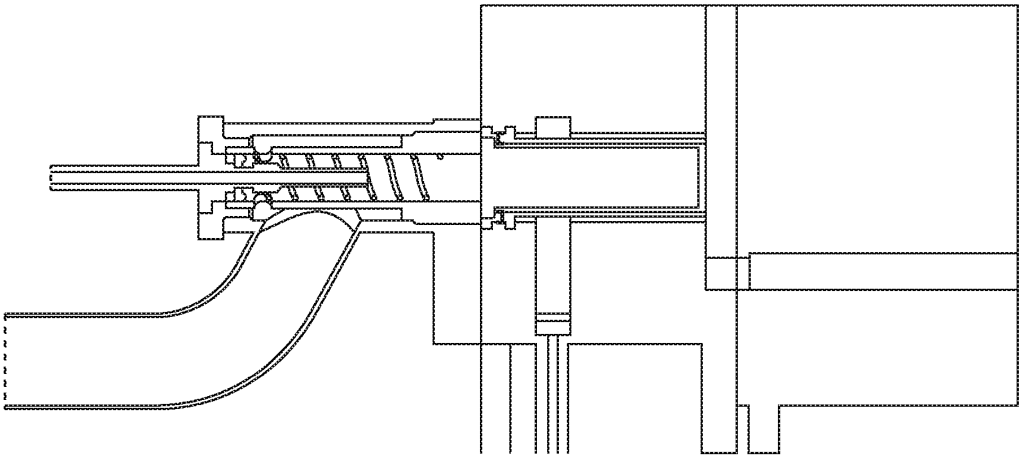

FIG. 8A

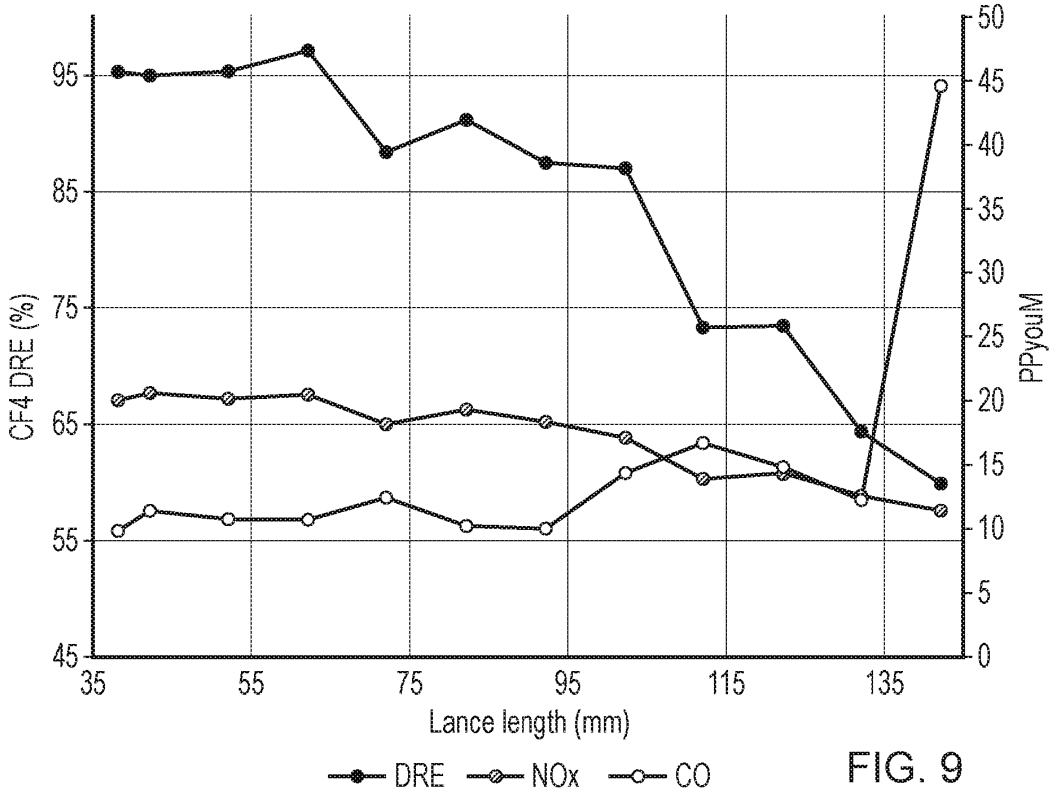
CF4 DRE (%)
PPyouM
Lance length (mm)
DRE
NOx
CO

FIG. 9

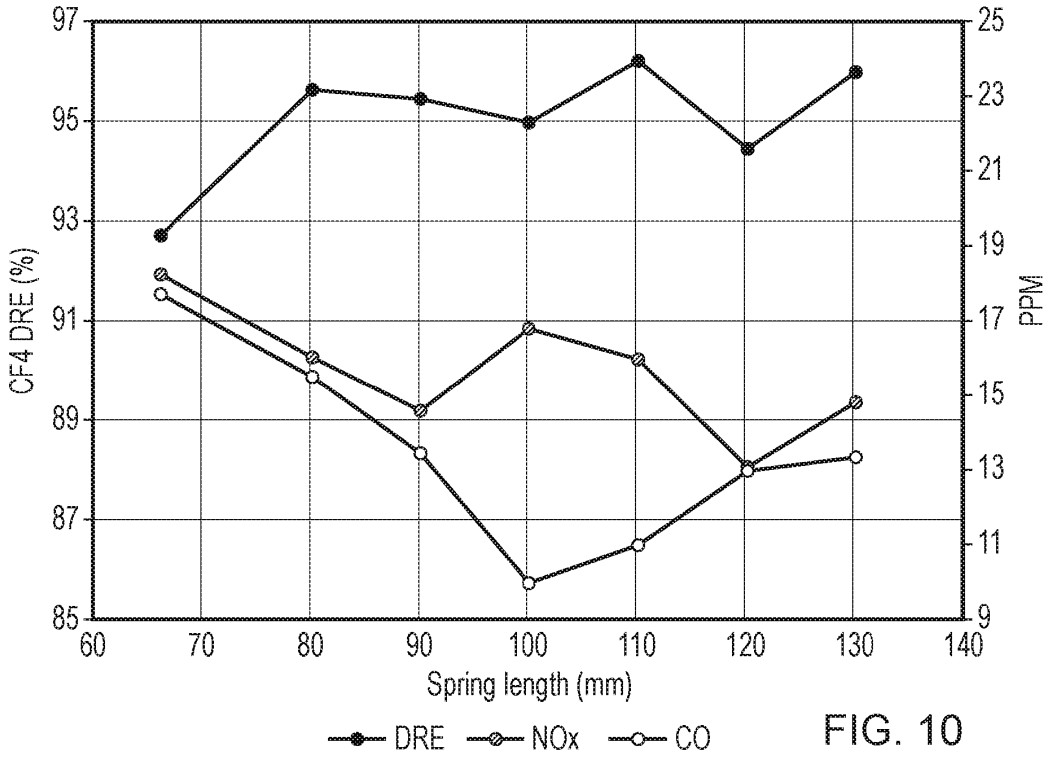
CF4 DRE (%)
PPM
Spring length (mm)
DRE
NOx
CO

FIG. 10

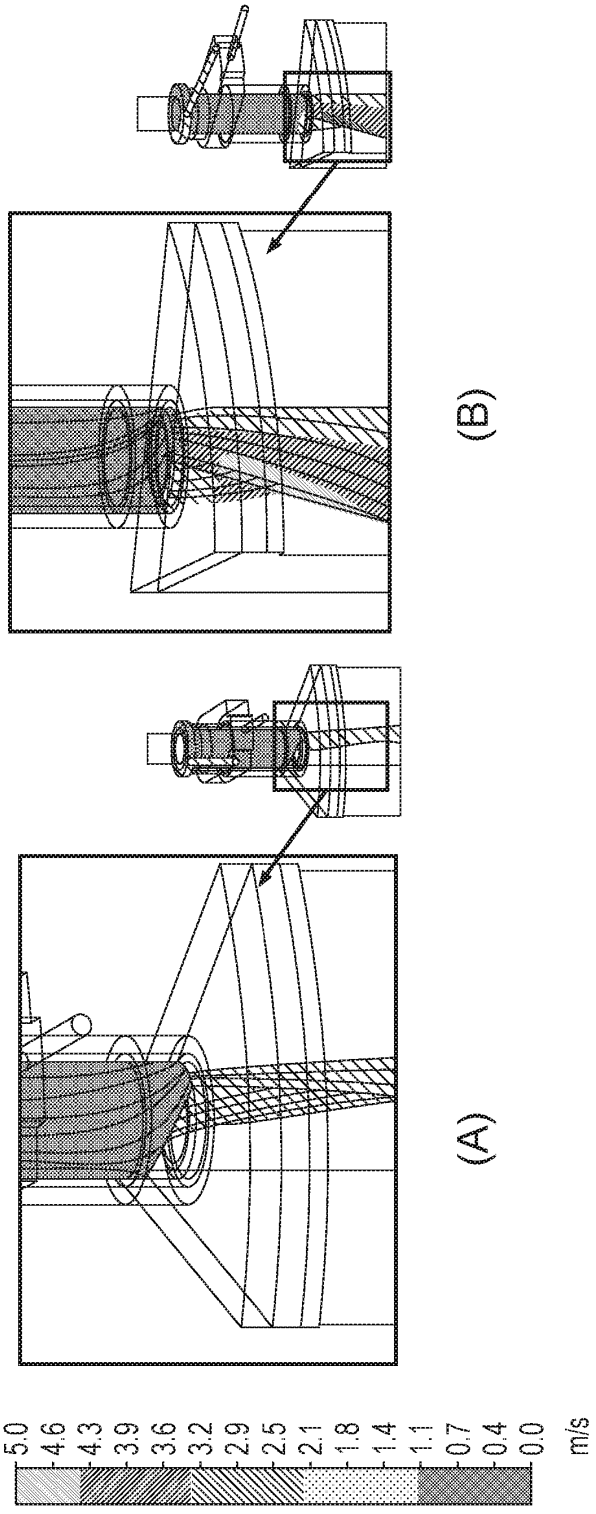

FIG. 11

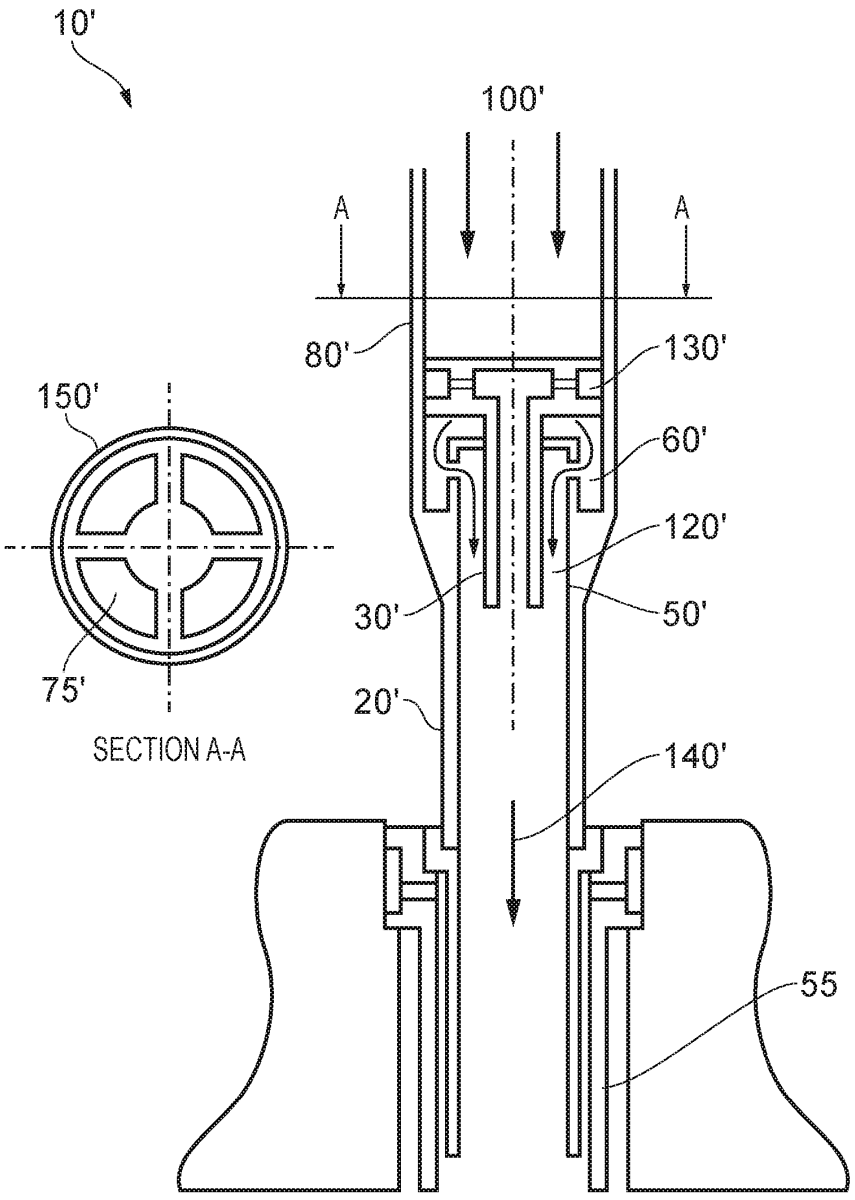

FIG. 12