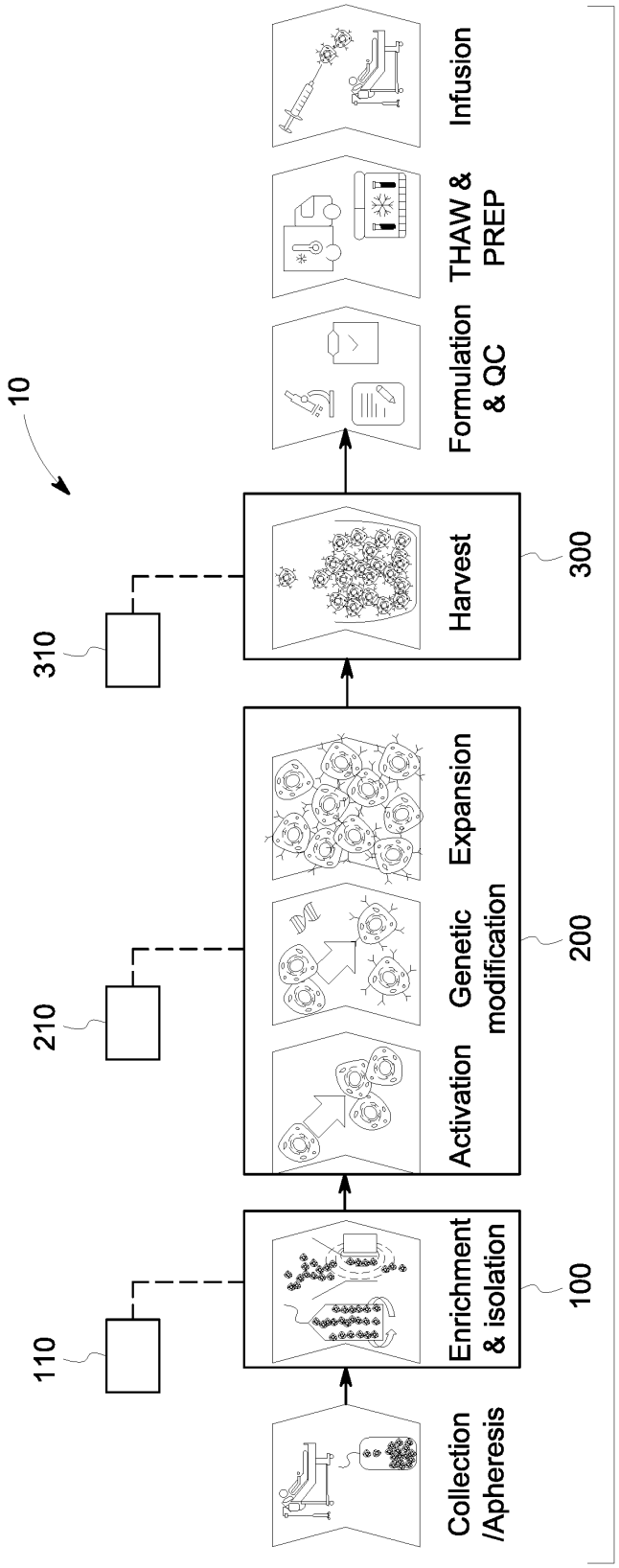
10
110
Collection /Apheresis
Enrichment & isolation
100
210
Activation
Genetic modification
Expansion
200
310
Harvest
300
Formulation & QC
THAW & PREP
Infusion

FIG. 1

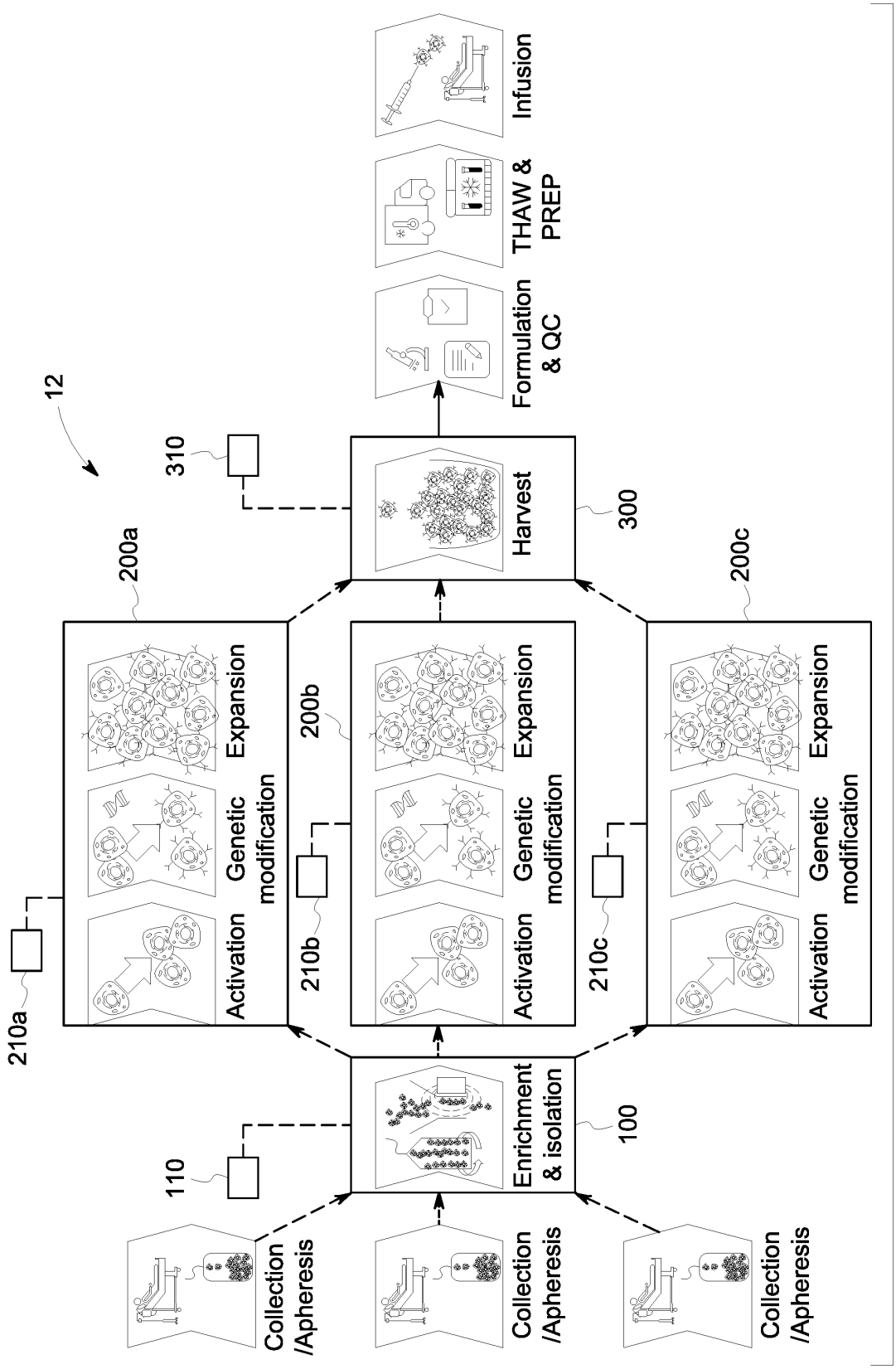
12
Collection /Apheresis
Collection /Apheresis
Collection /Apheresis
110
Enrichment & isolation
100
210a
210b
210c
200a
200b
200c
Activation
Genetic modification
Expansion
Activation
Genetic modification
Expansion
Activation
Genetic modification
Expansion
310
Harvest
300
Formulation & QC
THAW & PREP
Infusion

FIG. 2

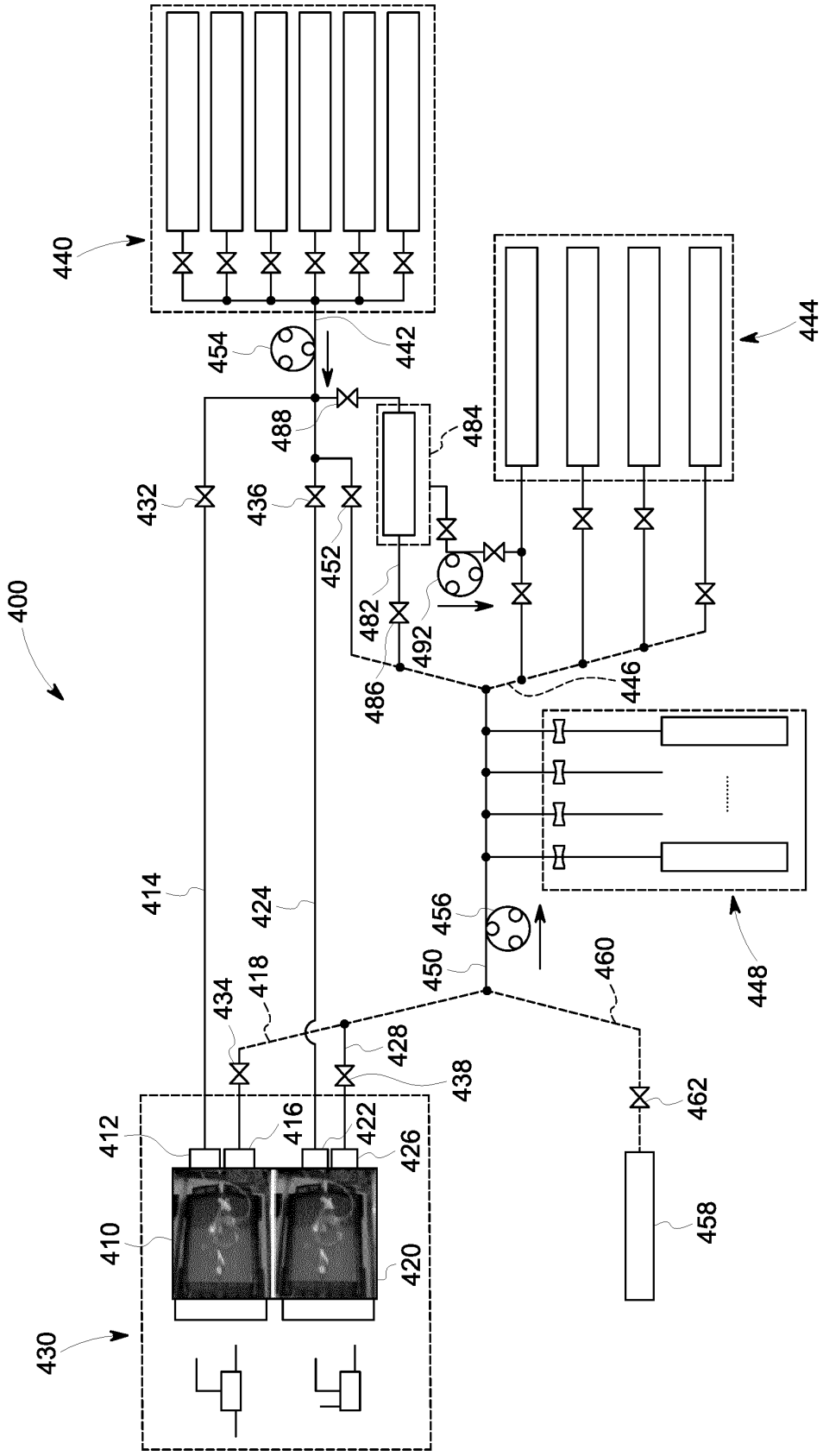
400
410
412
414
416
418
420
422
424
426
428
430
432
434
436
438
440
442
444
446
448
450
452
454
456
458
460
462
482
484
486
488
492

FIG. 3

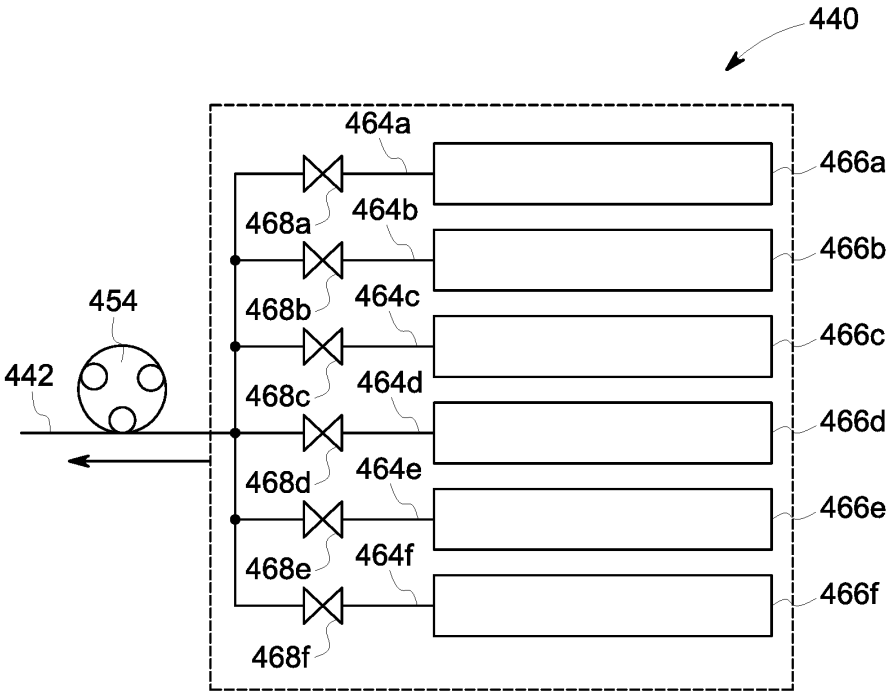
440
464a
466a
468a
464b
466b
454
468b
464c
466c
442
468c
464d
466d
468d
464e
466e
468e
464f
466f
468f

FIG. 4

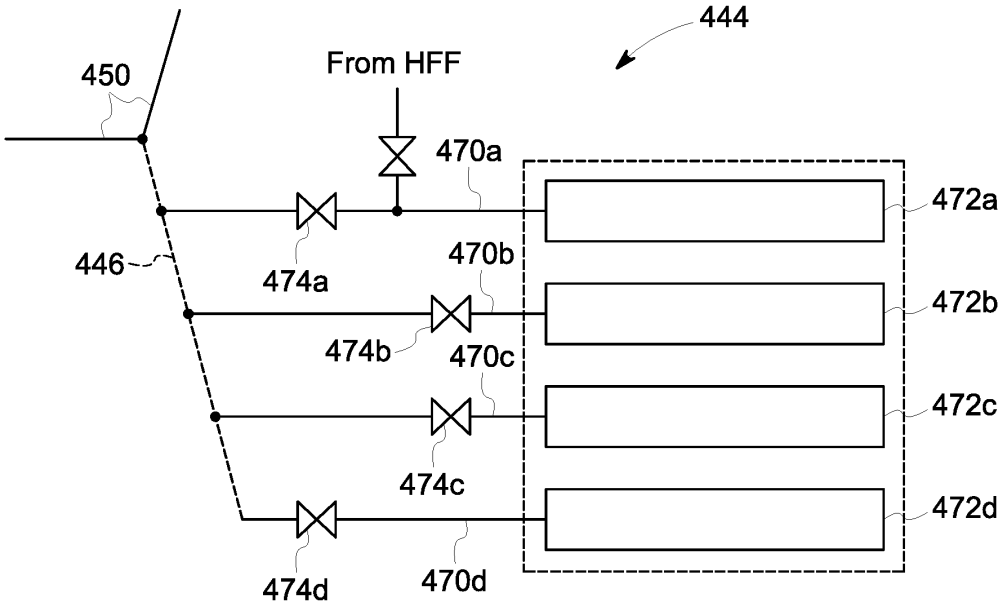
444
450
From HFF
470a
472a
446
474a
470b
472b
474b
470c
472c
474c
472d
474d
470d

FIG. 5

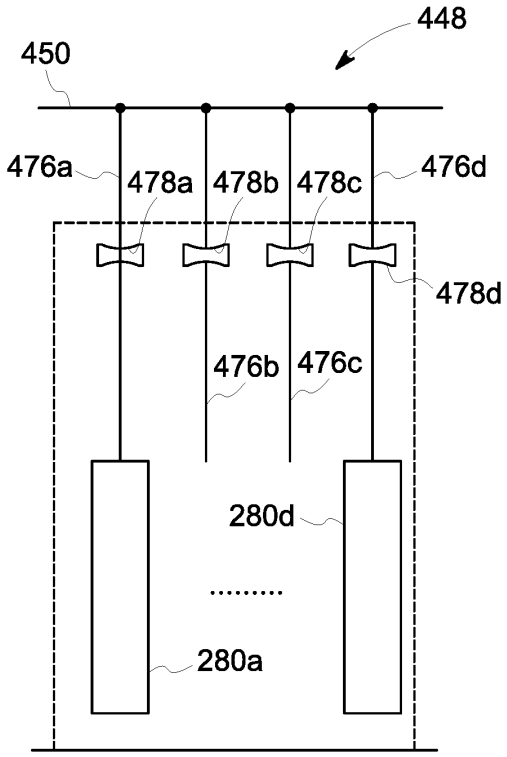
448
450
476a
478a
478b
478c
476d
478d
476b
476c
280d
.....
280a

FIG. 6

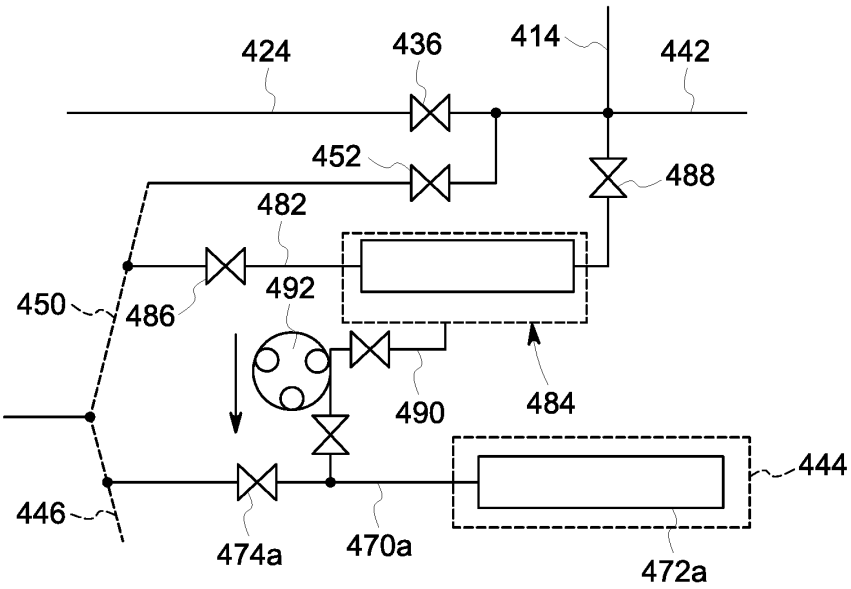
424
436
414
442
452
488
482
450
486
492
490
484
444
446
474a
470a
472a

FIG. 7

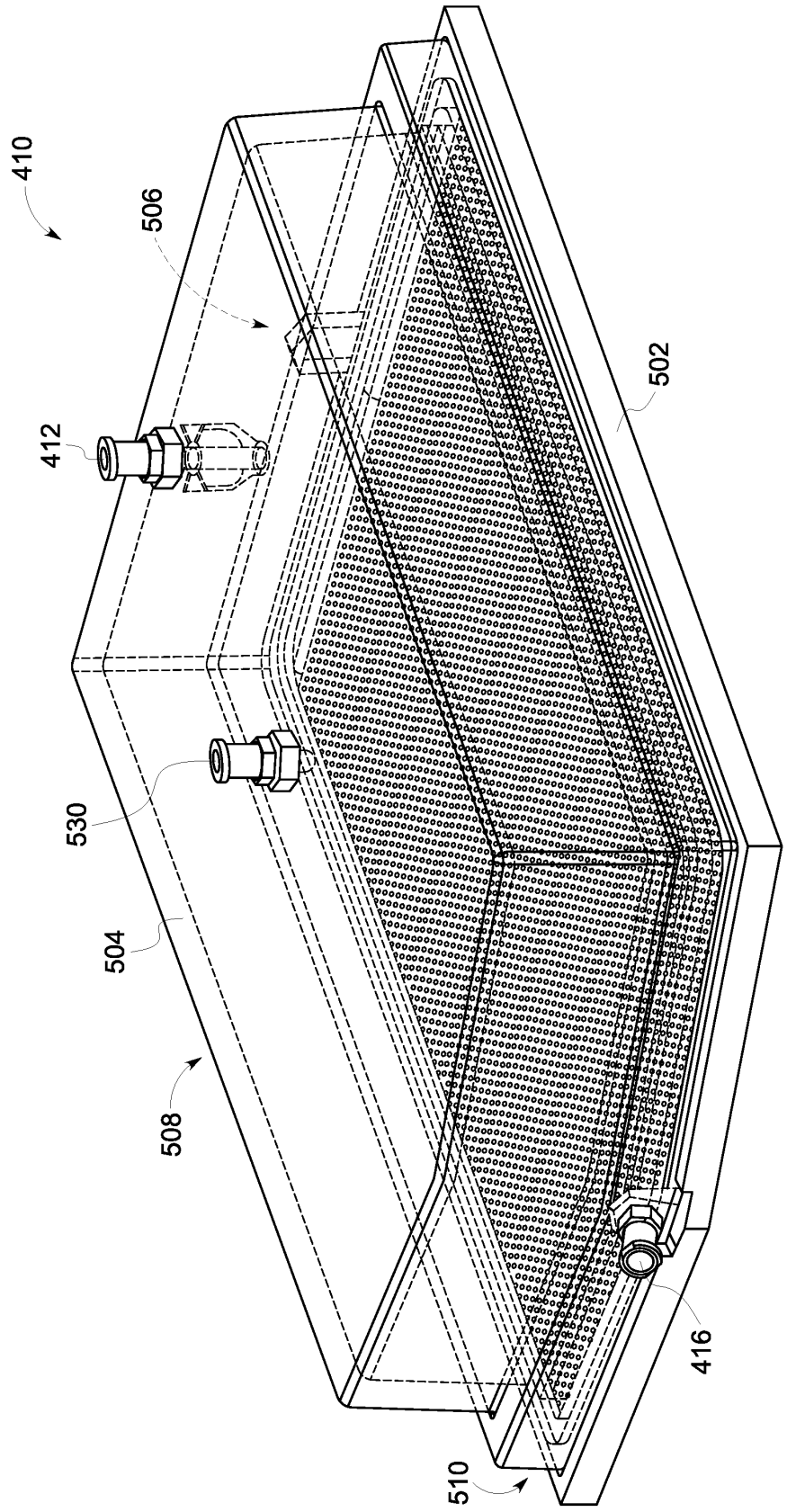

FIG. 8

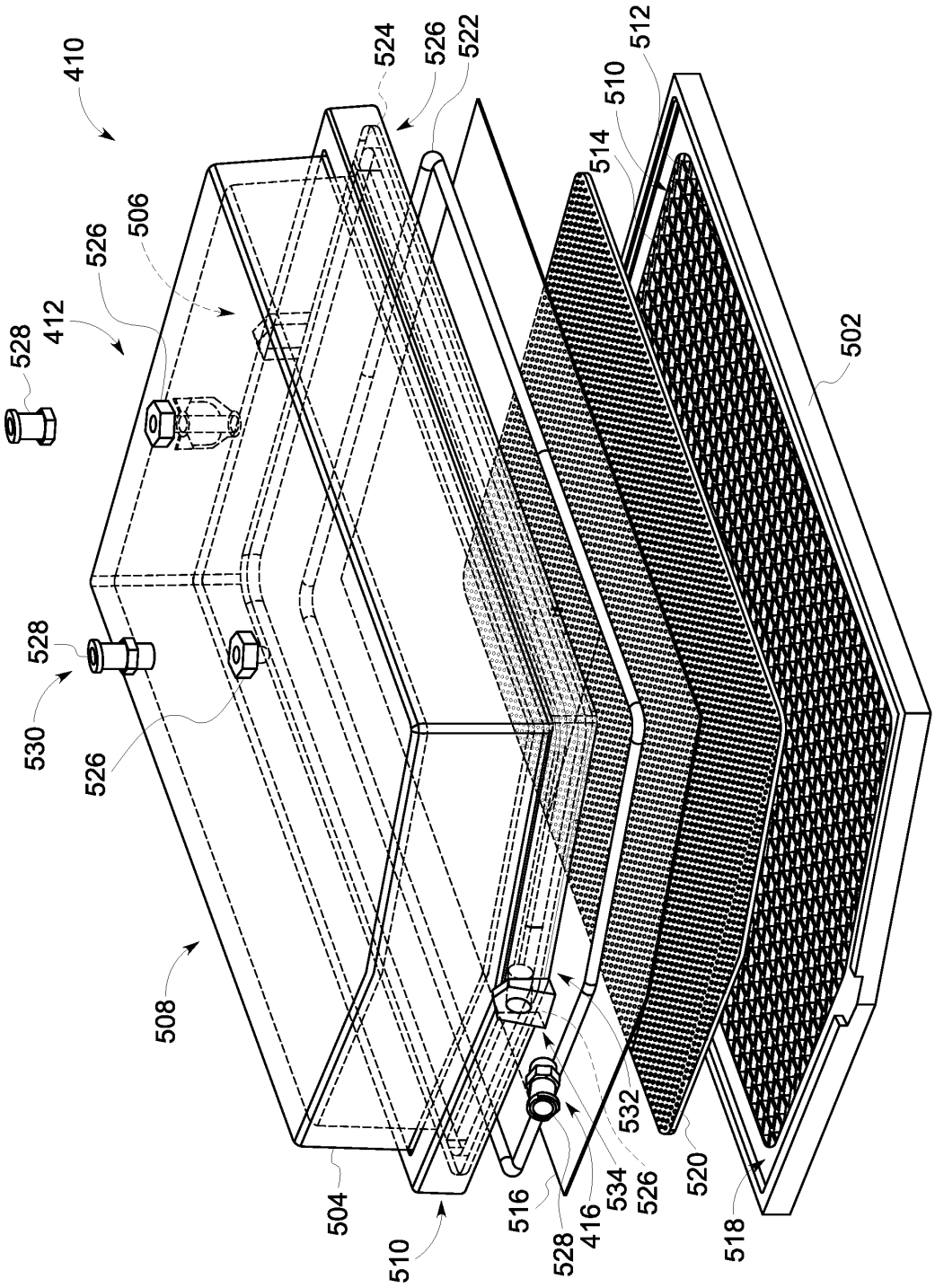
410
524
526
522
512
510
514
506
526
412
528
502
528
530
526
508
504
510
516
528
416
534
526
532
520
518

FIG. 9

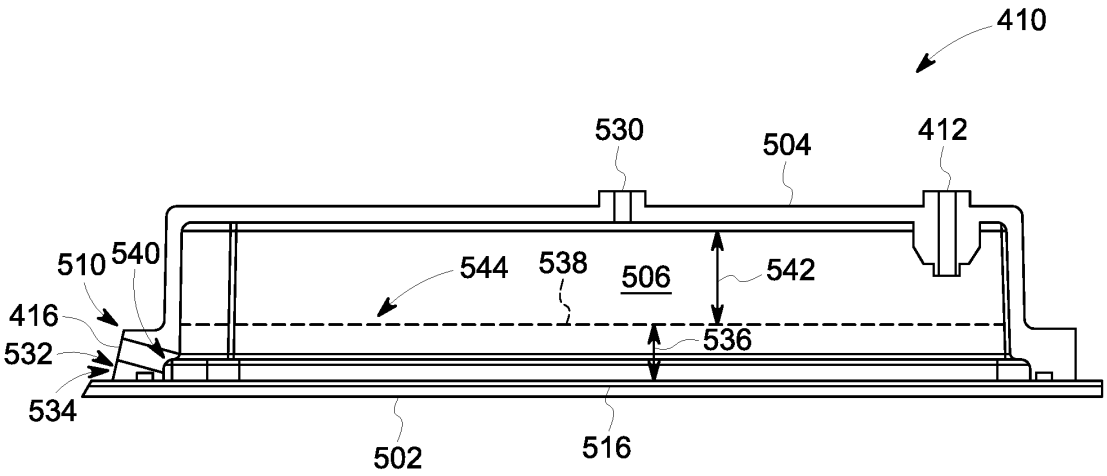

FIG. 10

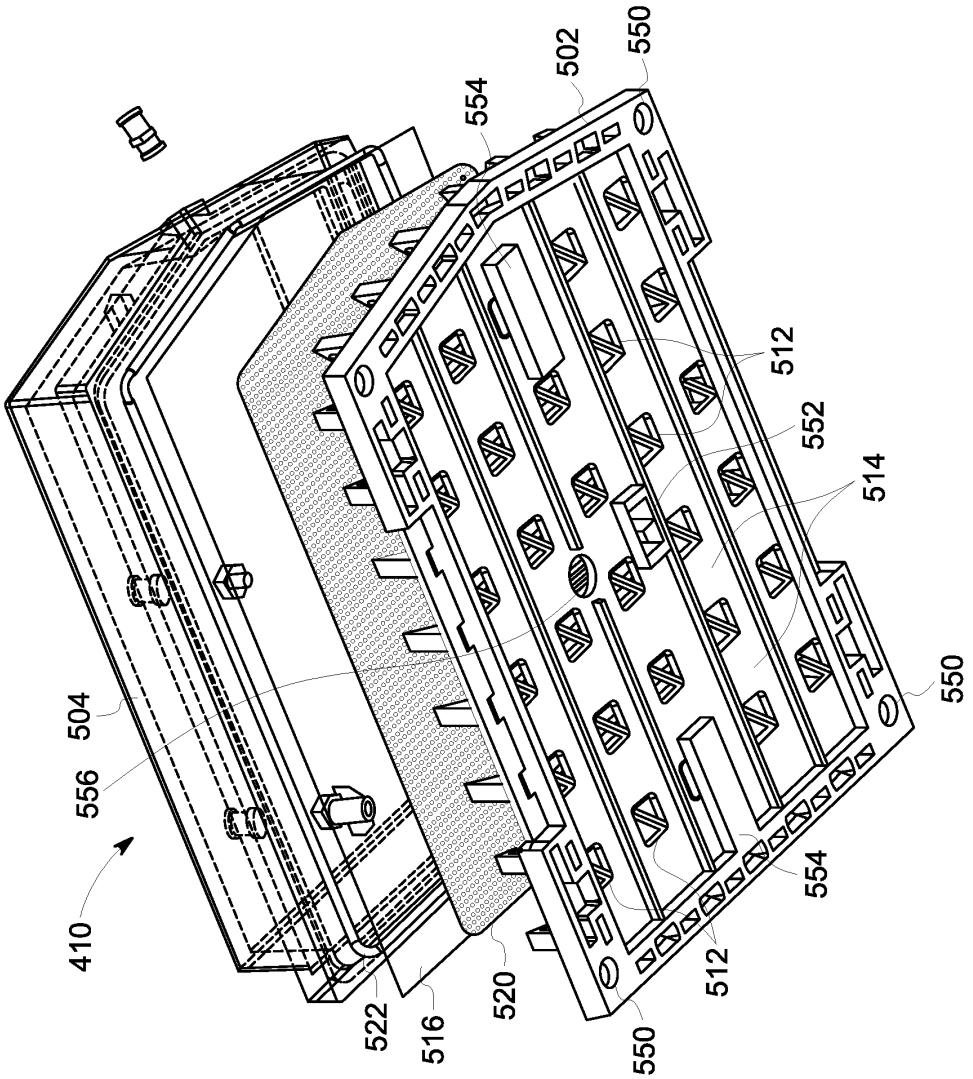

FIG. 11

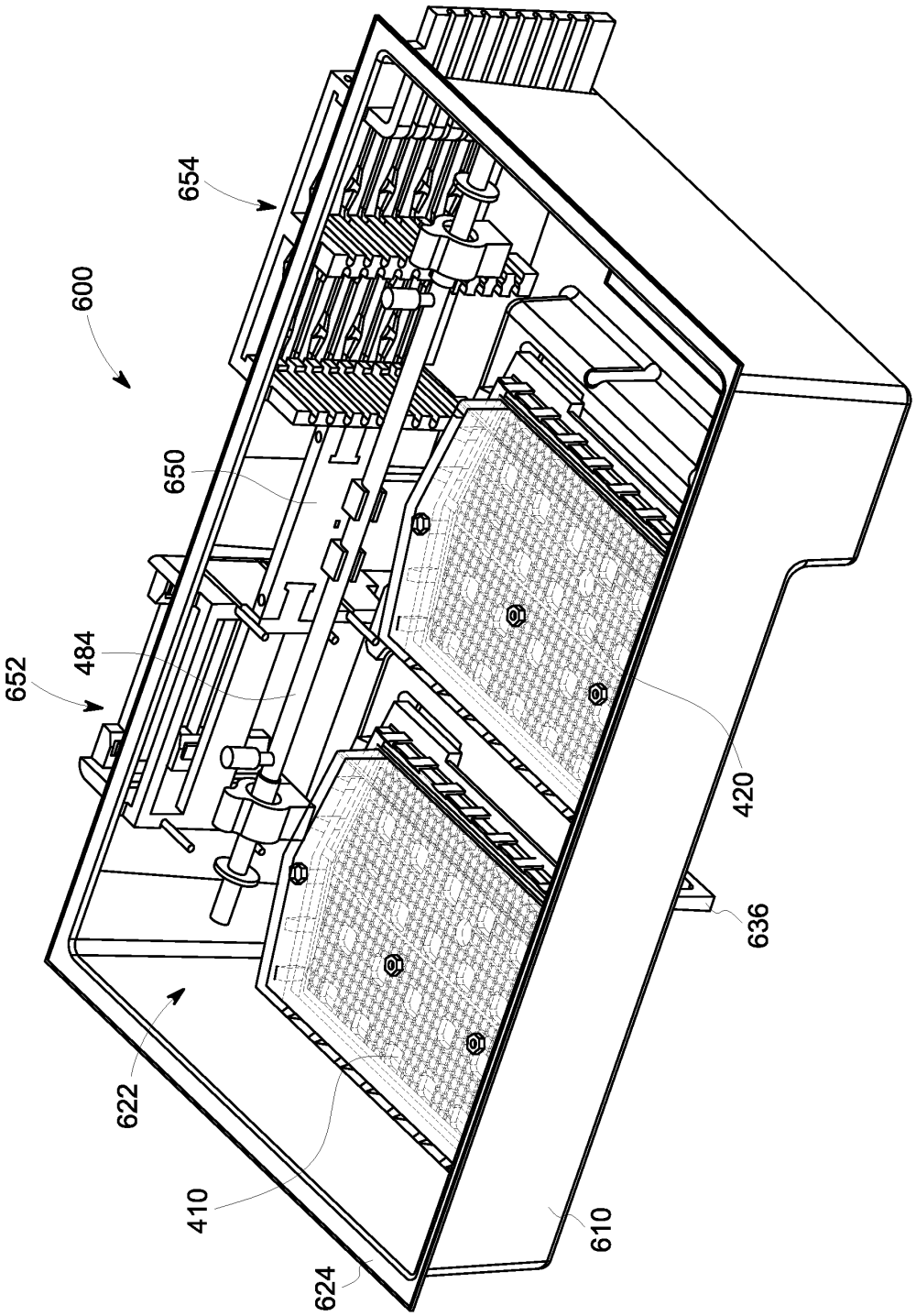

FIG. 12

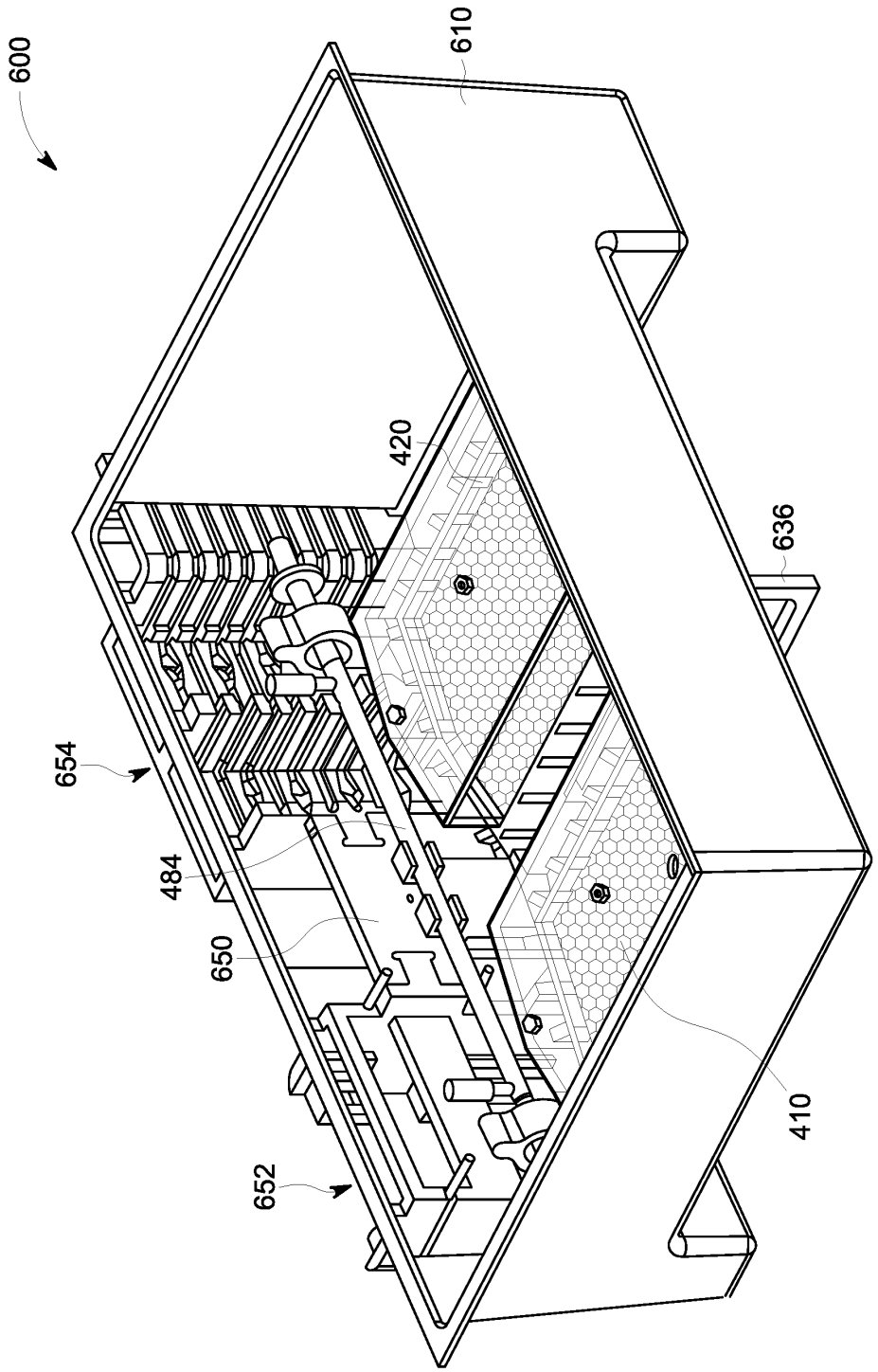

FIG. 13

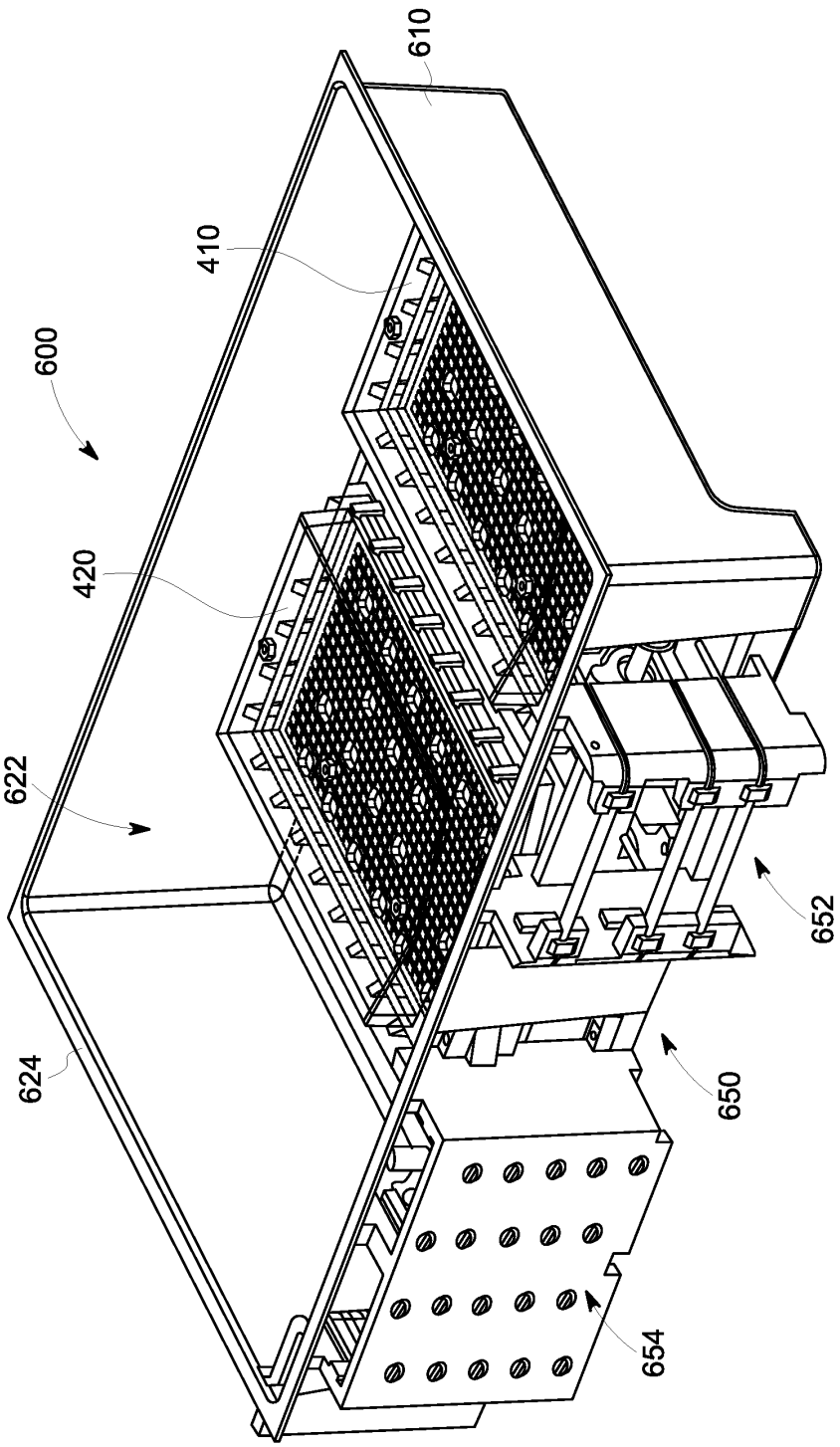

FIG. 14

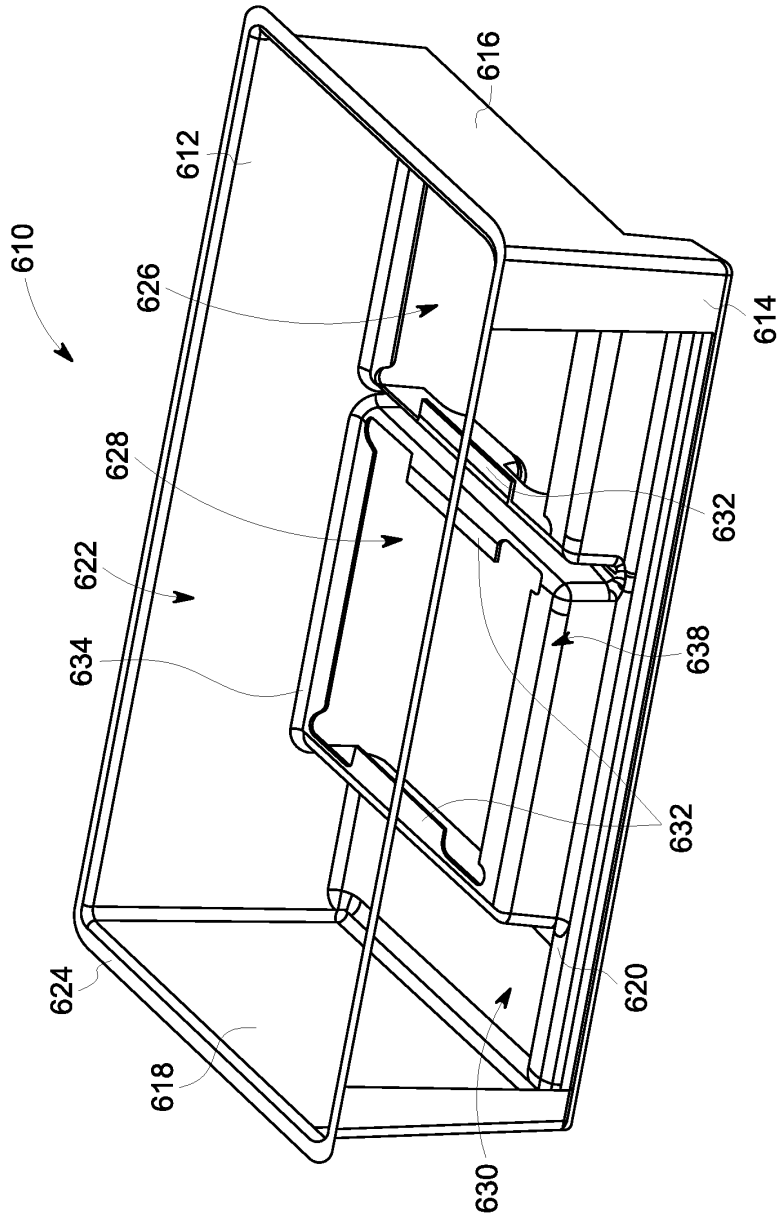

FIG. 15

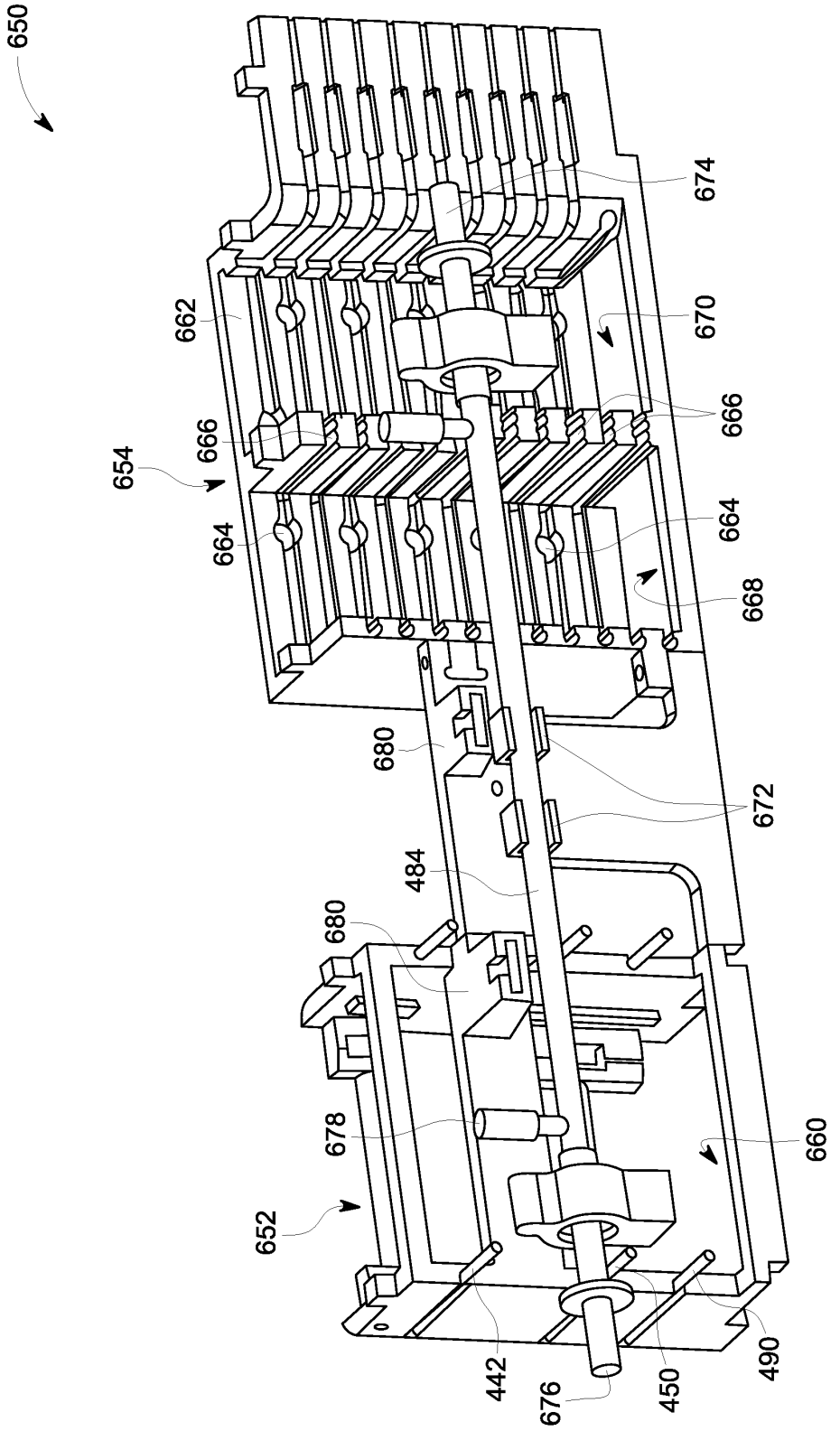
650
674
662
670
666
654
666
664
664
668
680
672
484
680
678
660
652
442
676
450
490

FIG. 16

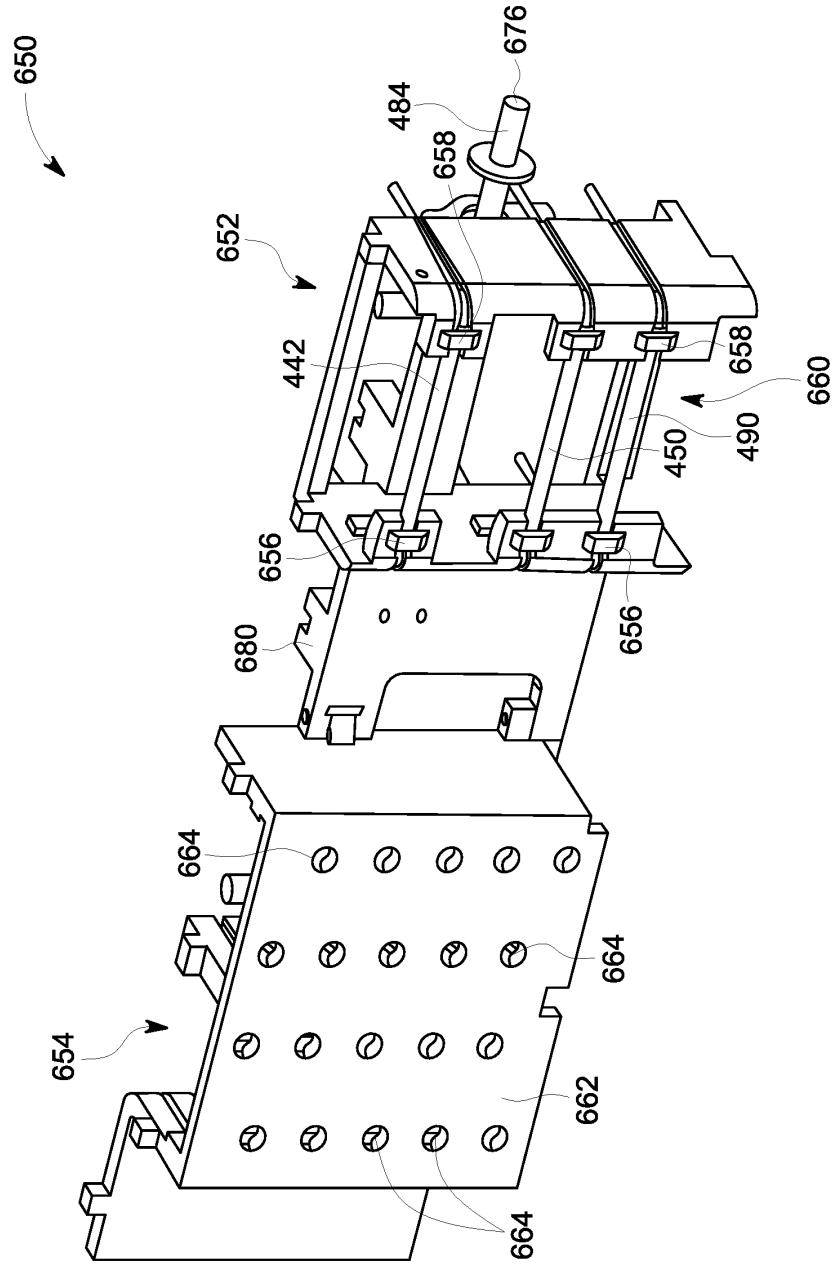
650
676
484
658
652
442
658
660
490
450
656
656
680
664
664
654
662
664

FIG. 17

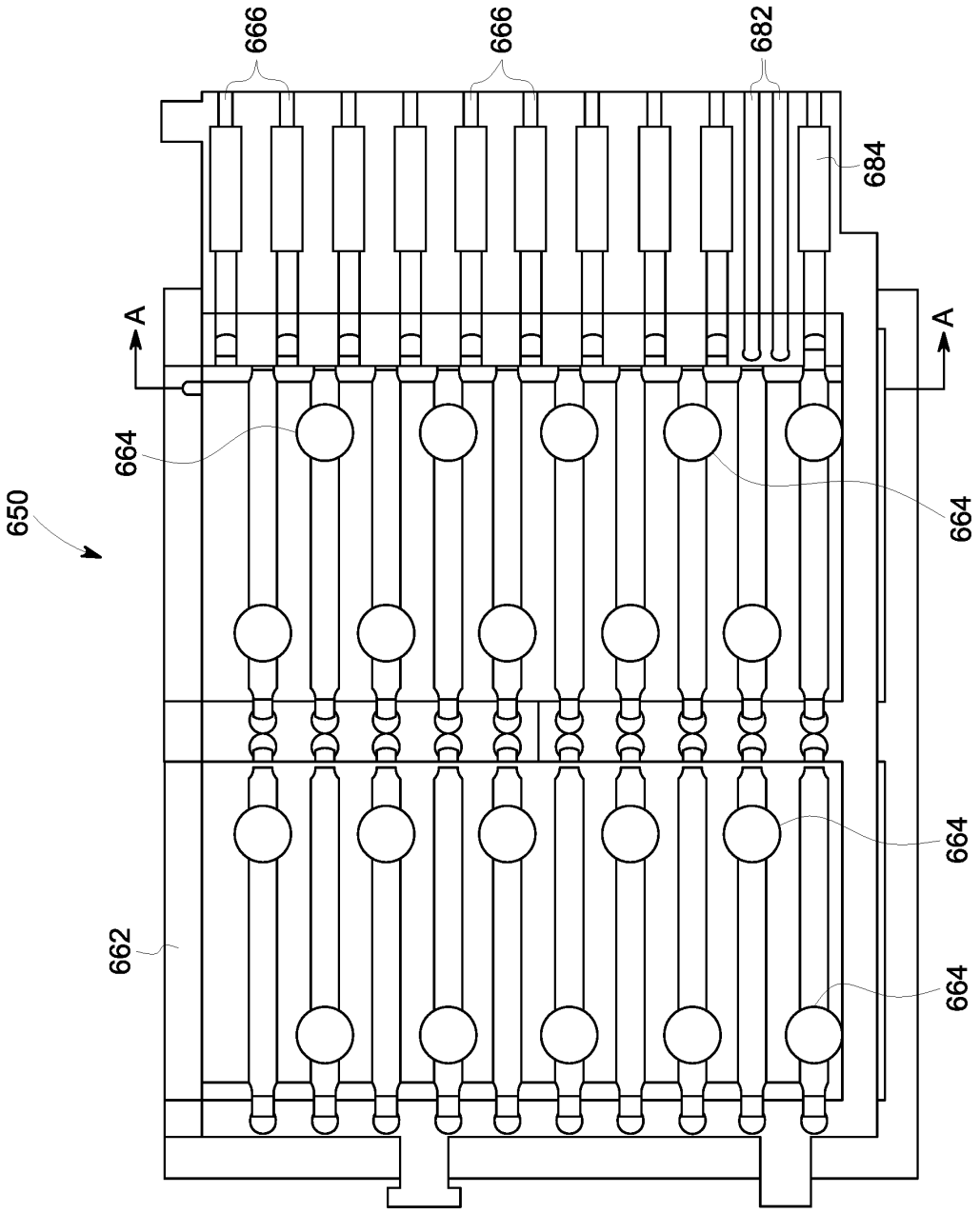

FIG. 18

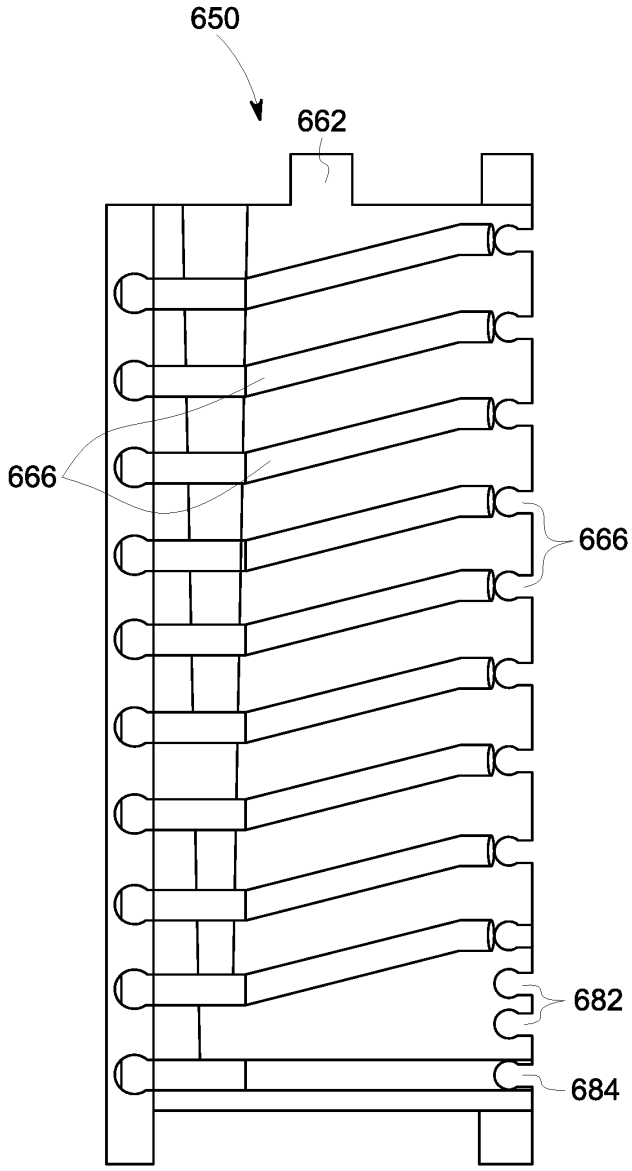

FIG. 19

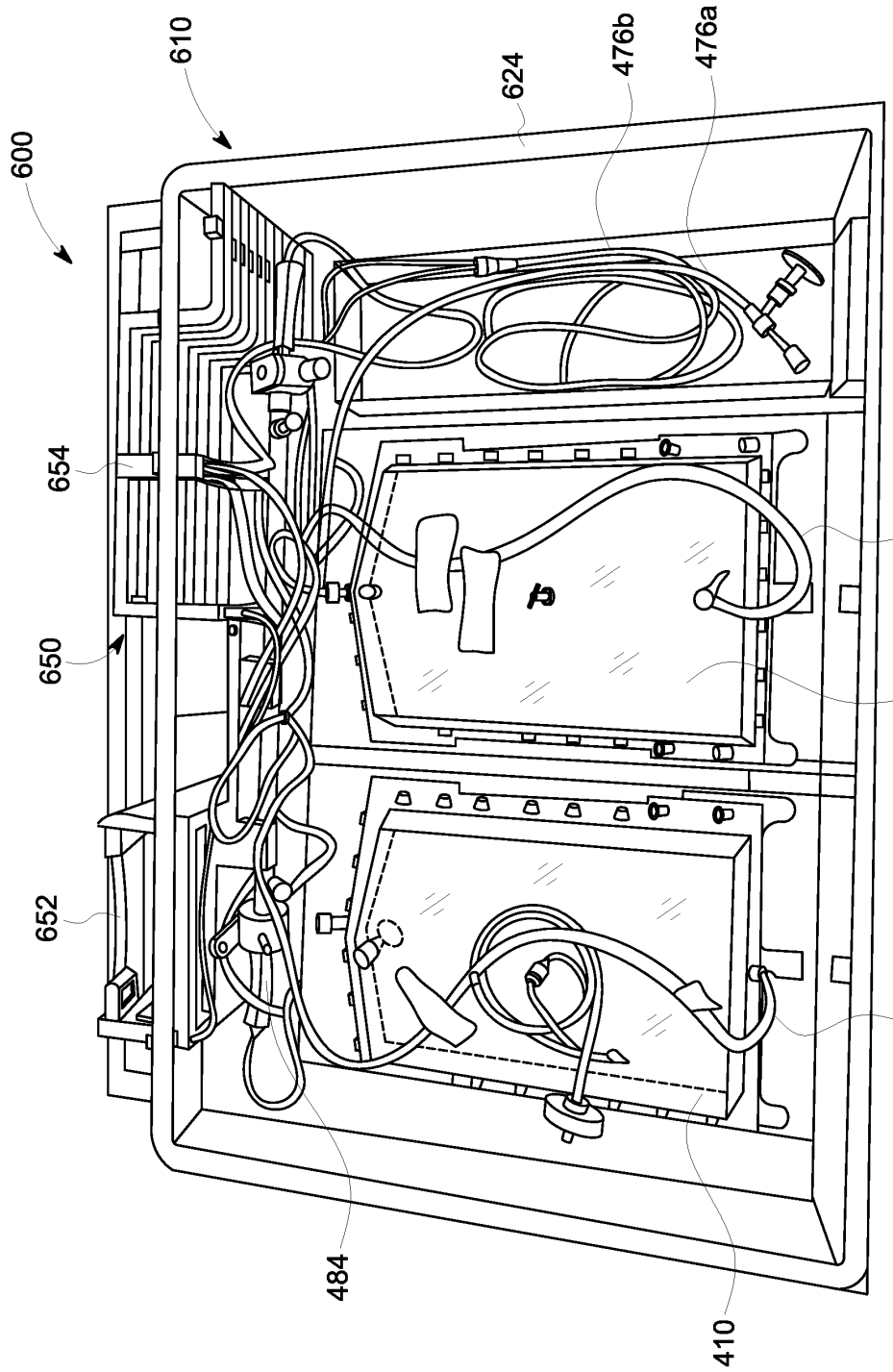

FIG. 20

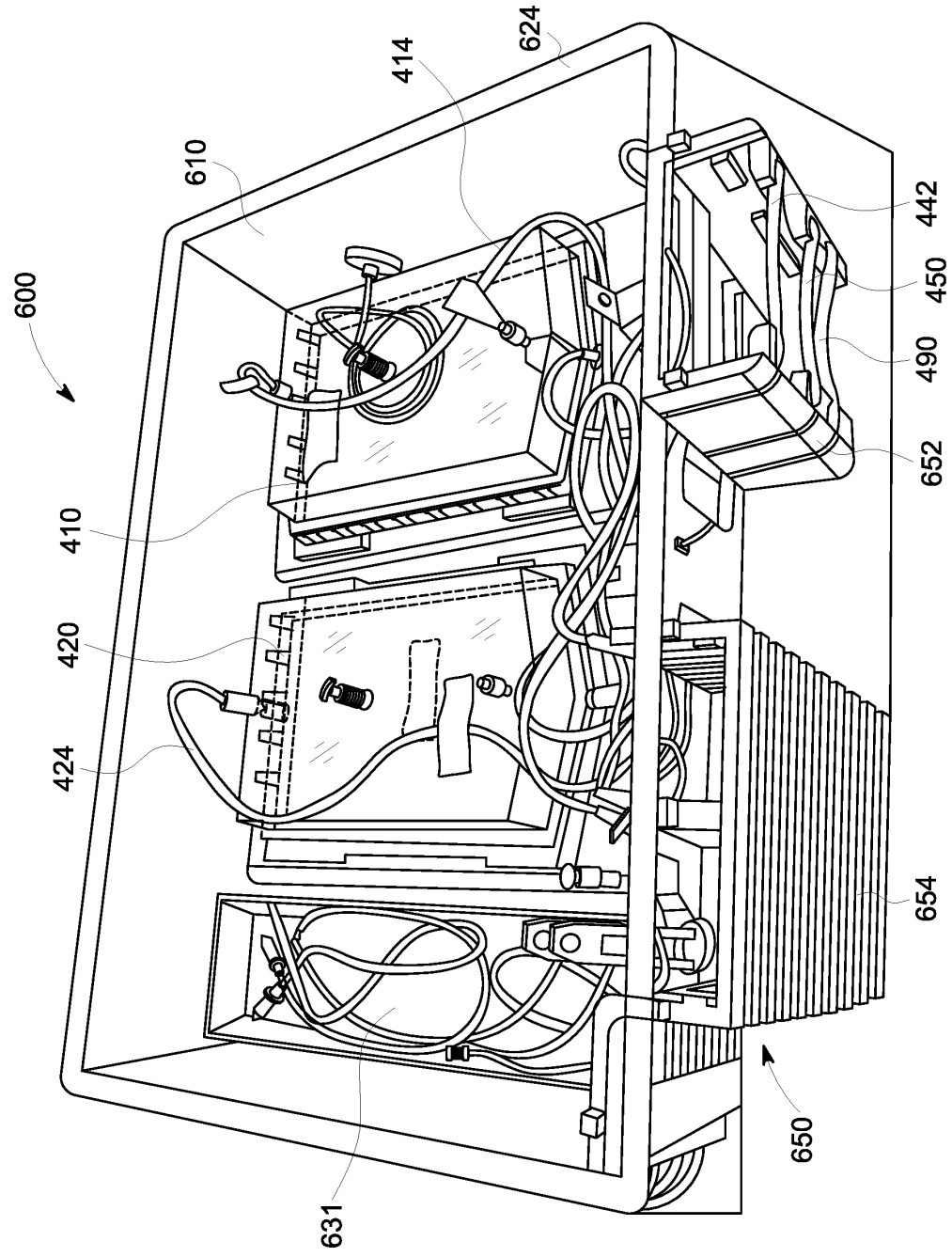

FIG. 21

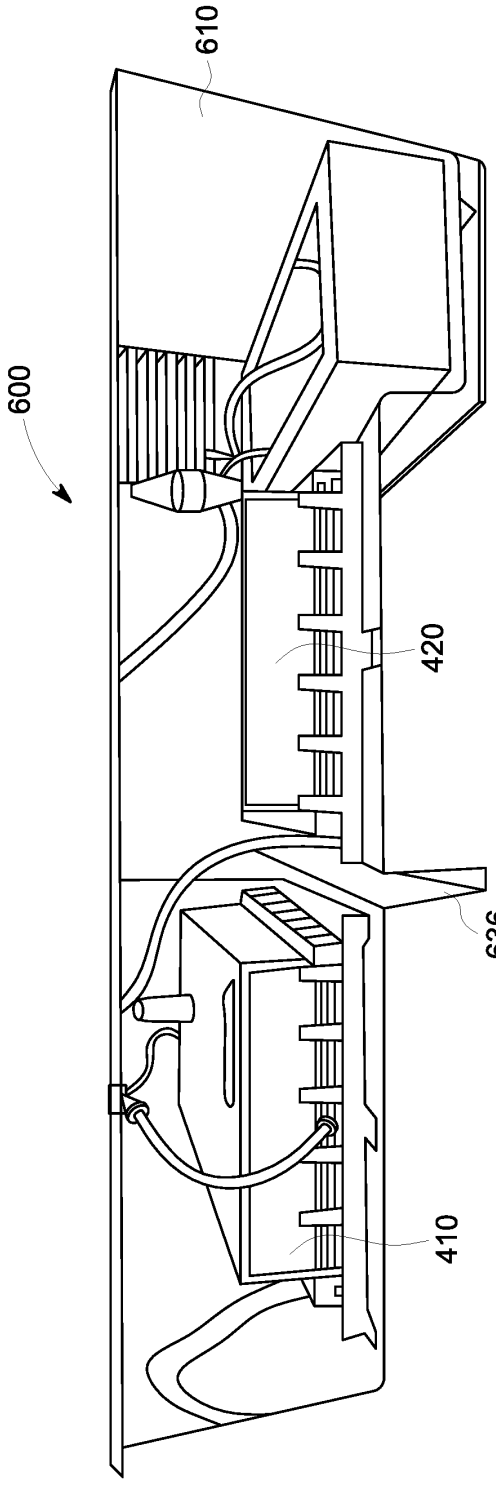

FIG. 22

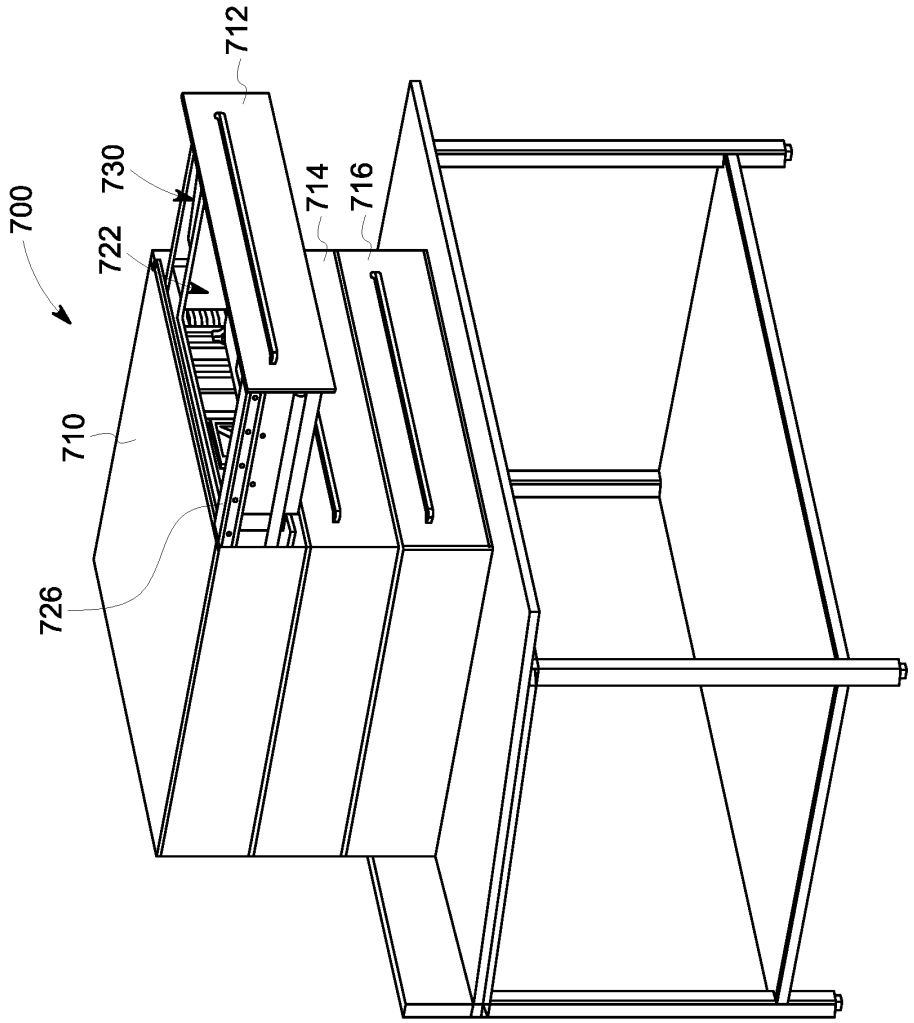

FIG. 23

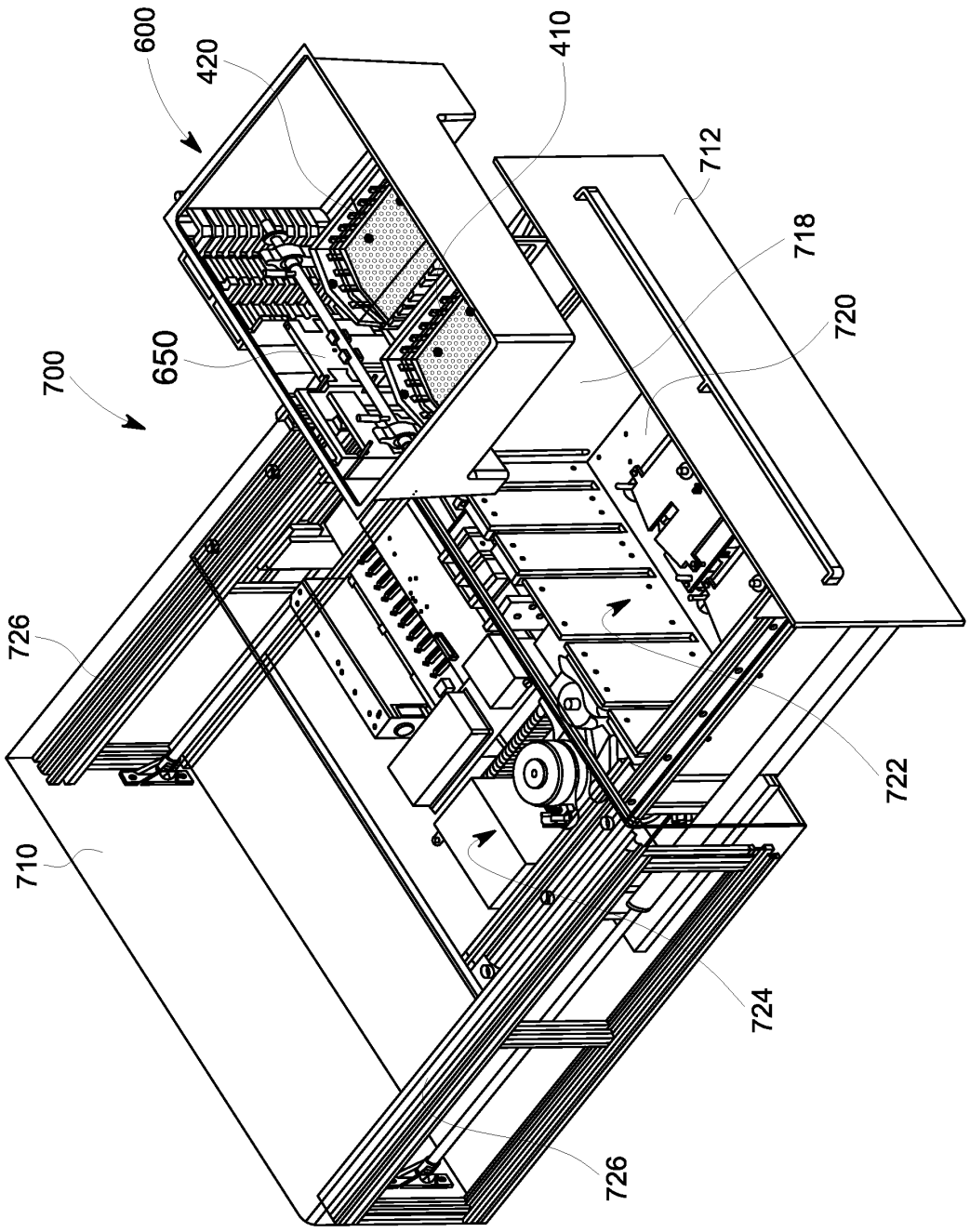

FIG. 24

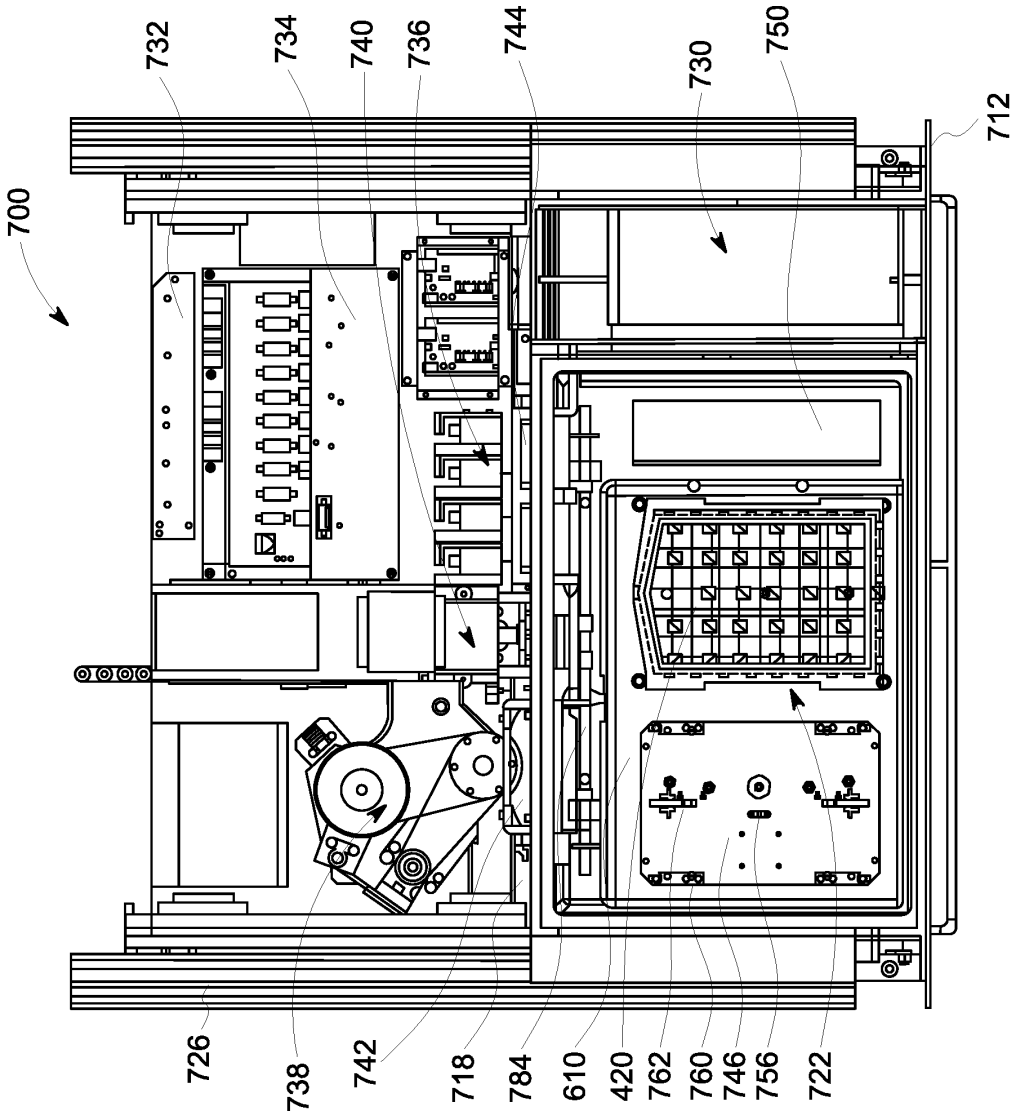
700
712
730
732
734
736
738
740
742
744
750
718
722
726
746
756
760
762
784
610
420

FIG. 25

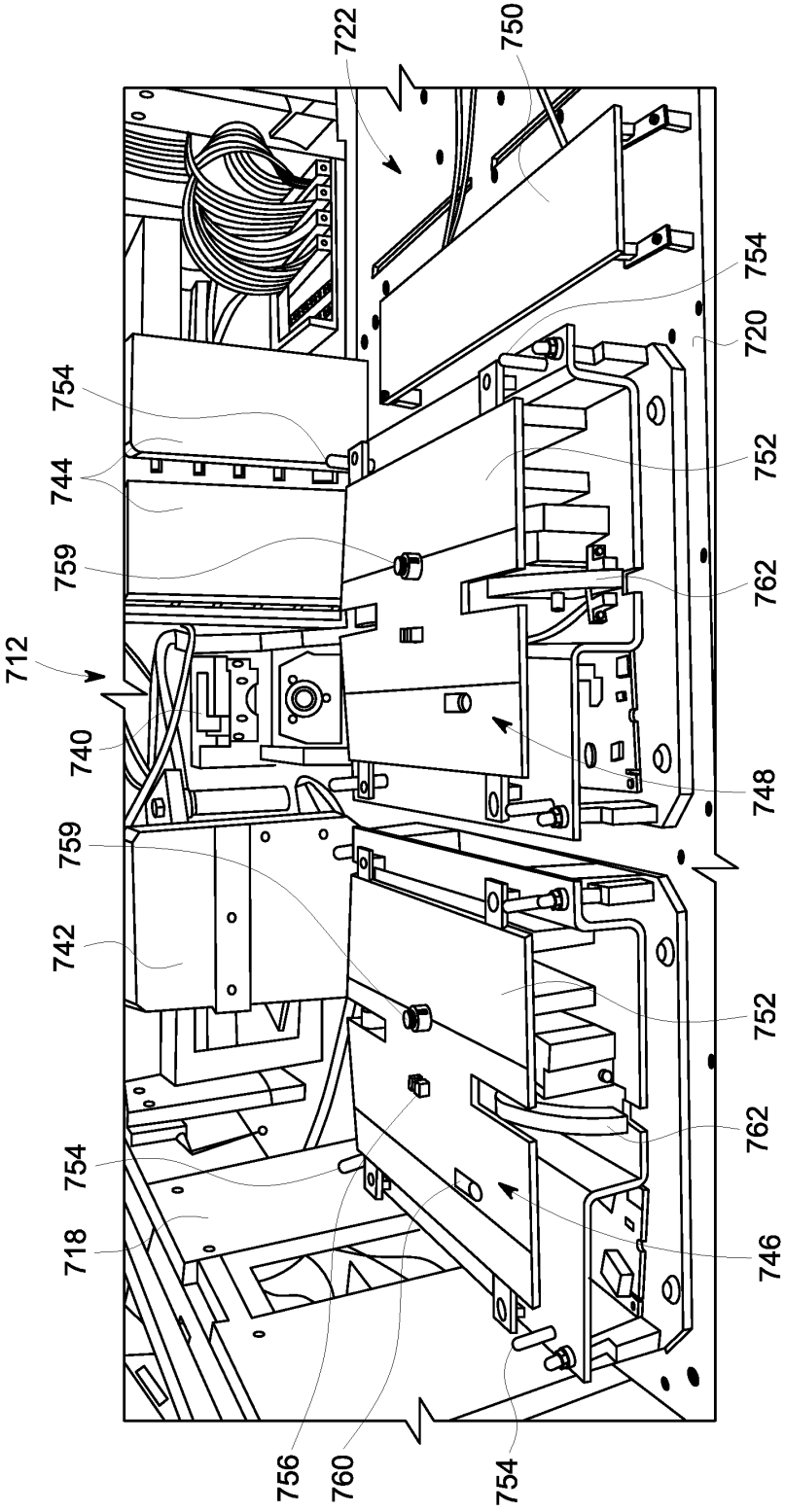
722
750
754
720
754
744
752
759
762
712
740
748
759
742
752
762
754
718
746
756
760
754

FIG. 26

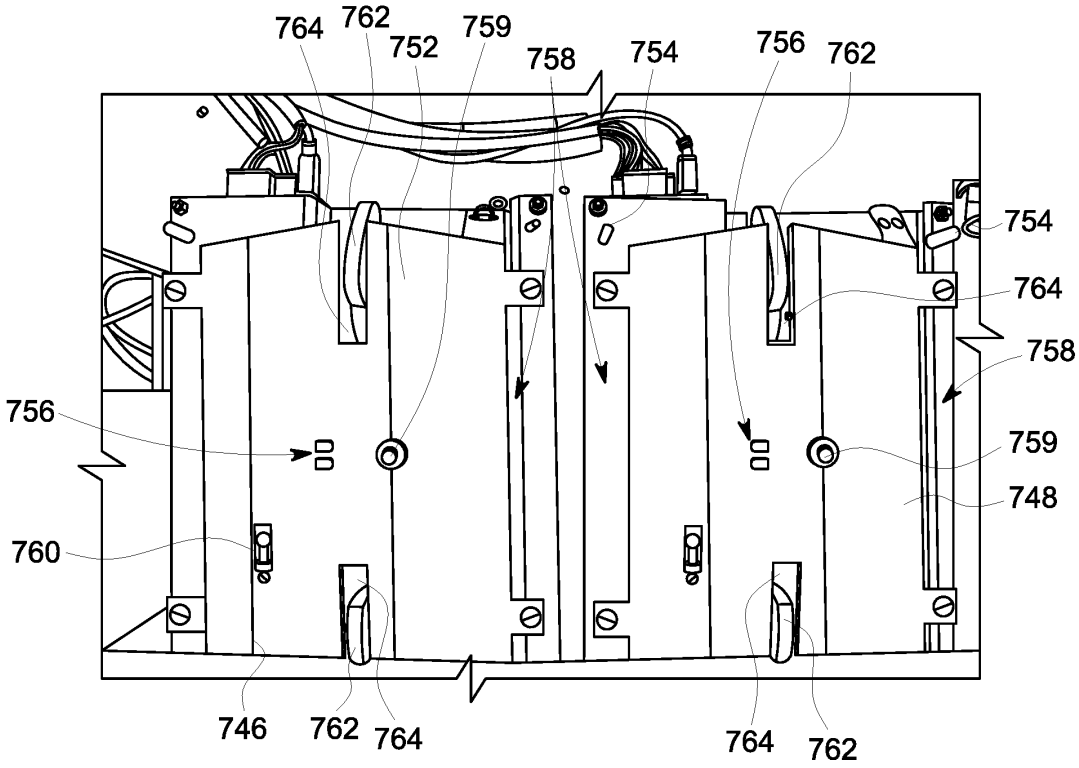
764
762
752
759
758
754
756
762
754
764
758
759
748
756
760
746
762
764
764
762

FIG. 27

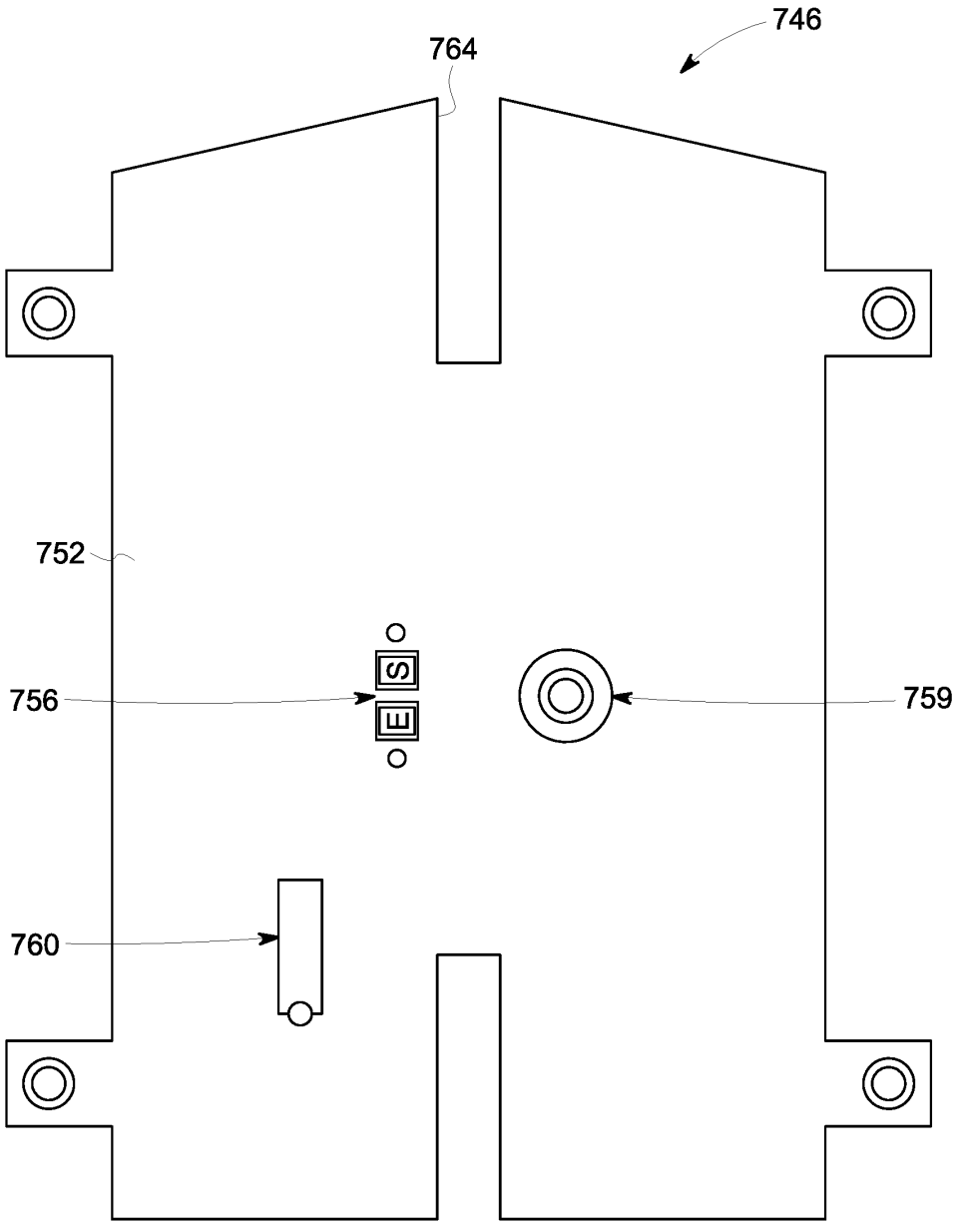

FIG. 28A

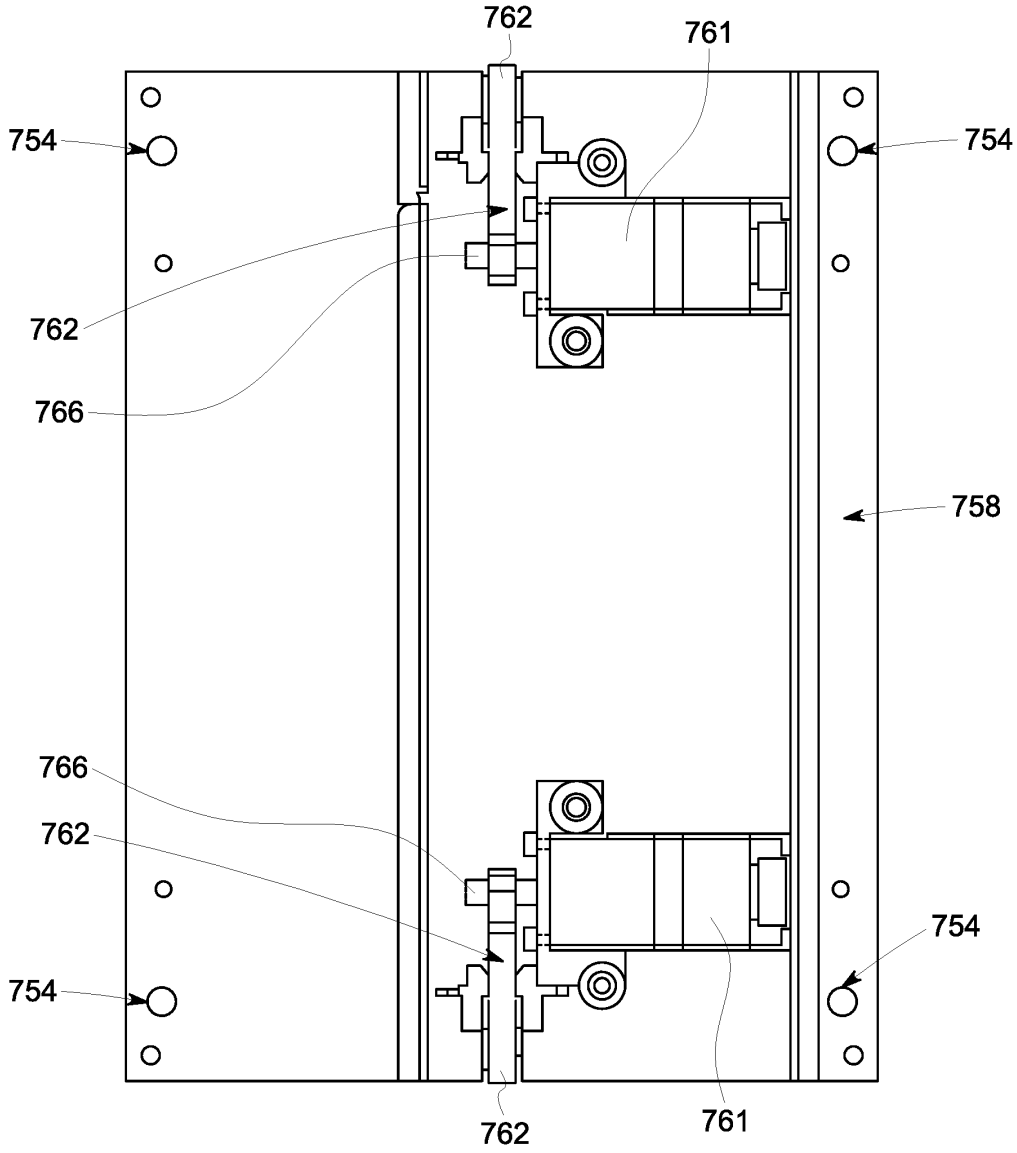

FIG. 28B

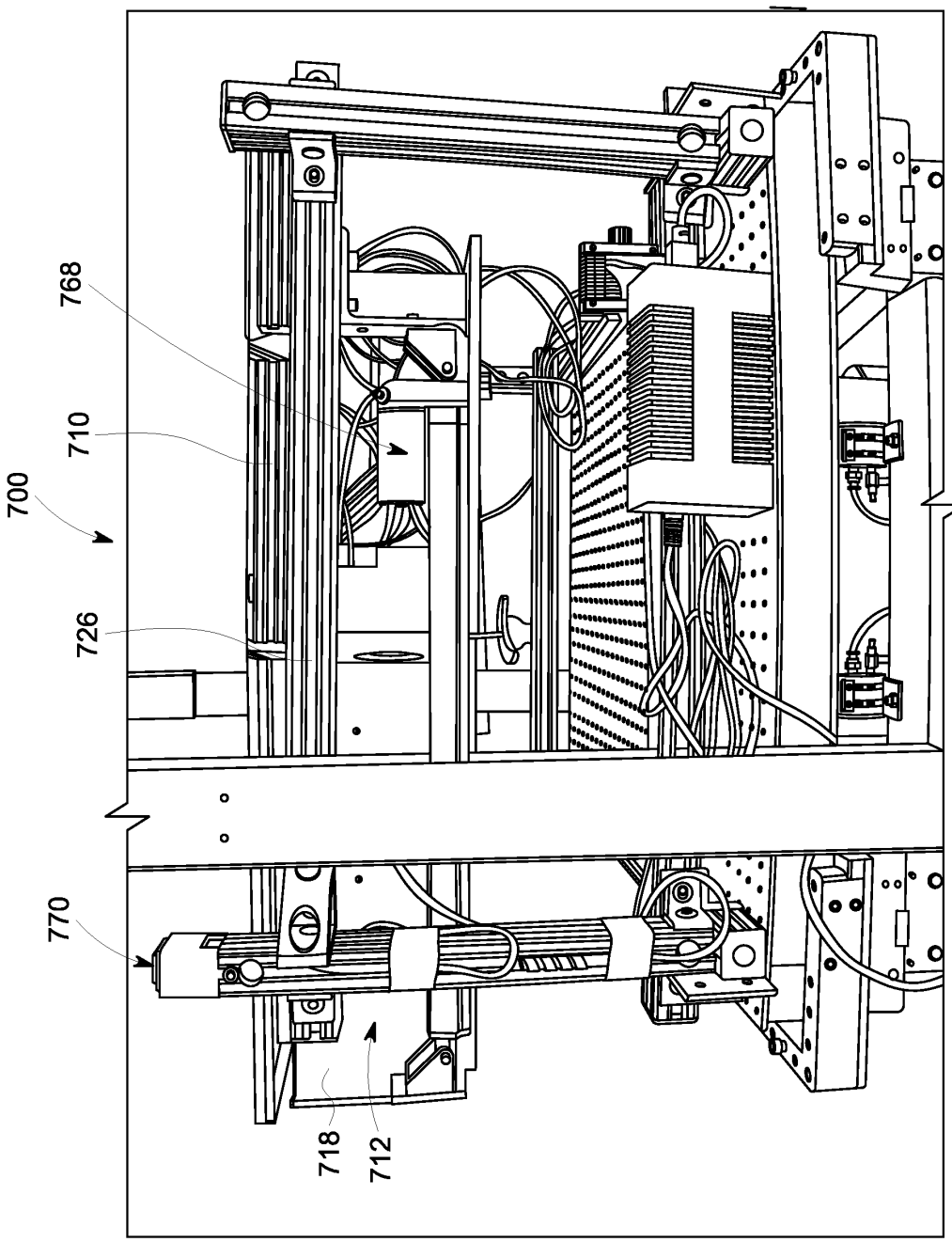

FIG. 29

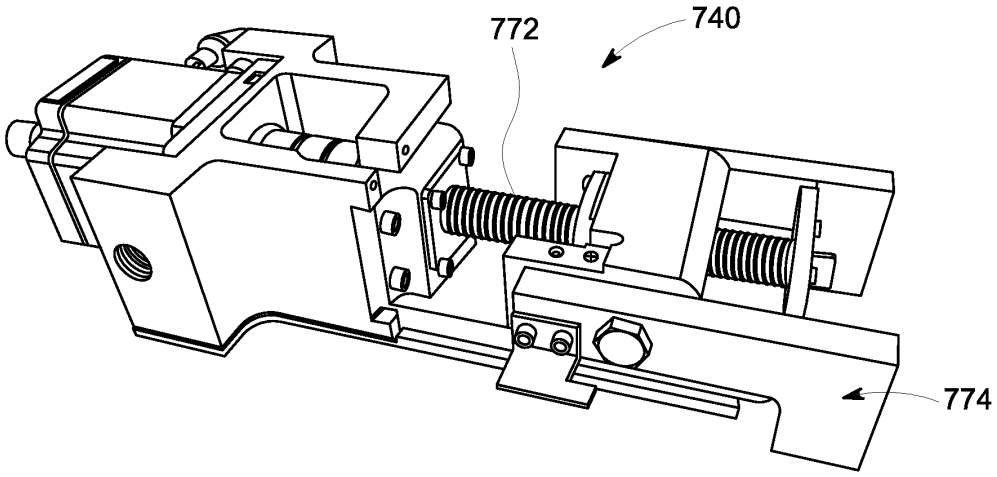

FIG. 30

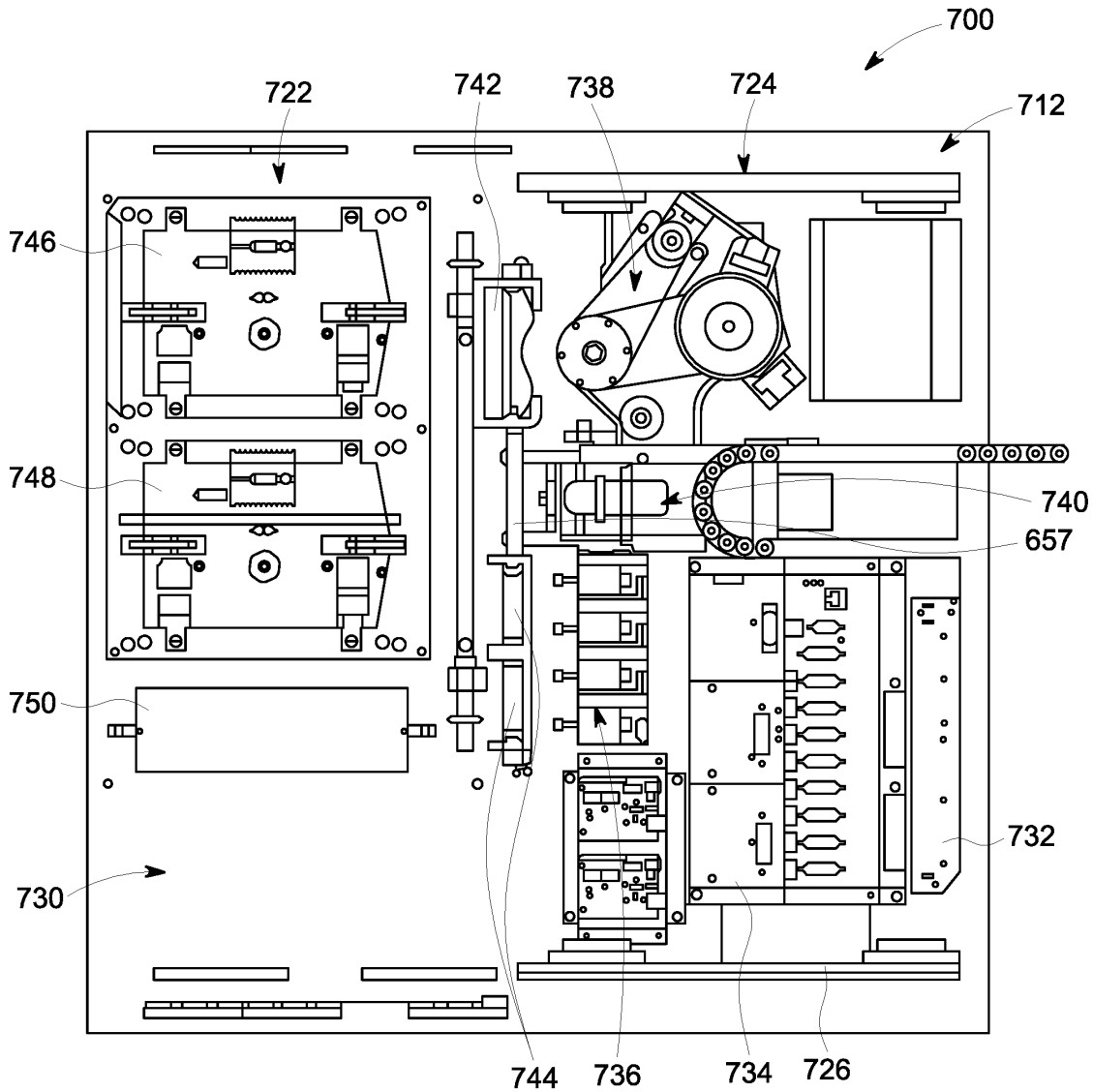
700
722
742
738
724
712
746
748
740
657
750
732
730
744
736
734
726

FIG. 31

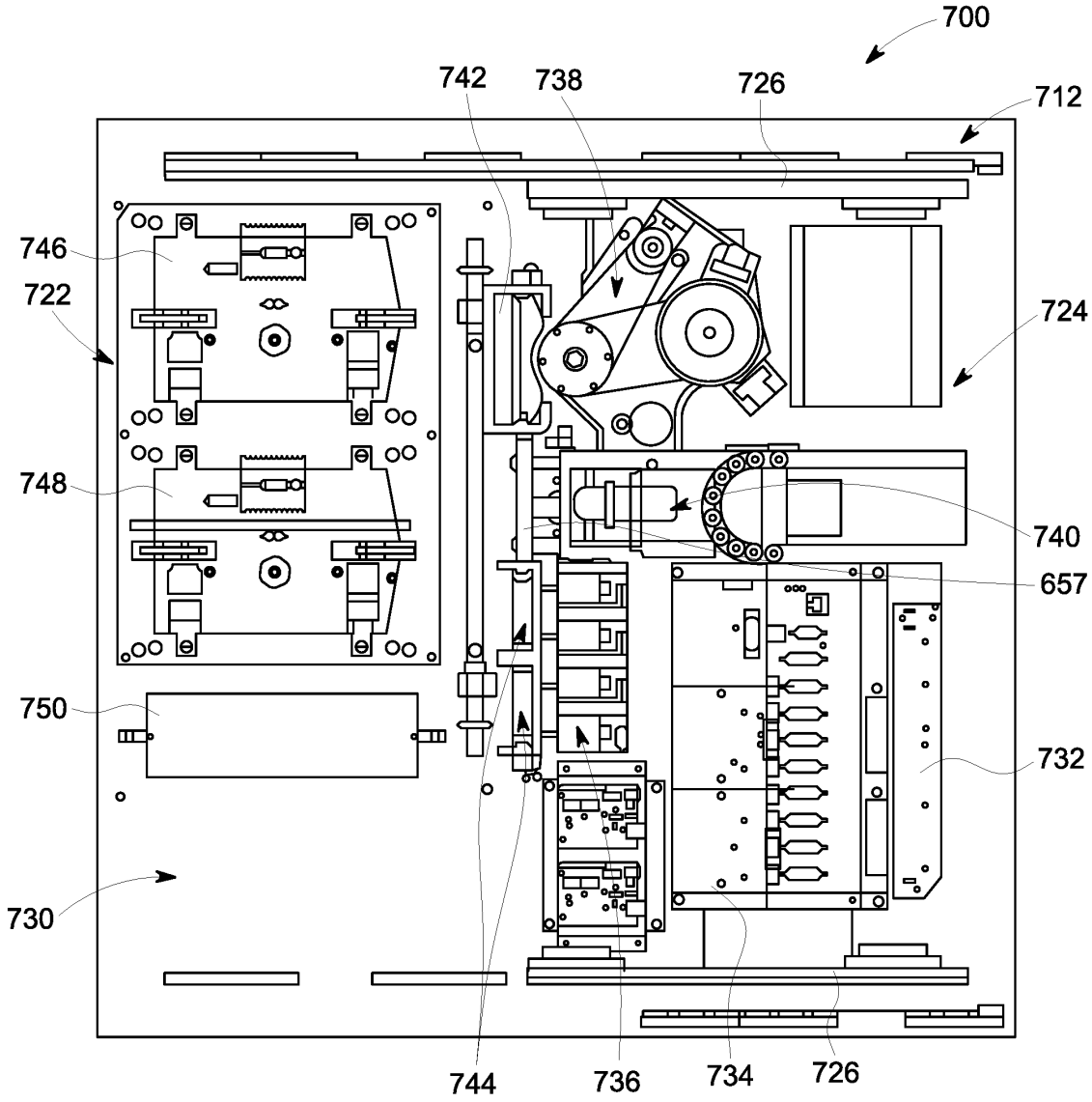
700
742
738
726
712
746
722
724
748
740
657
750
732
730
744
736
734
726

FIG. 32

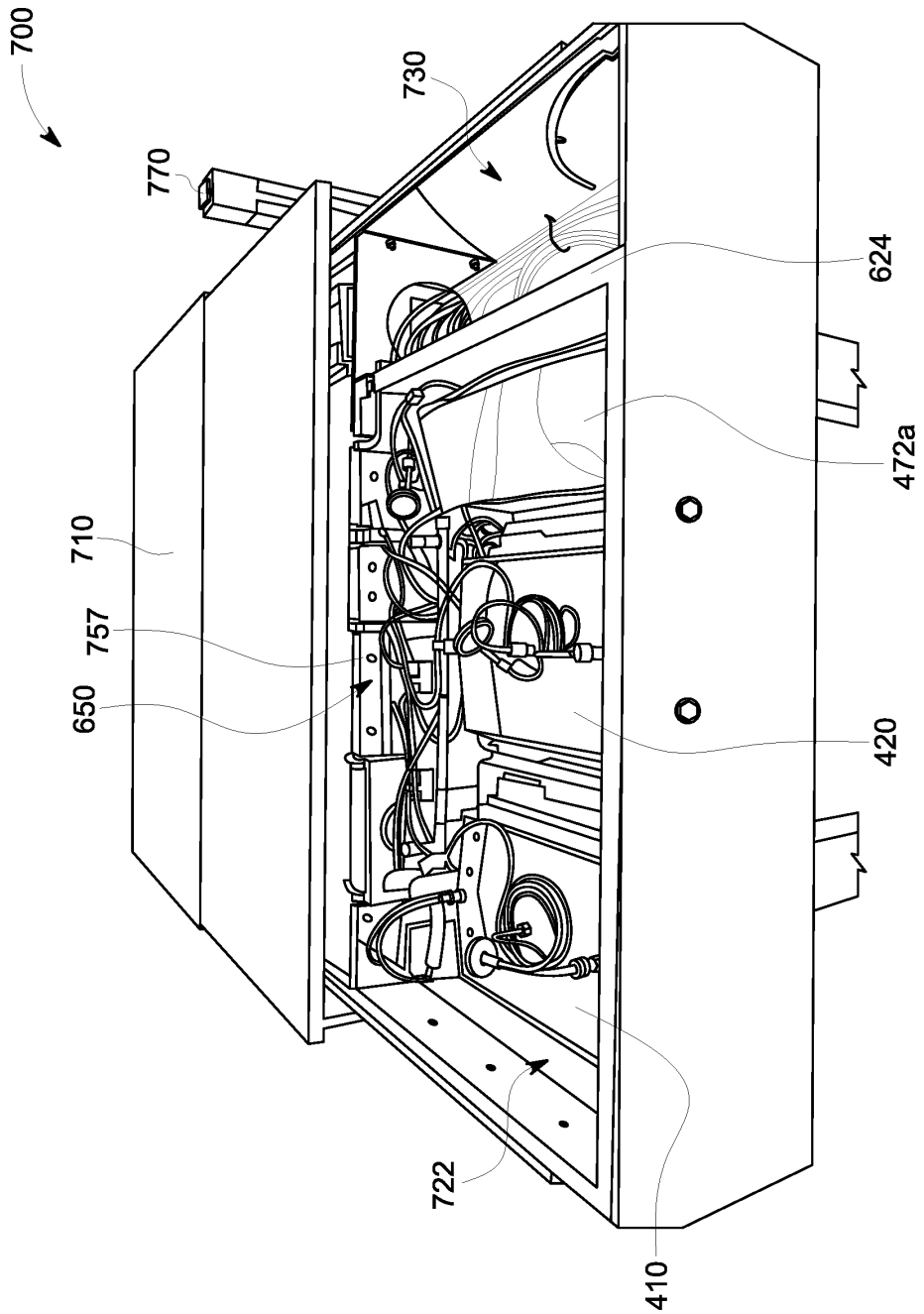

FIG. 33

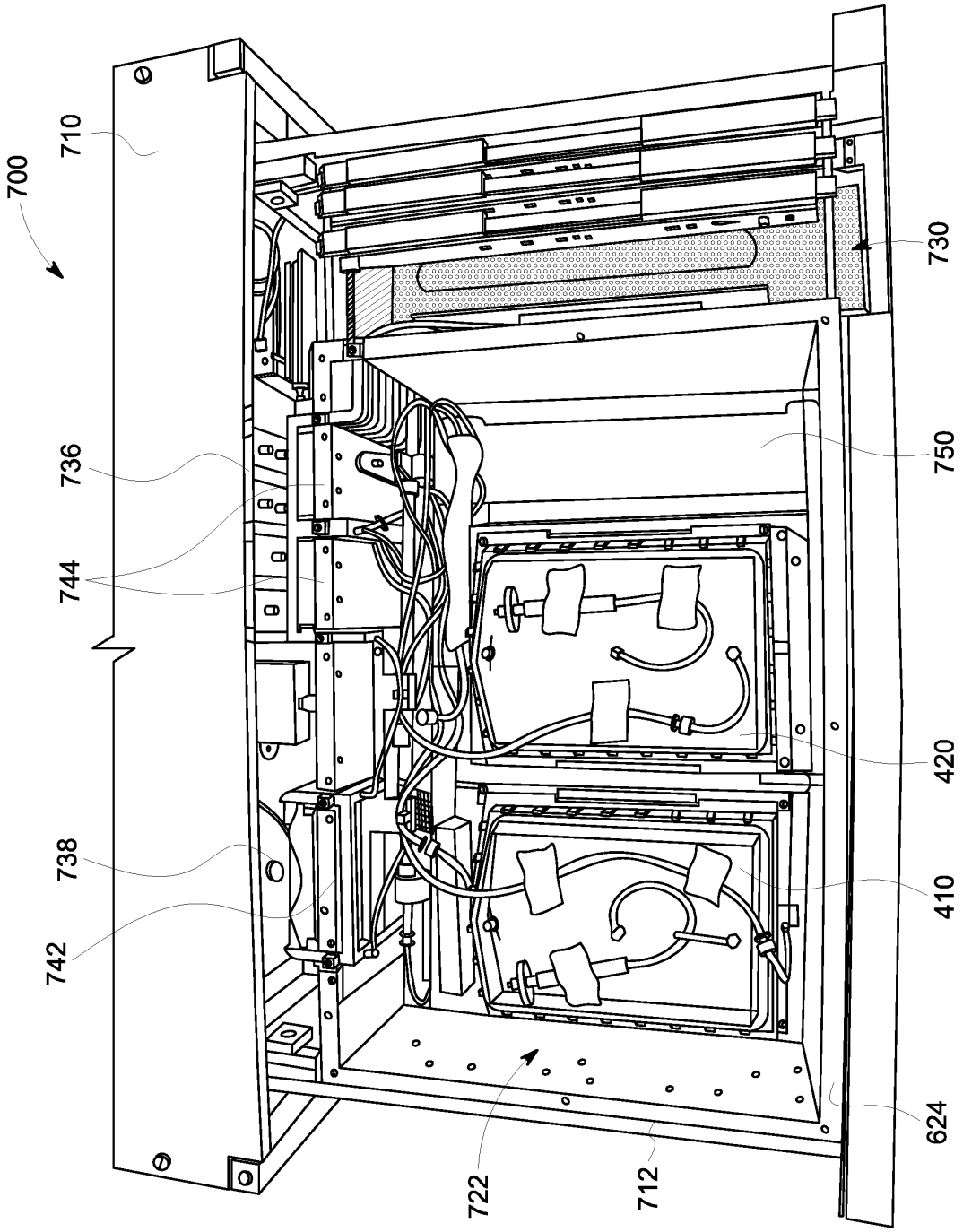

FIG. 34

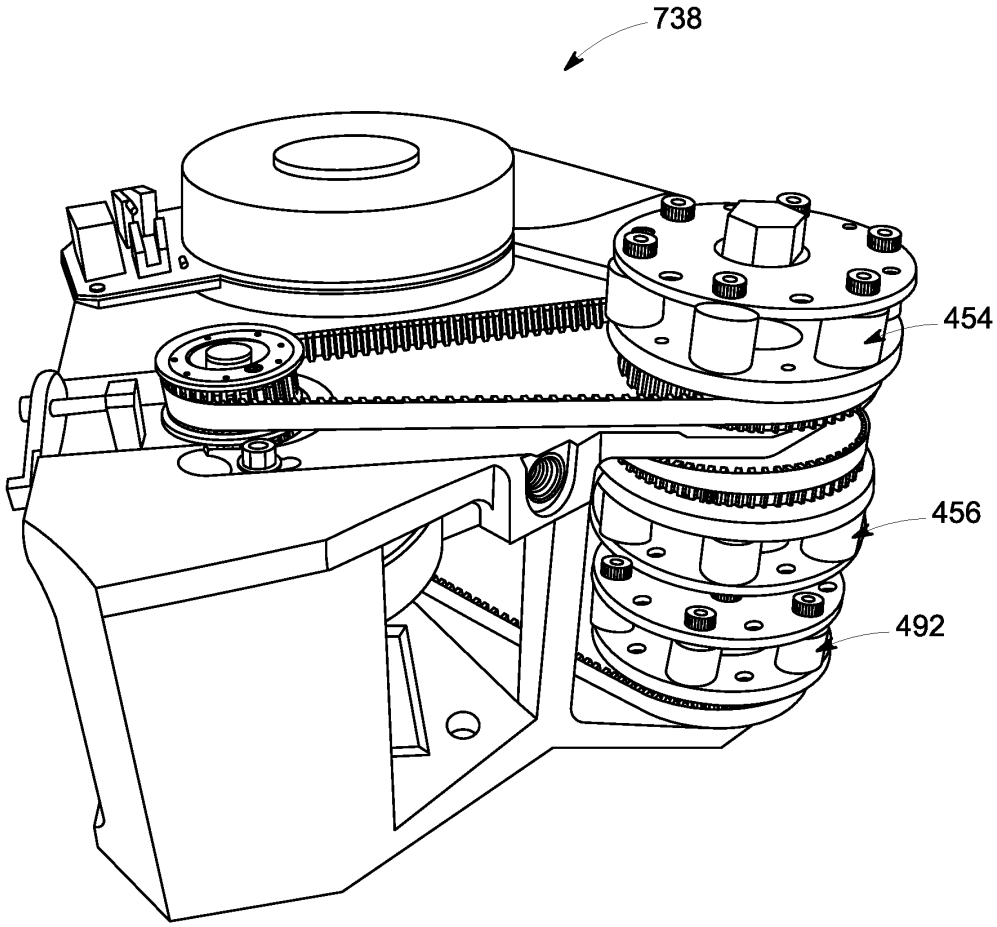

FIG. 35

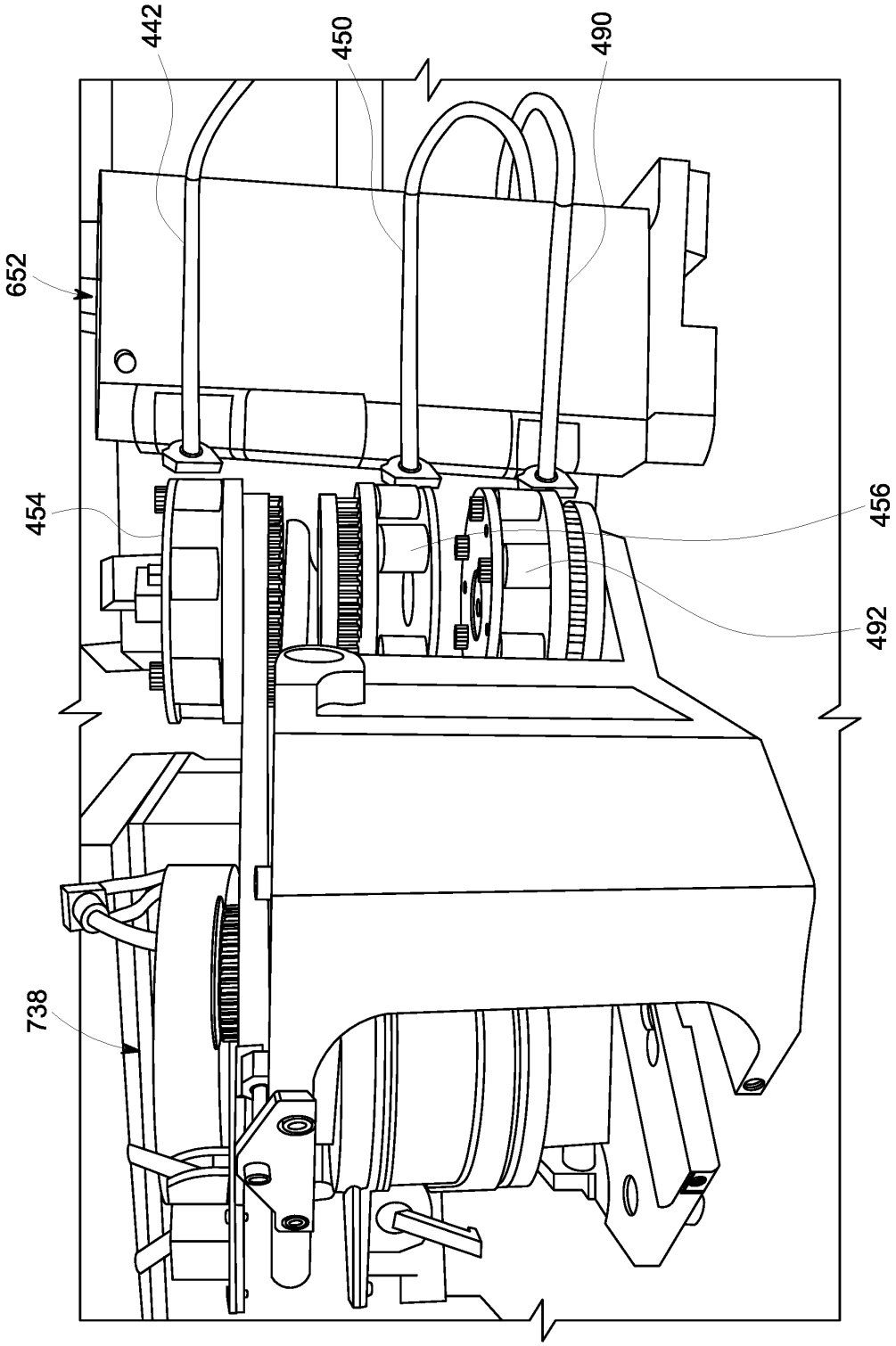

FIG. 36

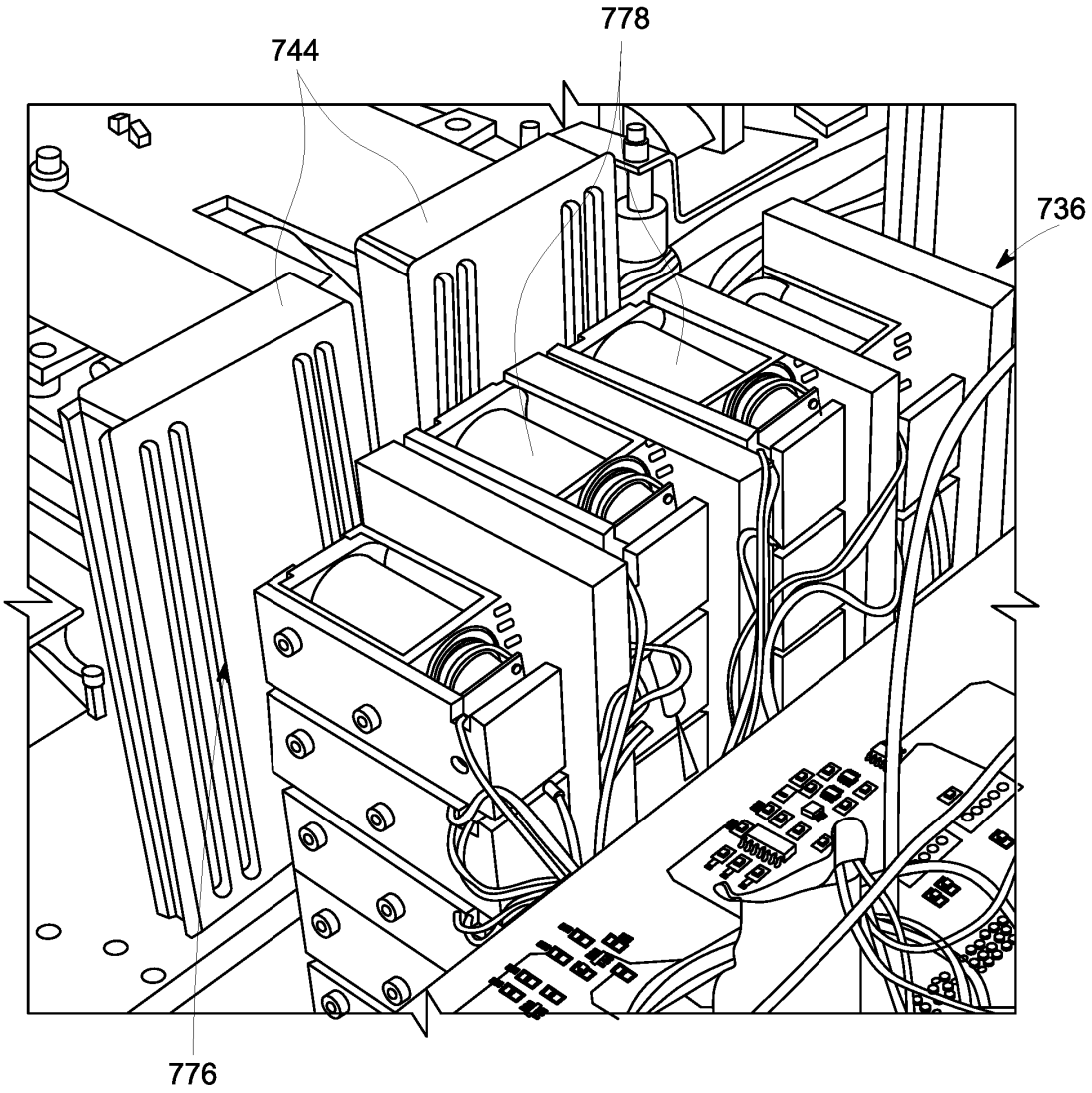

FIG. 37

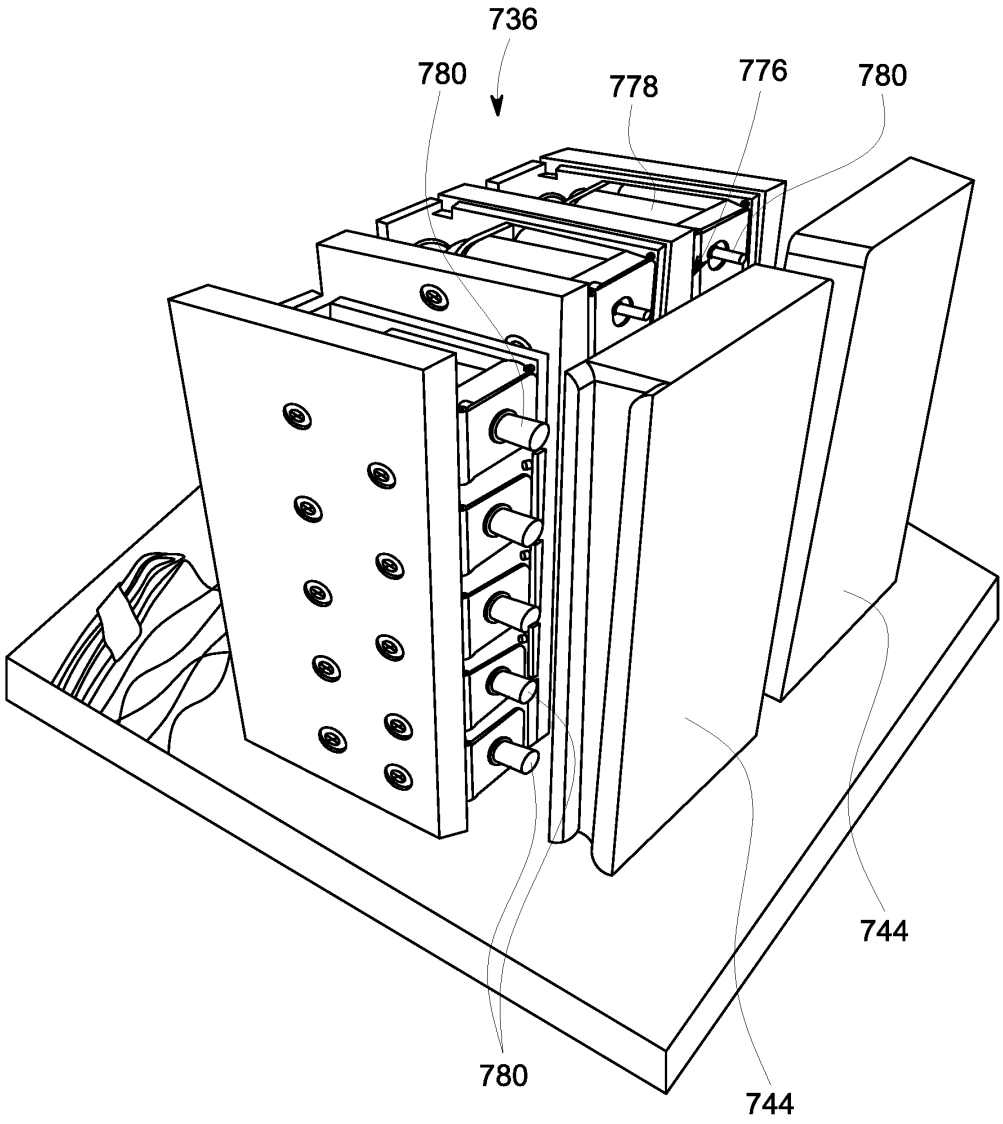

FIG. 38

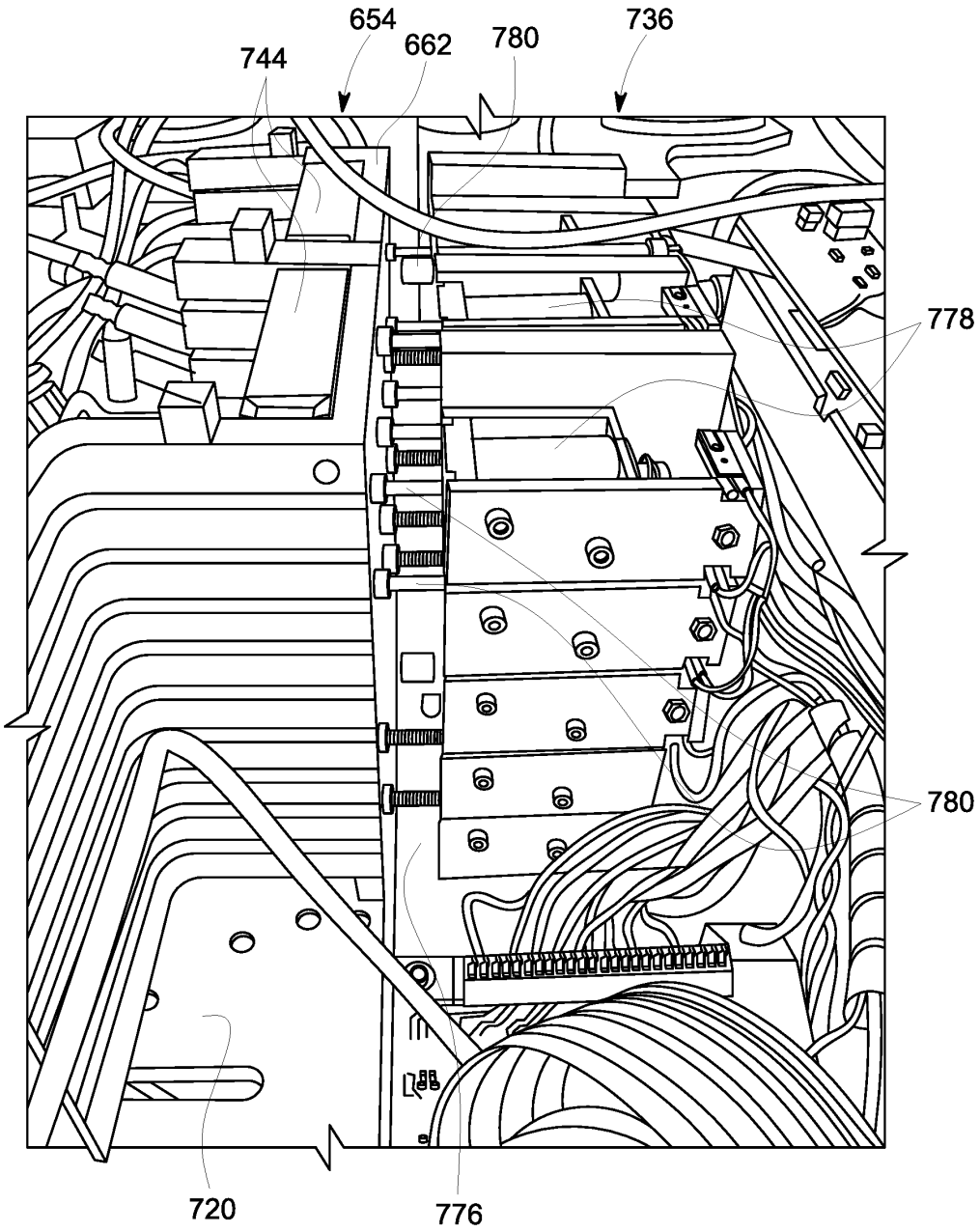

FIG. 39

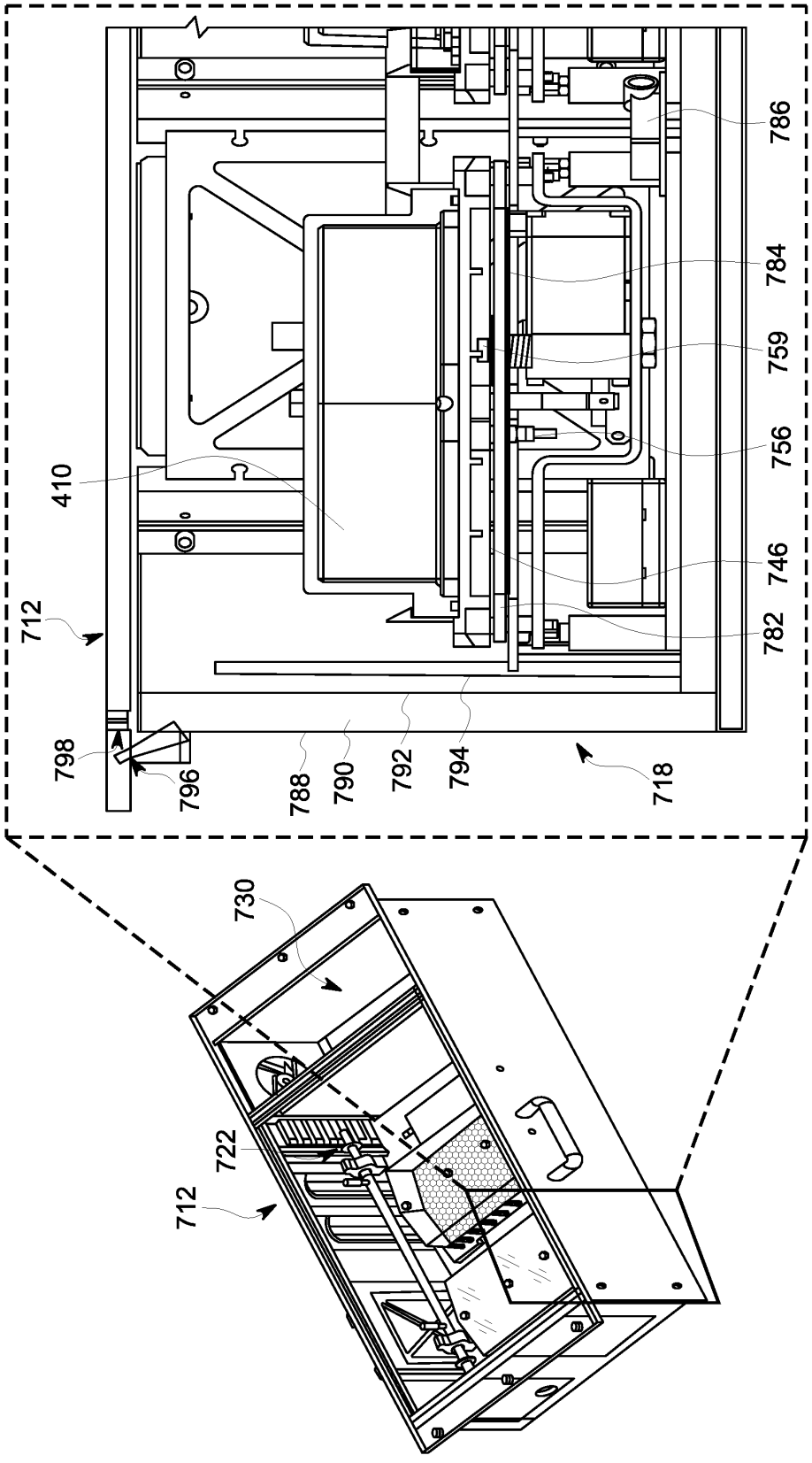
786
784
759
756
746
782
410
712
798
796
788
790
792
794
718
730
722
712

FIG. 40

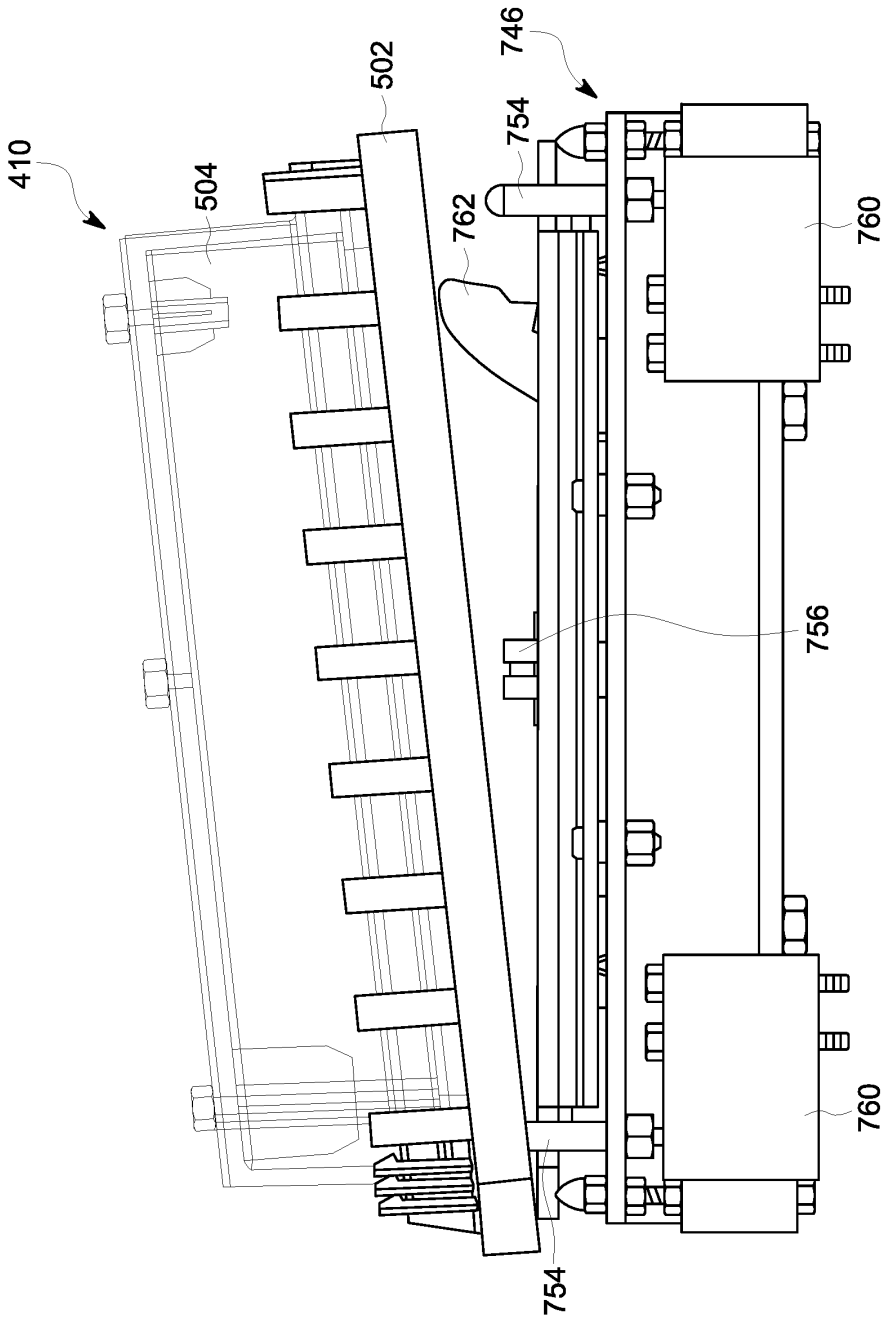

FIG. 41

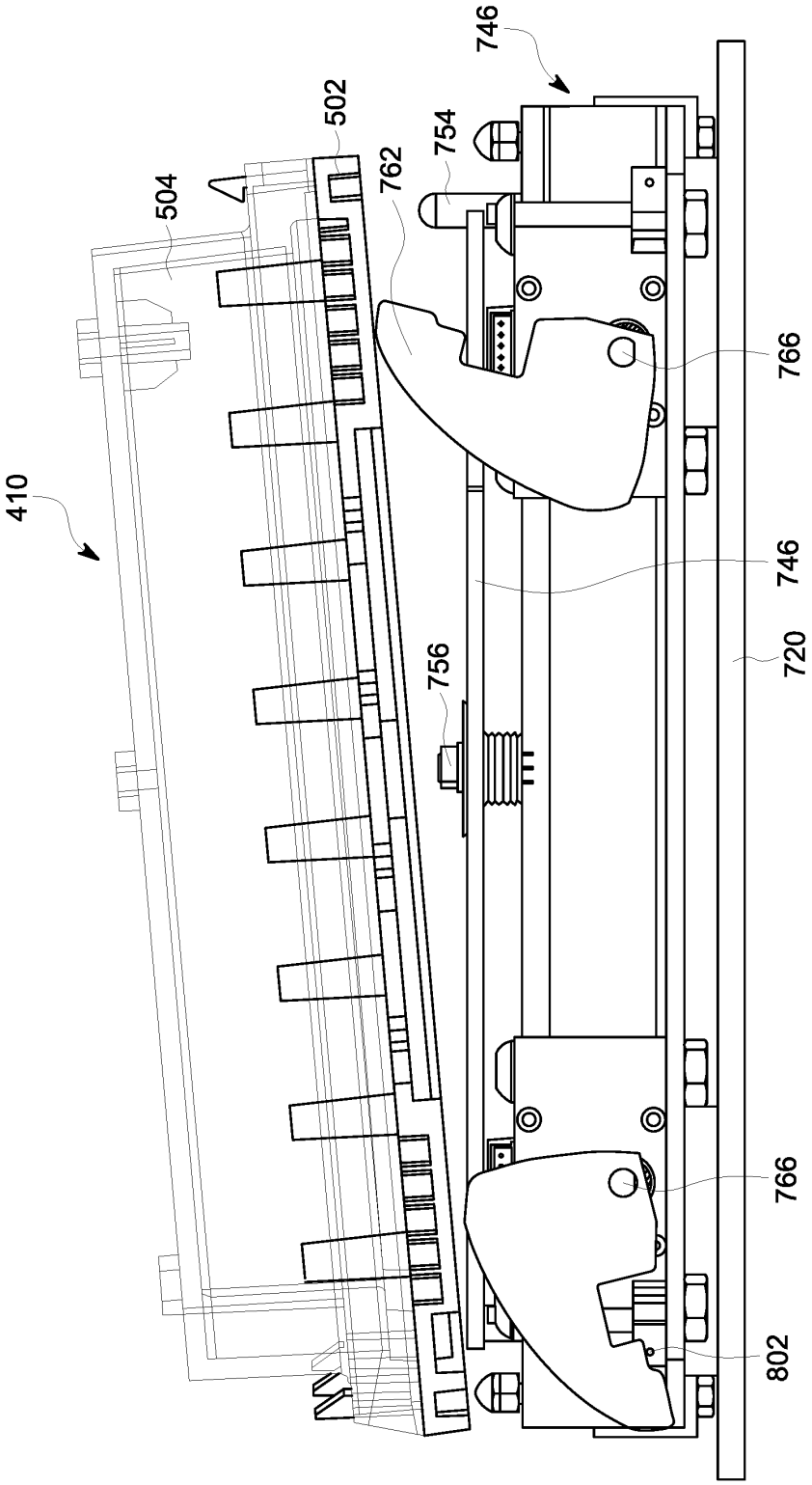

FIG. 42

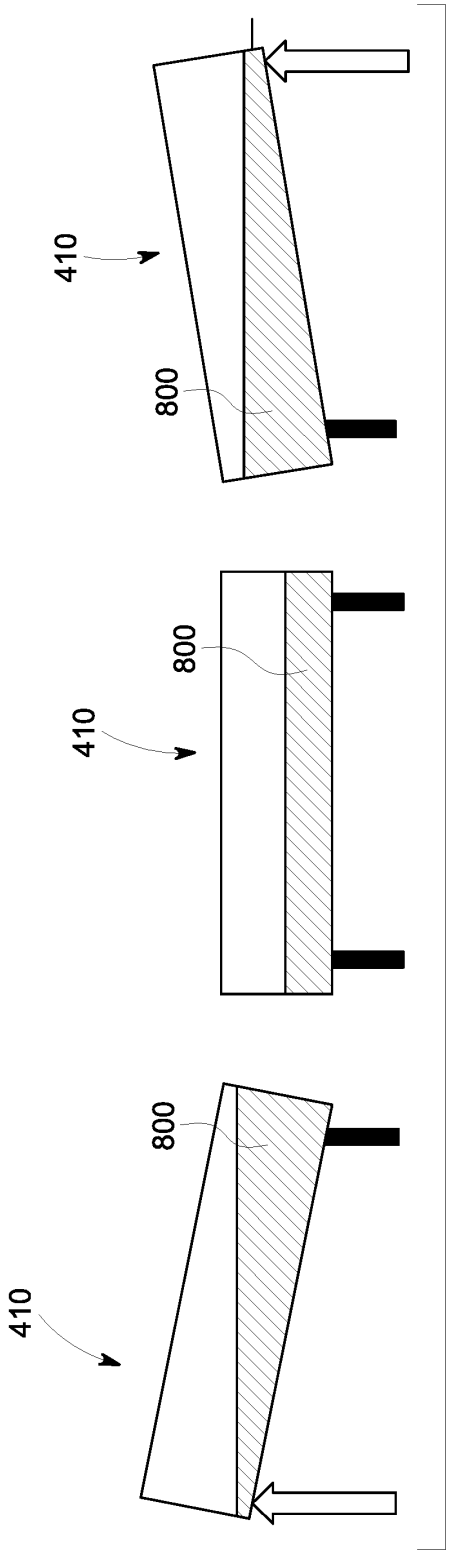

FIG. 43

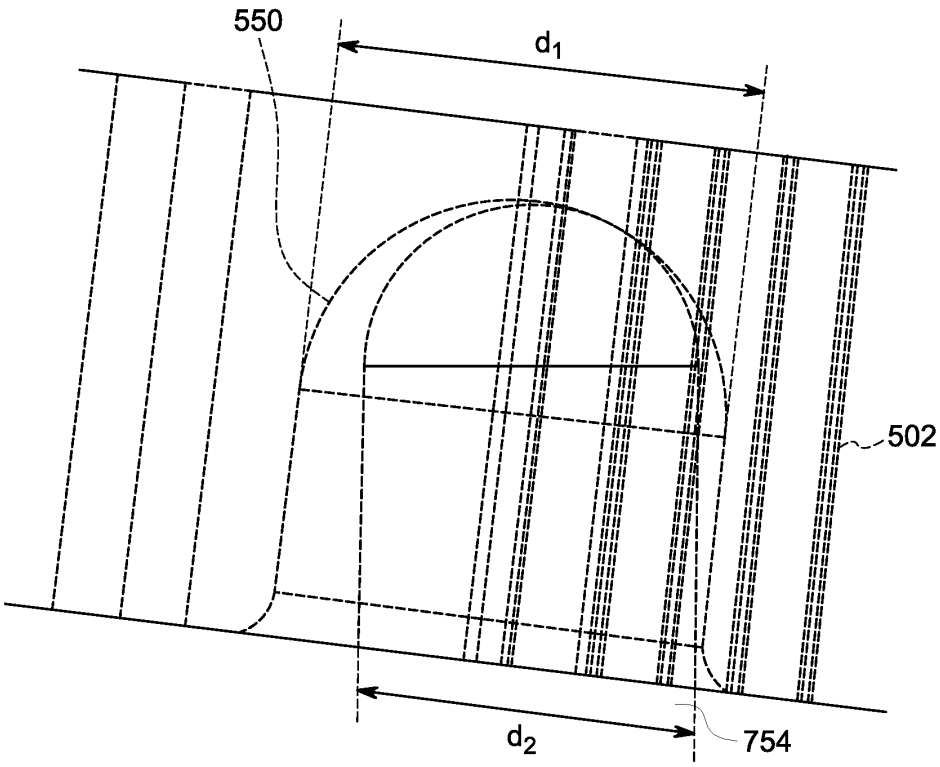

FIG. 44

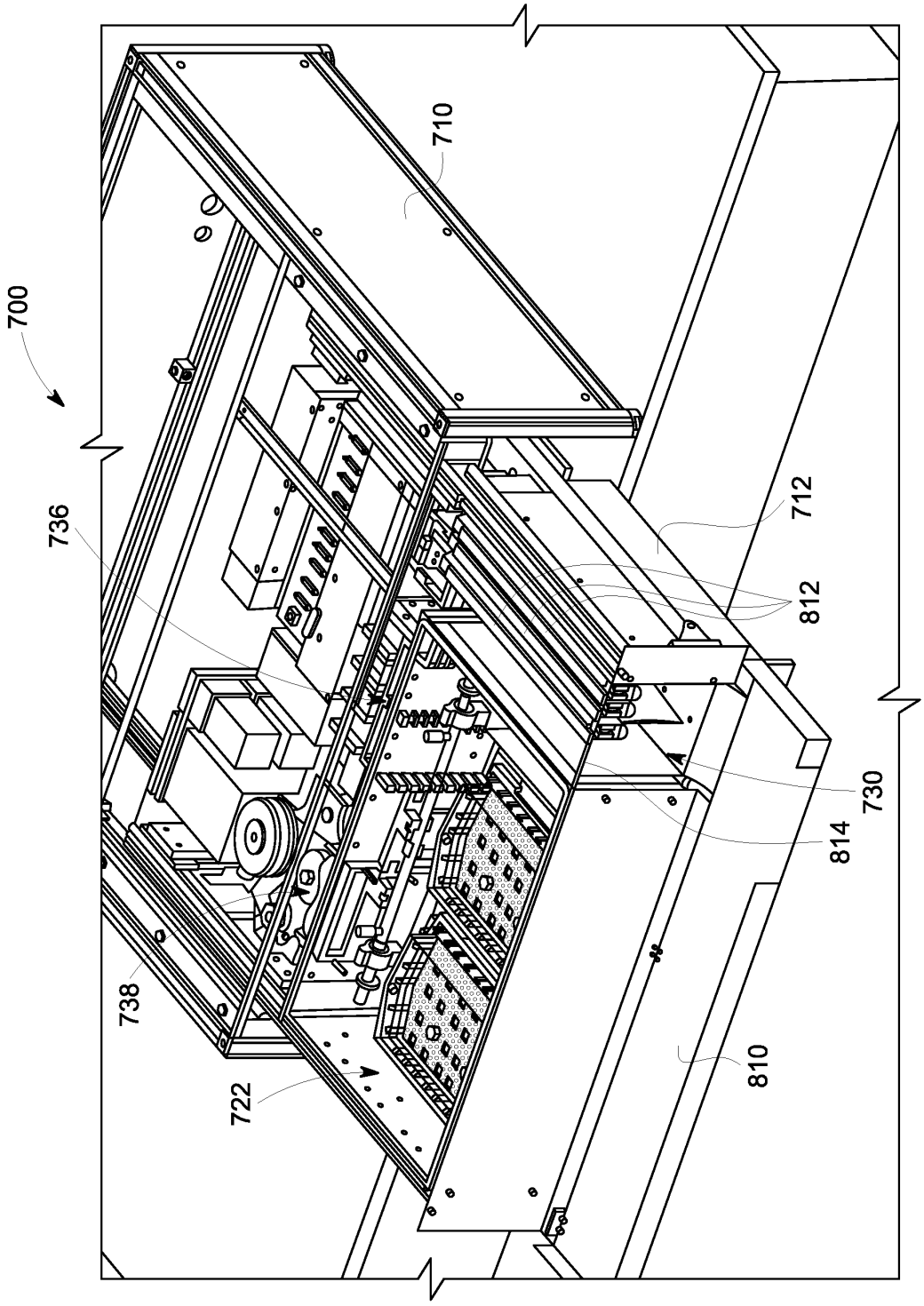

FIG. 45

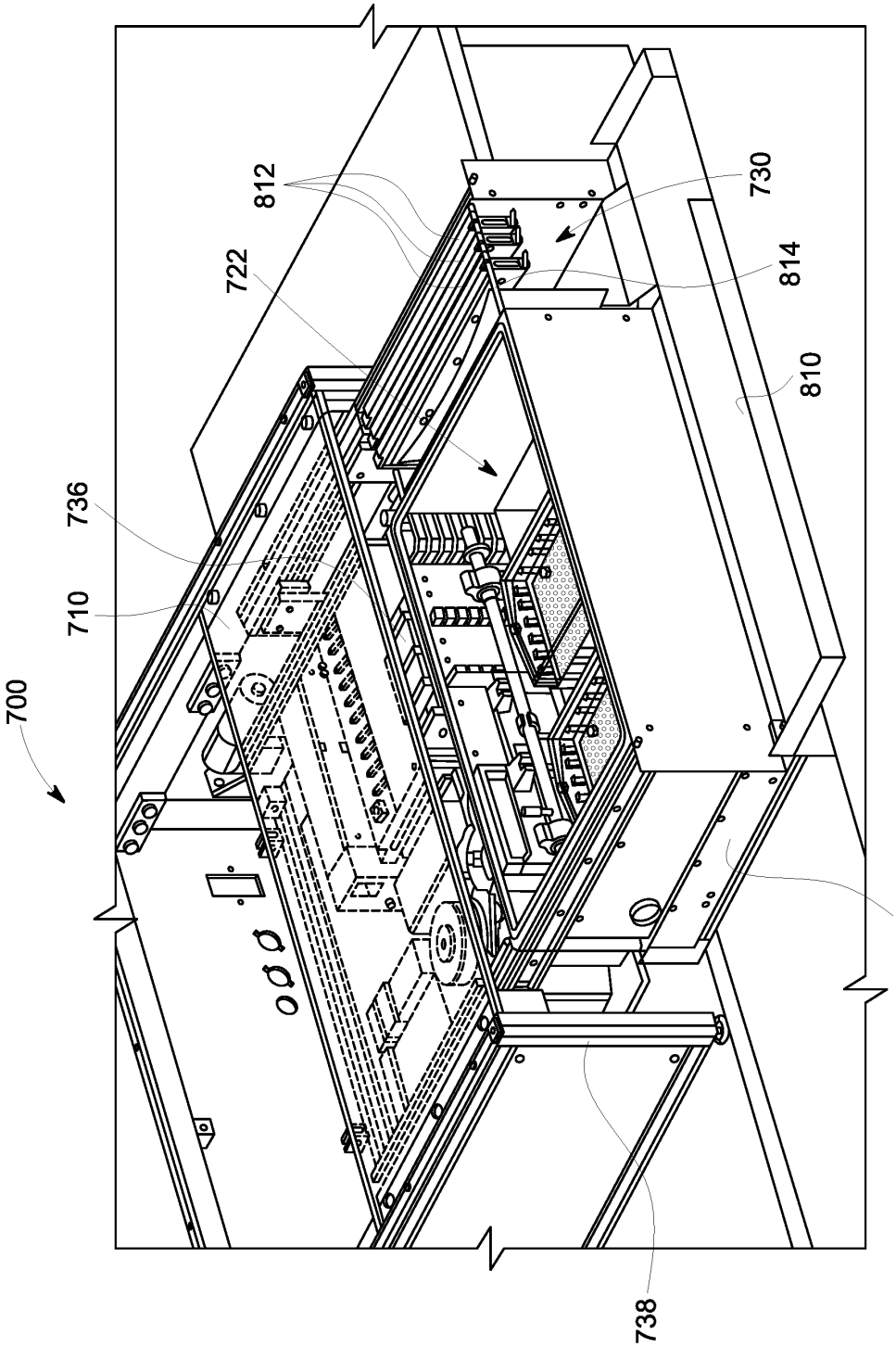

FIG. 46

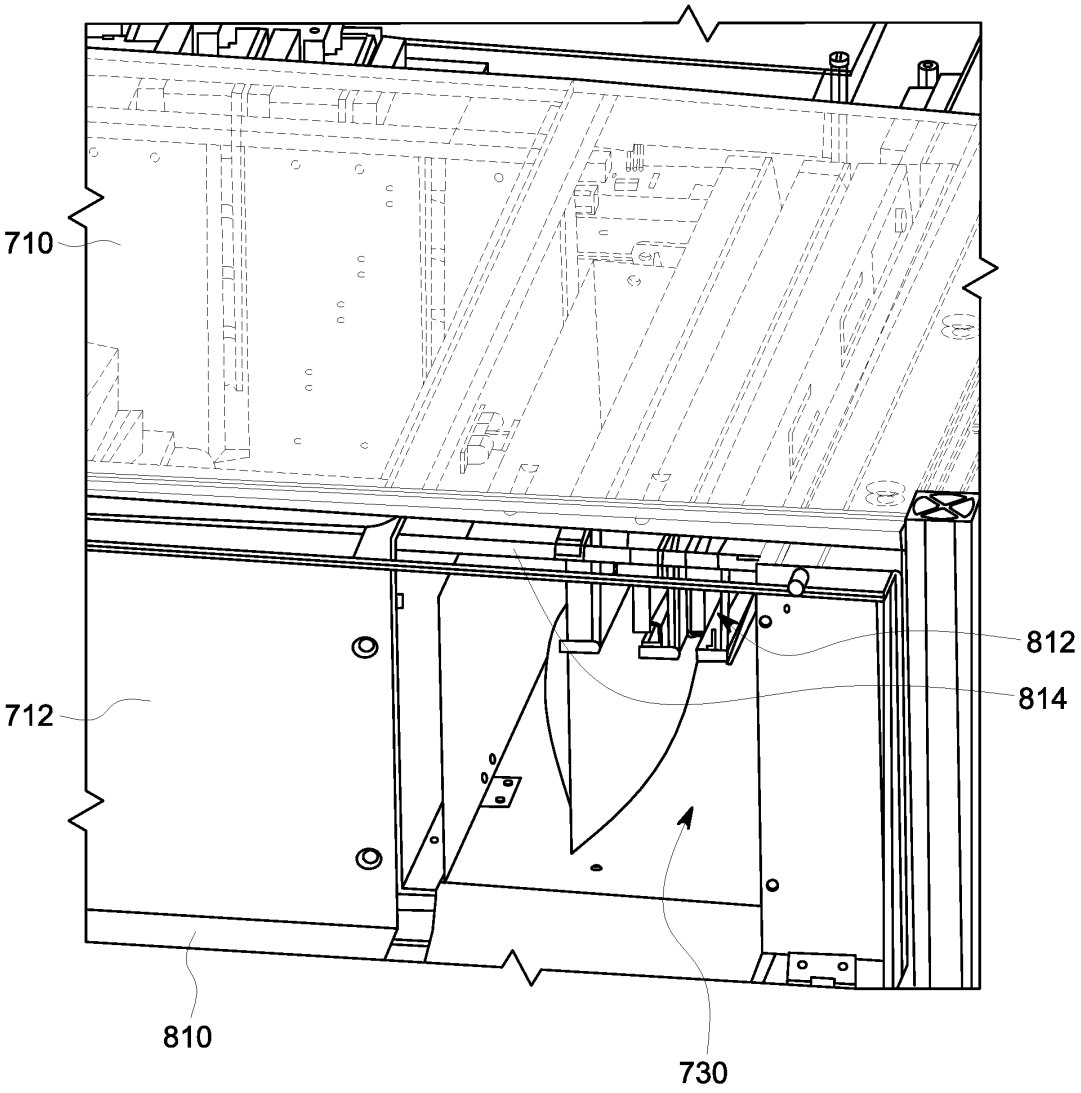

FIG. 47

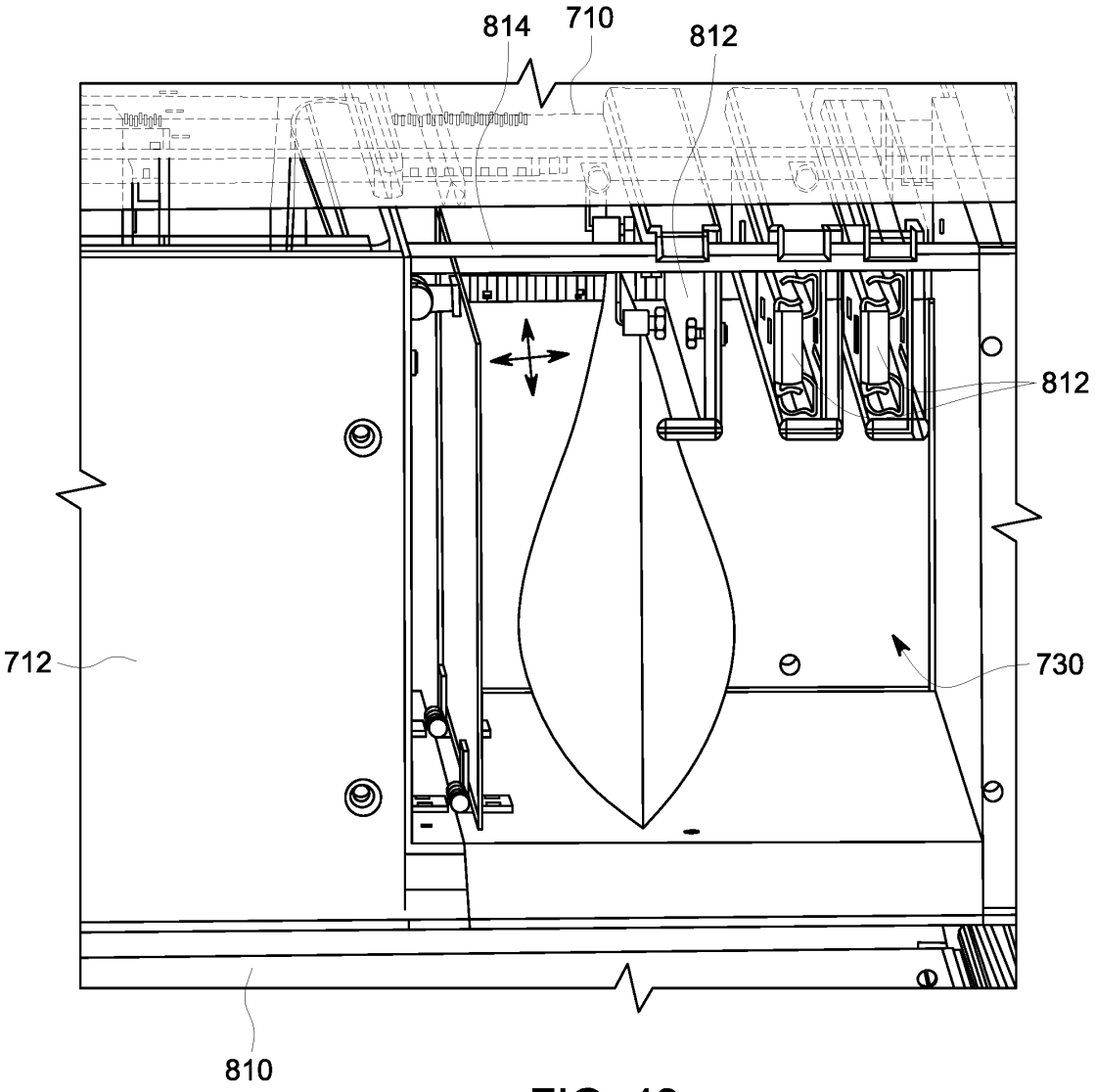

FIG. 48

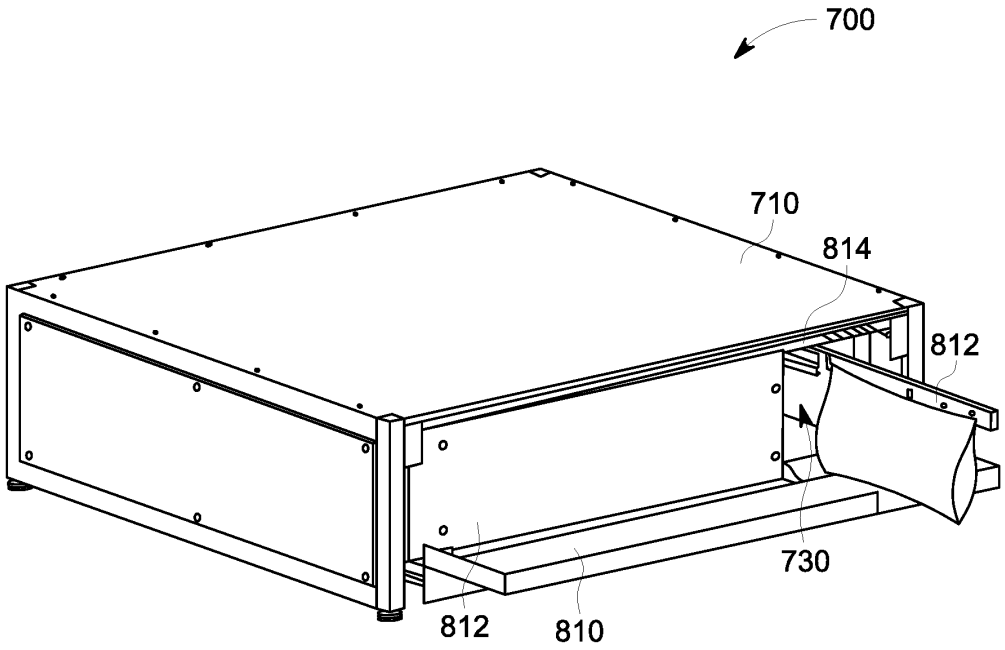

FIG. 49

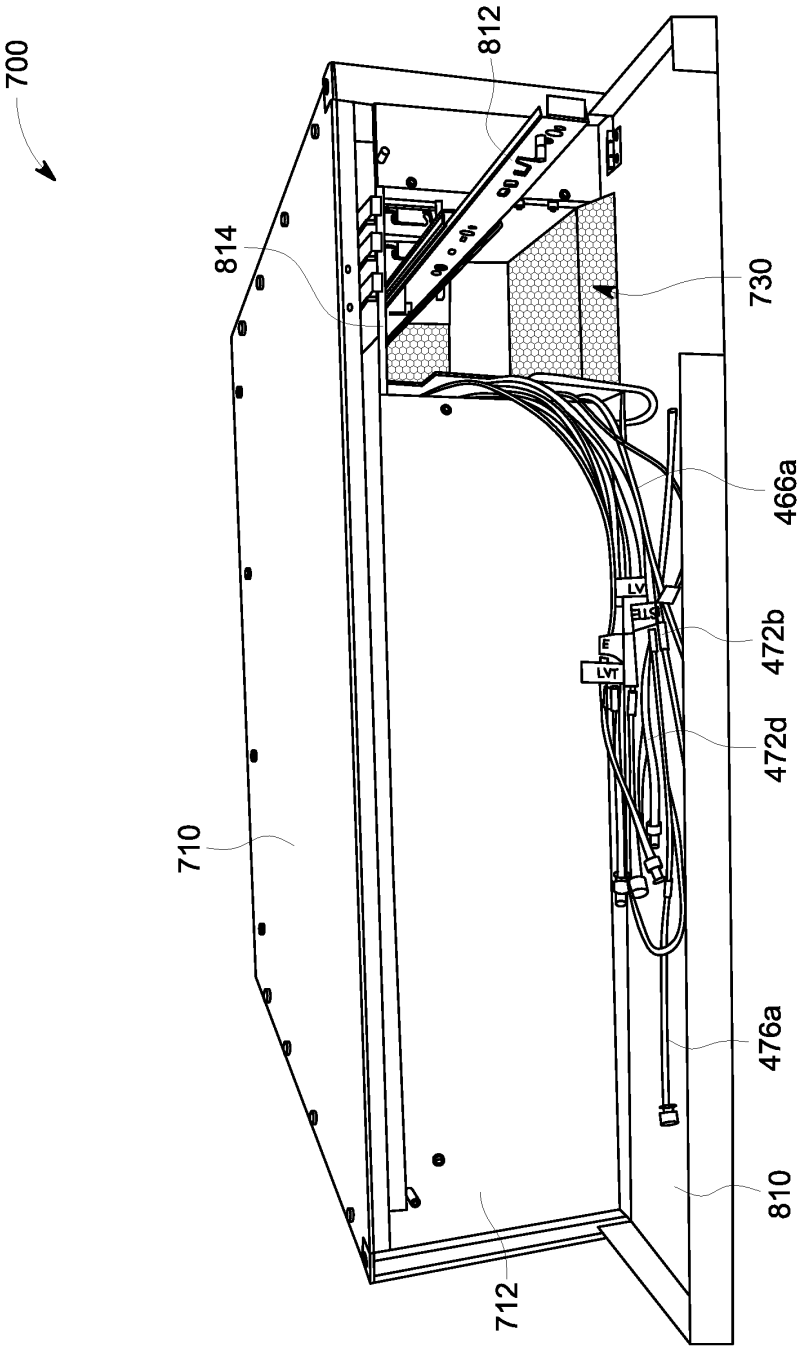

FIG. 50

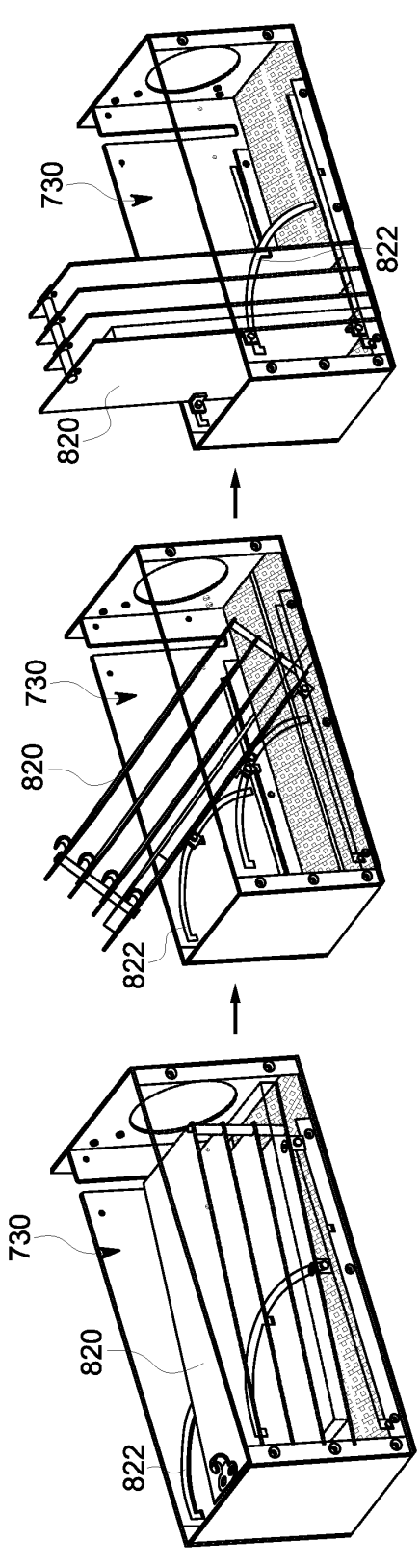

FIG. 51

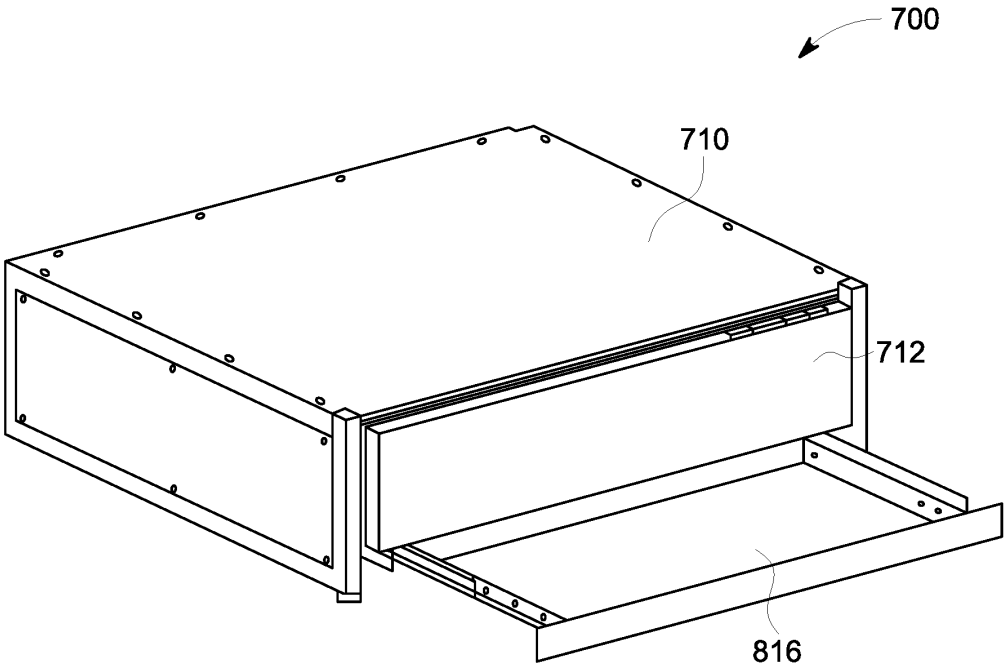

FIG. 52

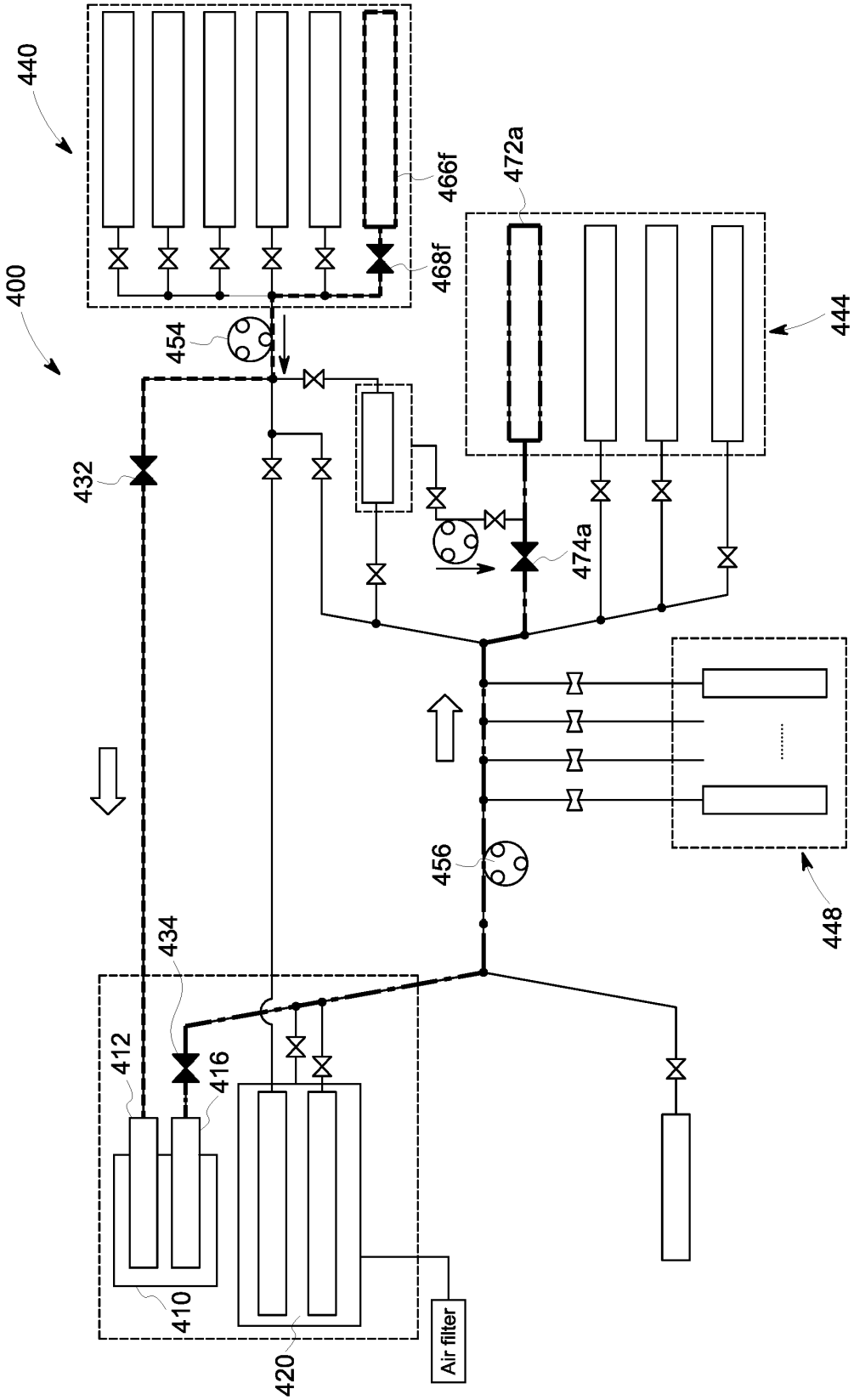
440
466f
472a
468f
400
444
454
432
474a
456
448
434
412
416
410
420
Air filter

FIG. 53

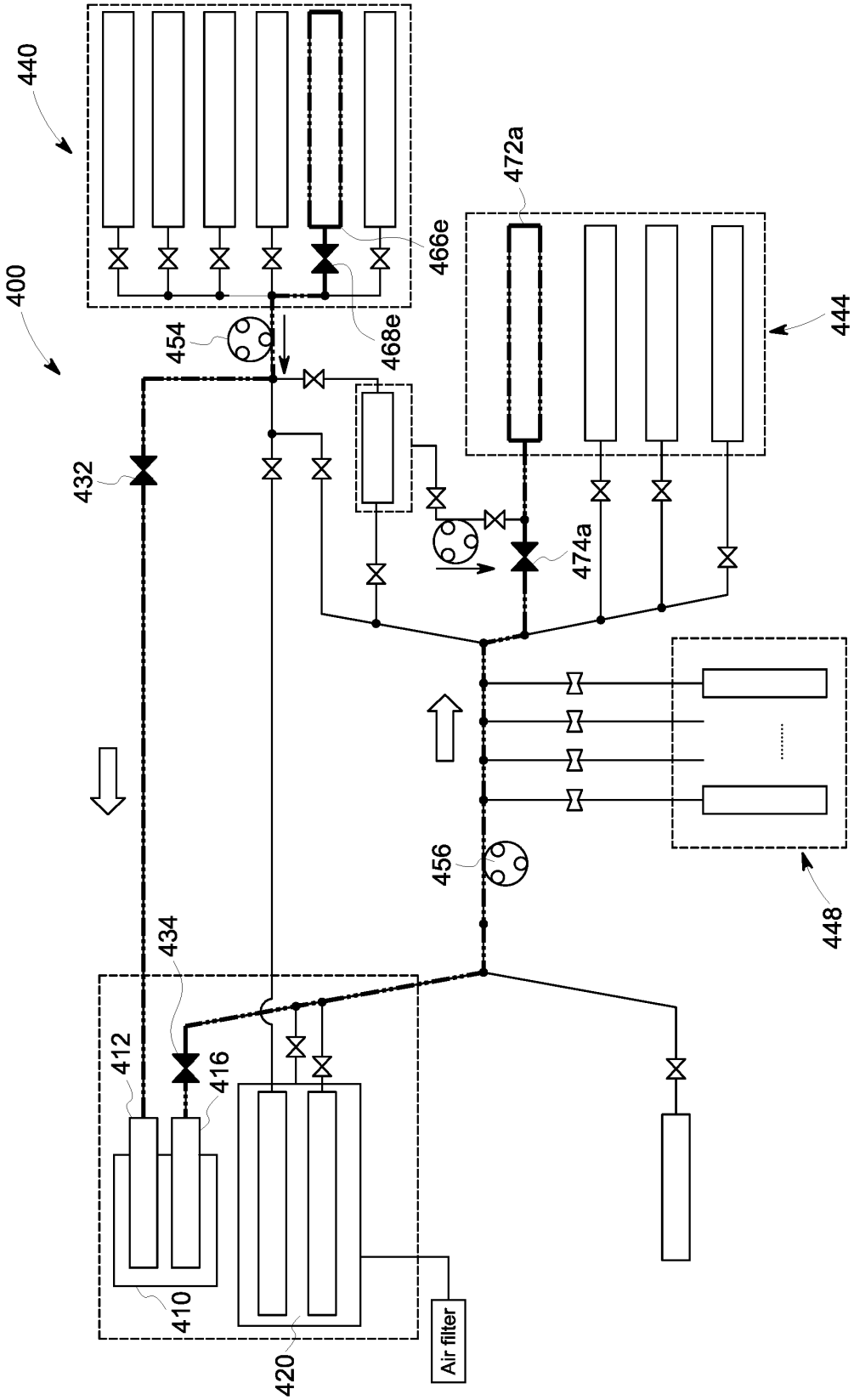
440
400
472a
466e
468e
454
444
432
474a
456
448
434
412
416
410
420
Air filter

FIG. 54

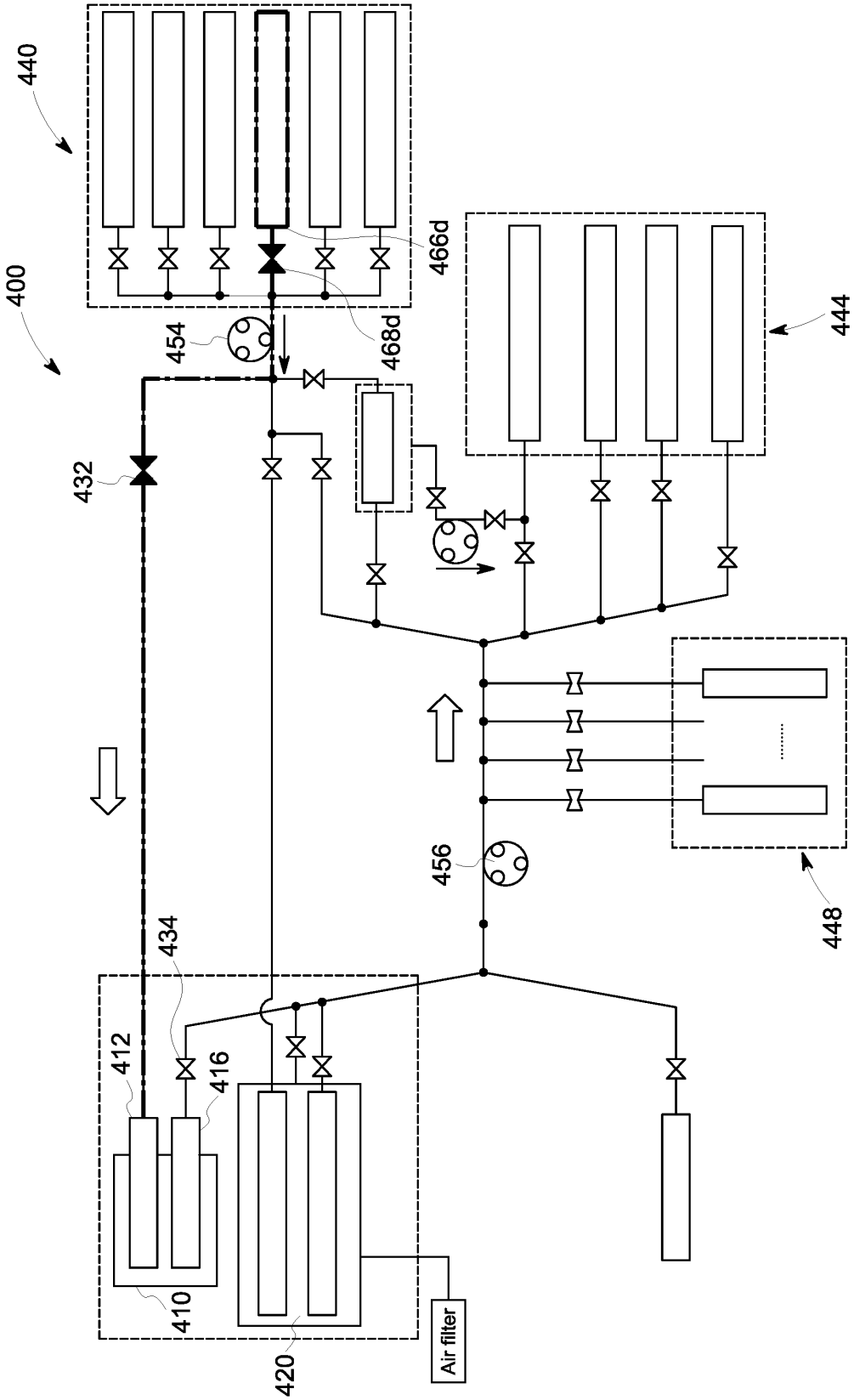
440
400
466d
468d
454
444
432
456
448
434
412
416
410
420
Air filter

FIG. 55

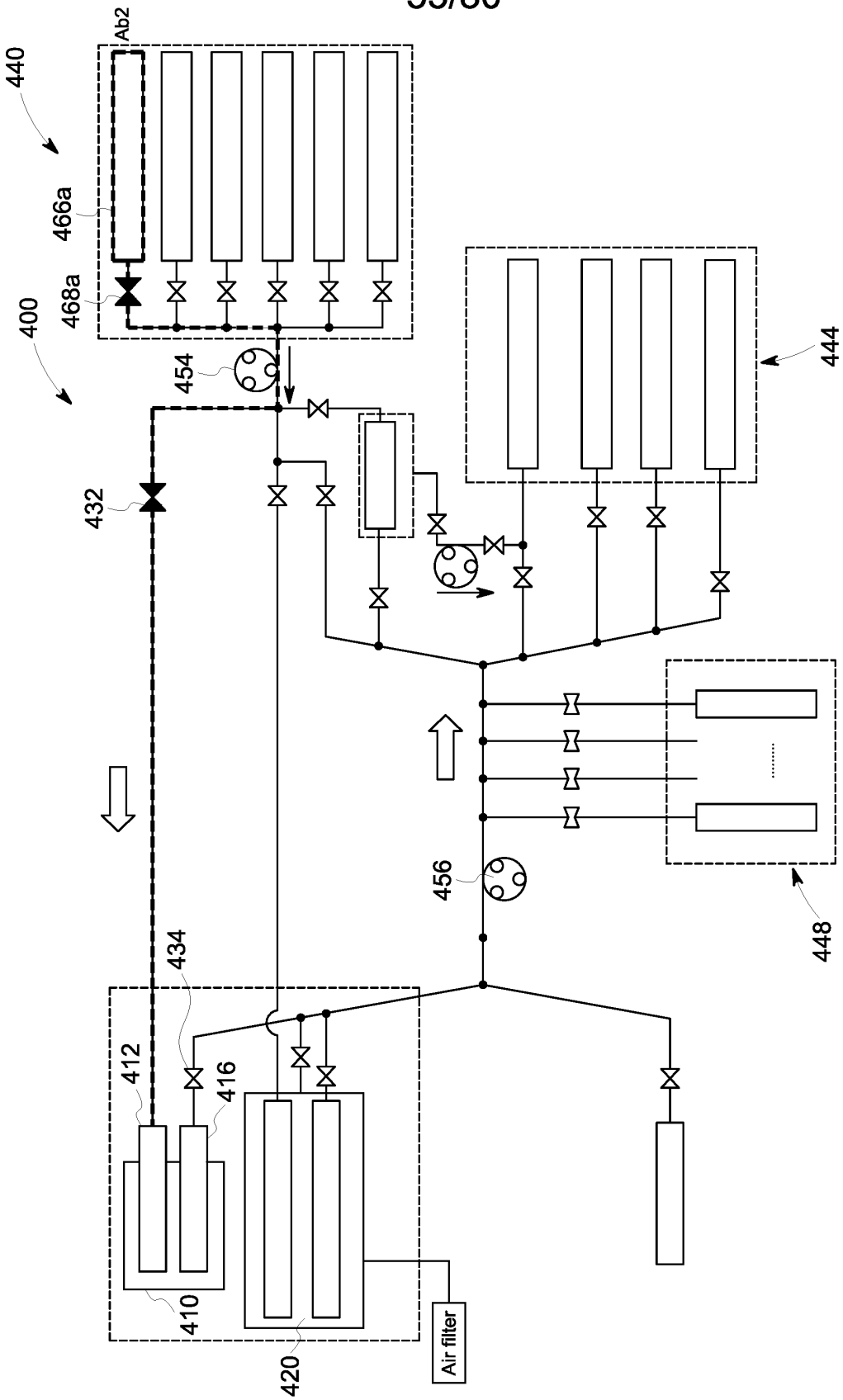
440
Ab2
466a
468a
400
454
444
432
456
448
434
412
416
410
420
Air filter

FIG. 56

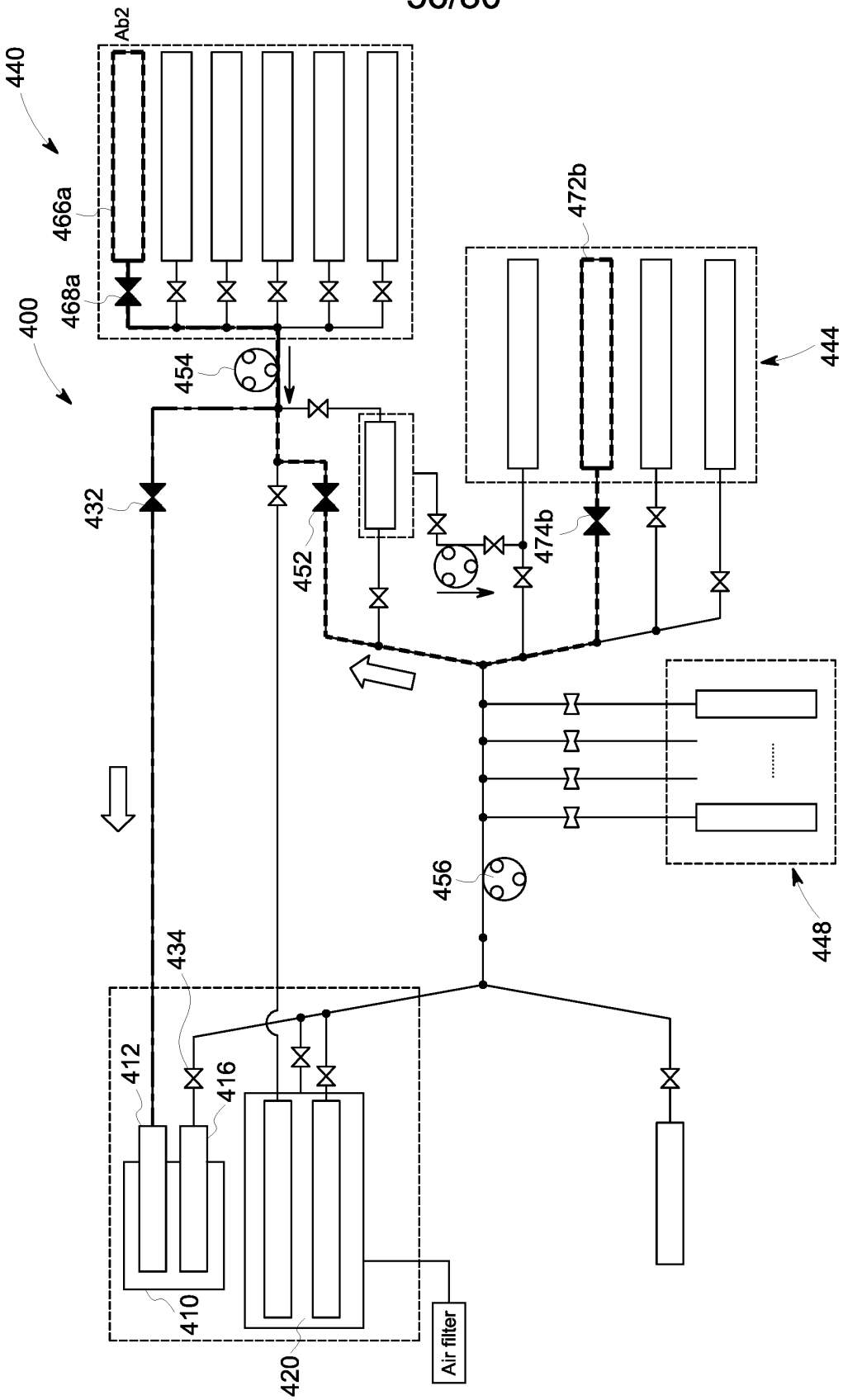
Ab2
440
466a
468a
400
454
472b
444
432
452
474b
456
448
434
412
416
410
420
Air filter

FIG. 57

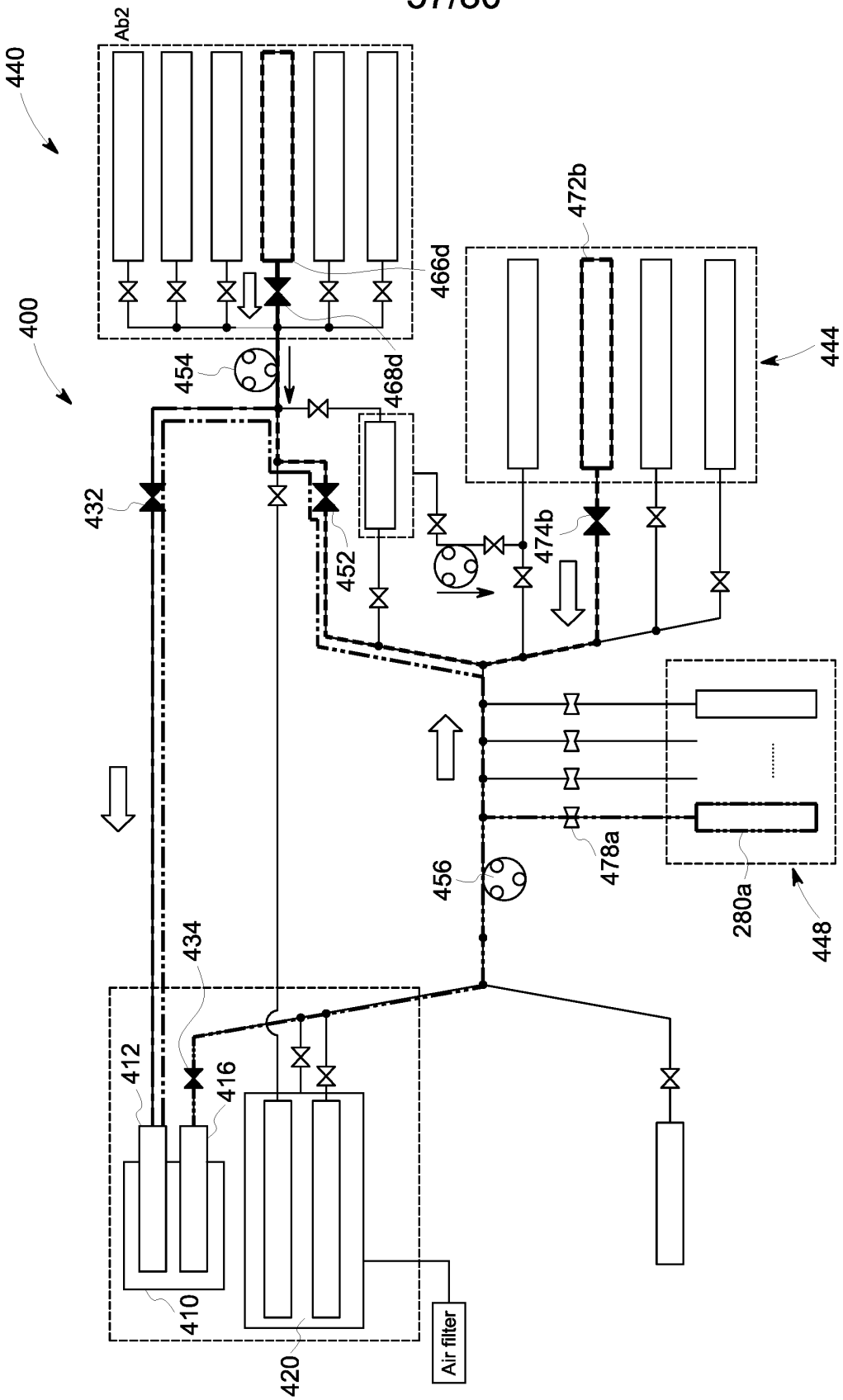
Ab2
440
400
472b
466d
444
454
468d
432
452
474b
478a
456
280a
448
434
412
416
410
420
Air filter

FIG. 58

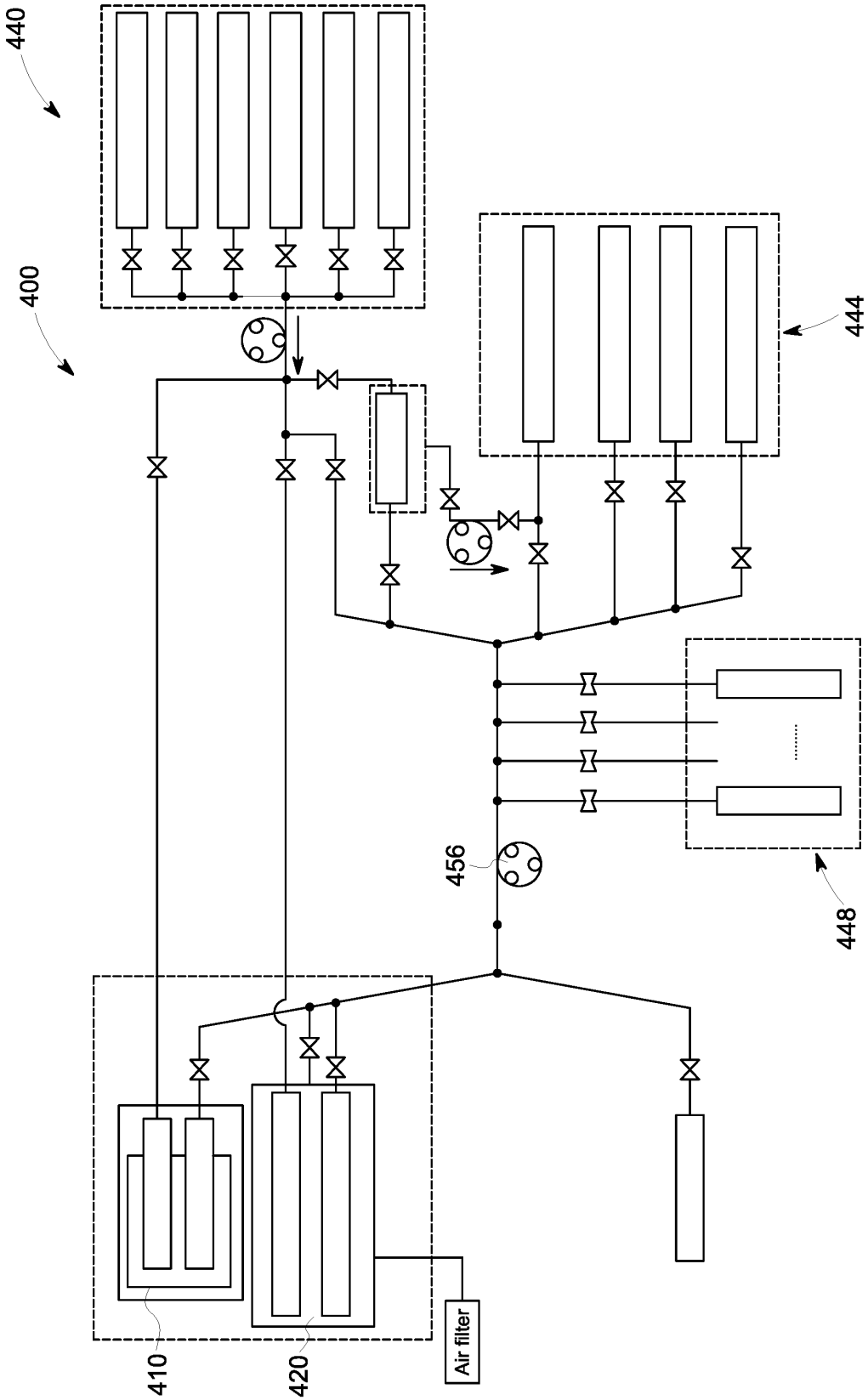

FIG. 59

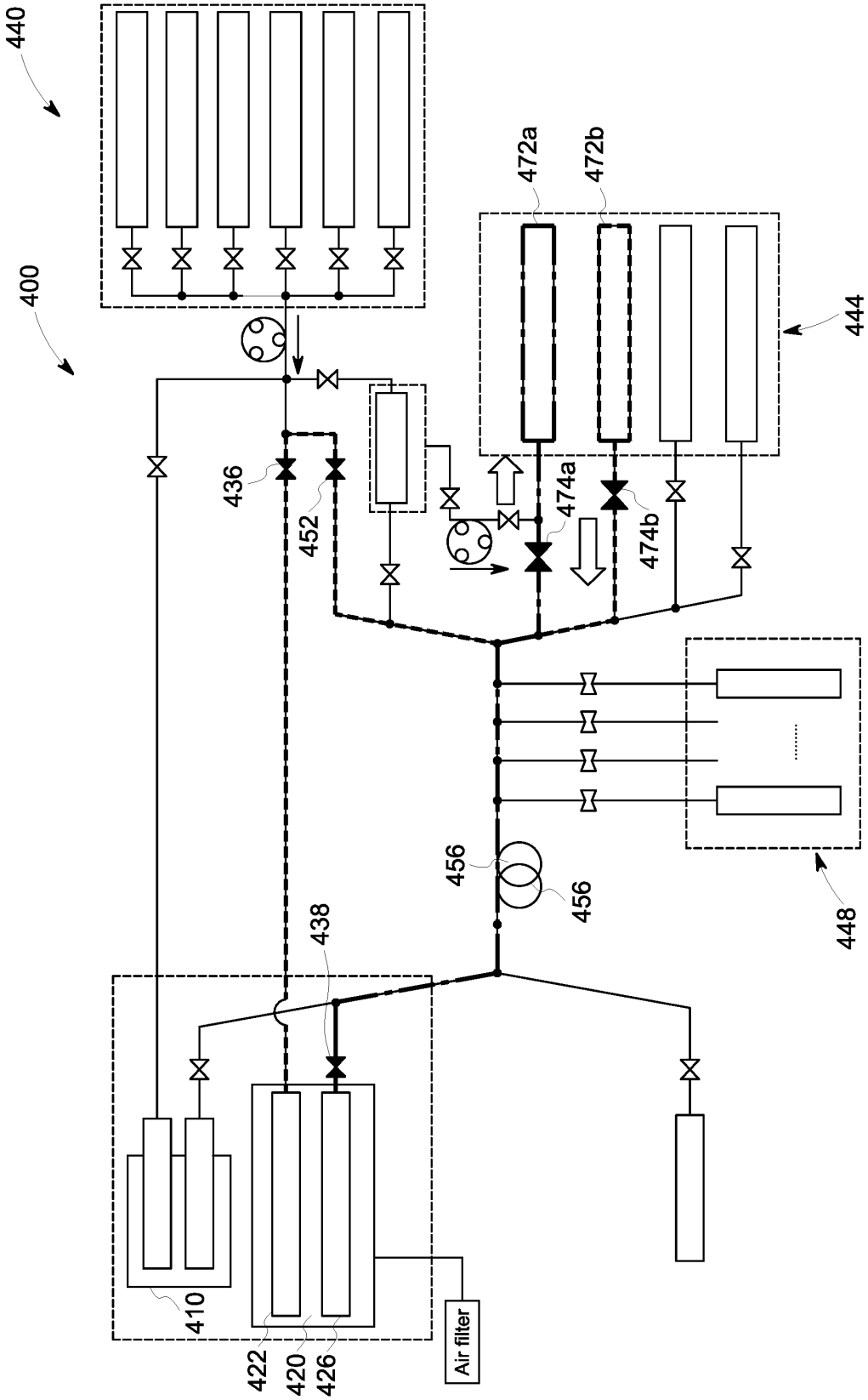
440
400
472a
472b
444
436
452
474a
474b
456
456
448
438
410
422
420
426
Air filter

FIG. 60

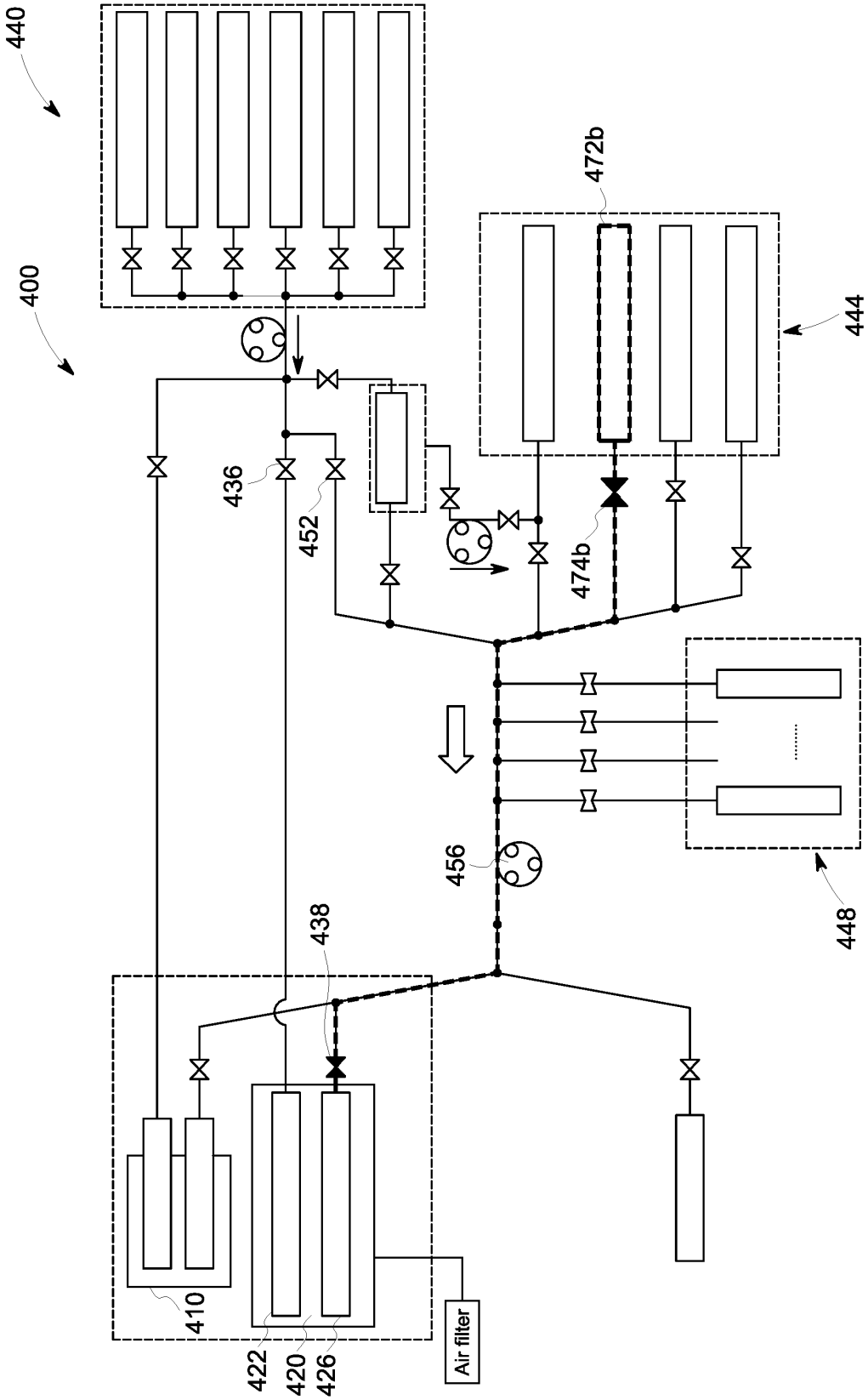
440
400
472b
444
436
452
474b
456
448
438
410
422
420
426
Air filter

FIG. 61

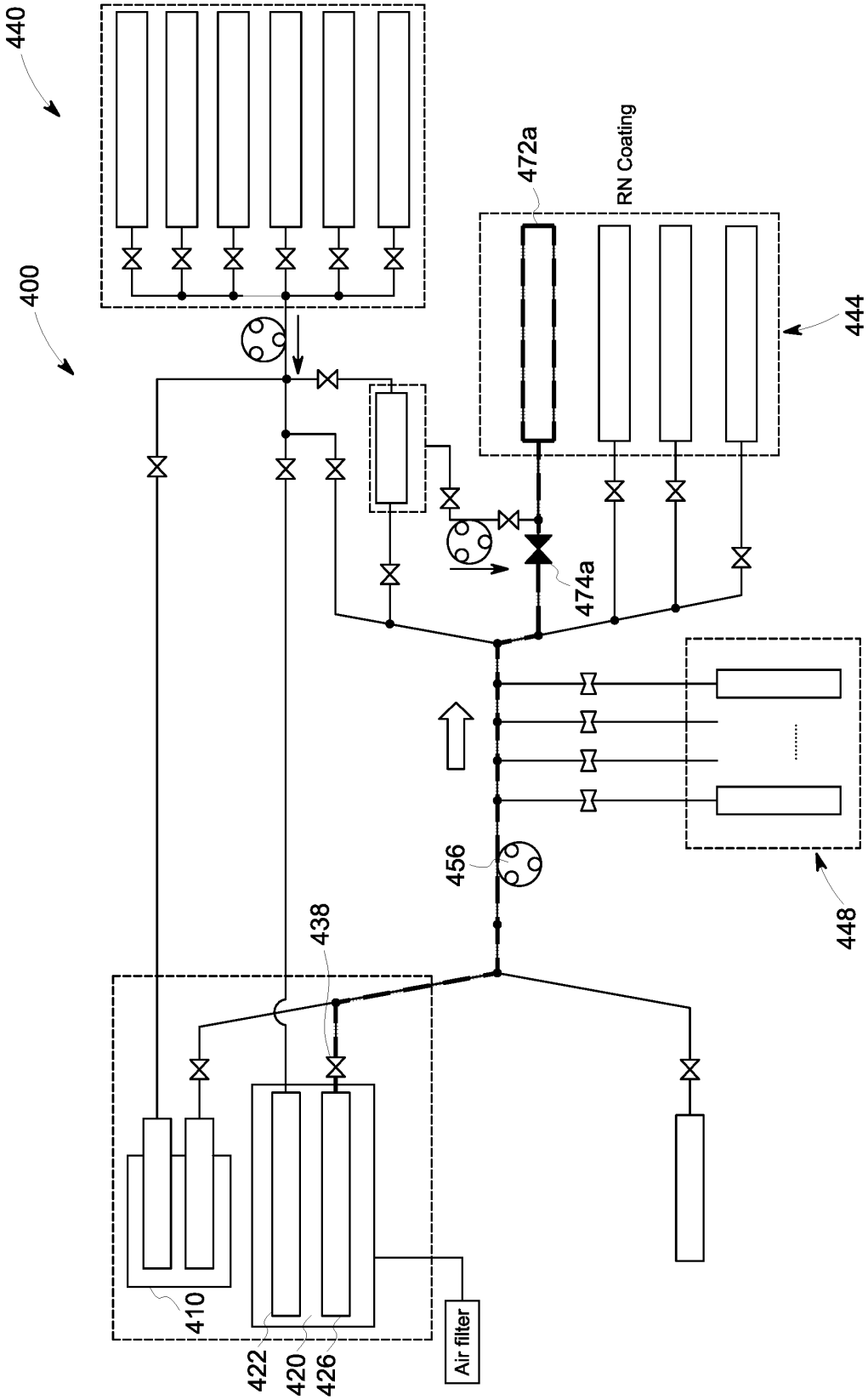
440
400
472a
RN Coating
444
474a
456
448
438
410
422
420
426
Air filter

FIG. 62

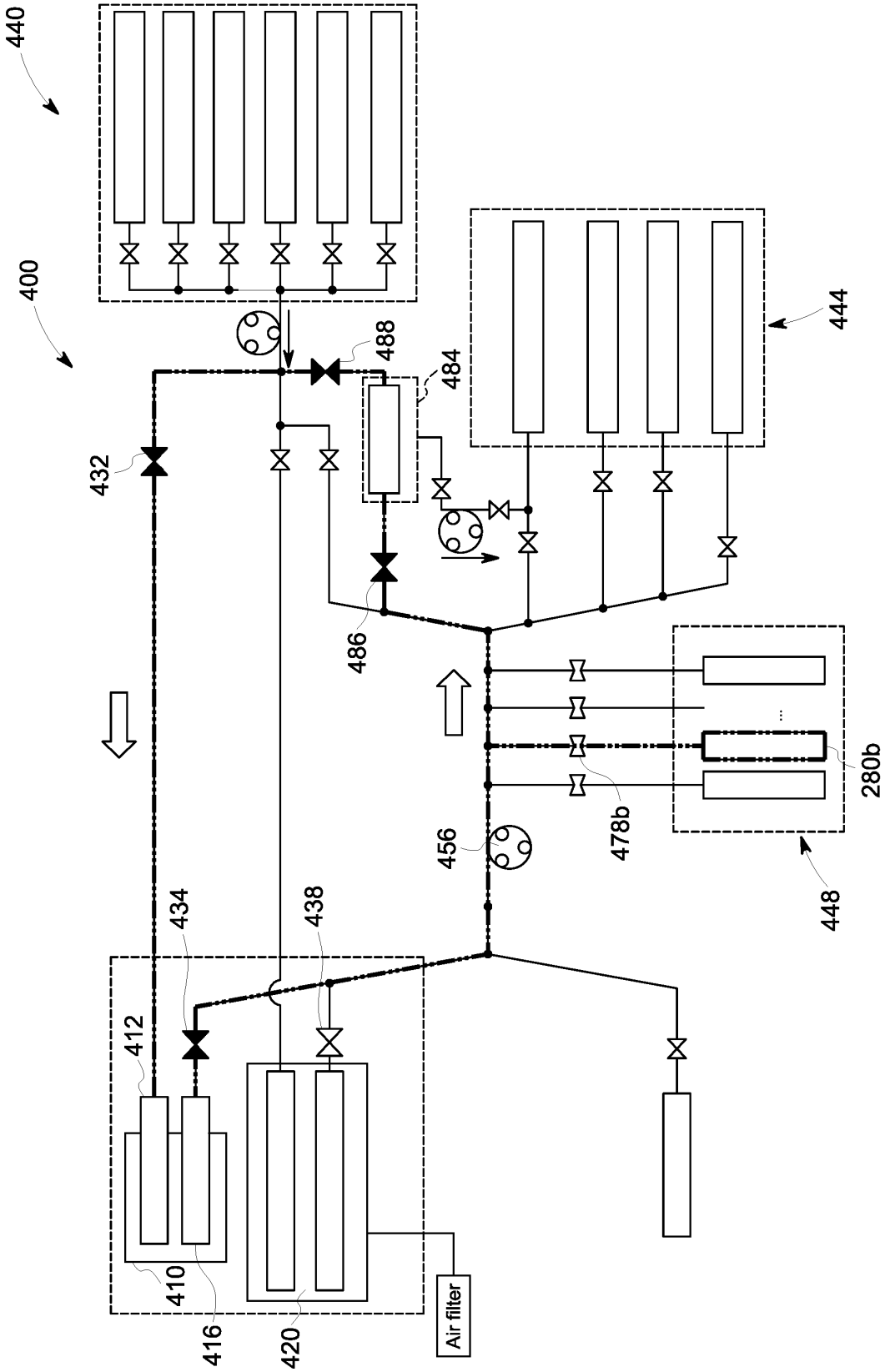
440
400
444
488
484
432
486
280b
478b
456
448
434
438
412
410
416
420
Air filter

FIG. 63

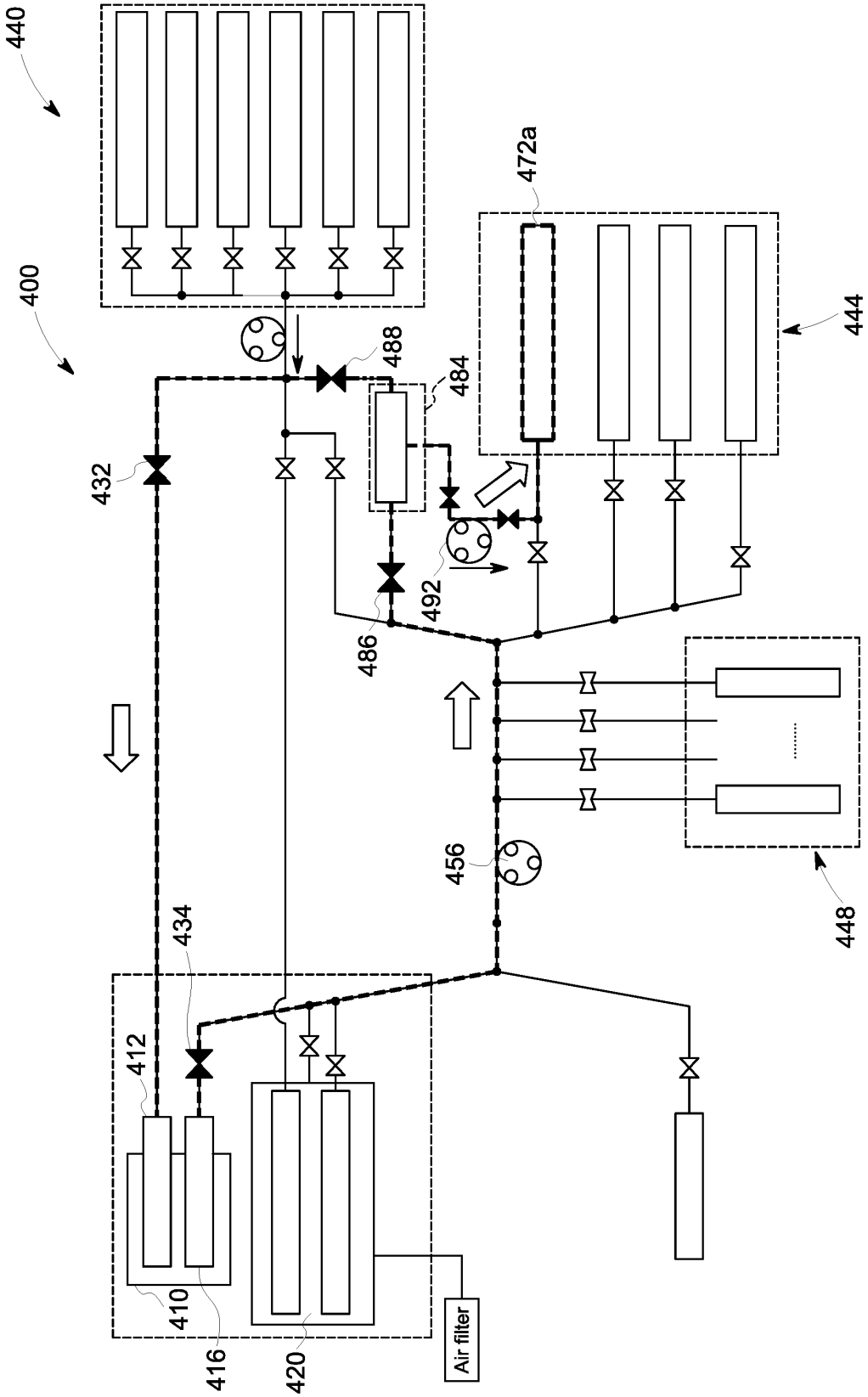
440
400
472a
444
488
484
432
492
486
456
448
434
412
410
416
420
Air filter

FIG. 64

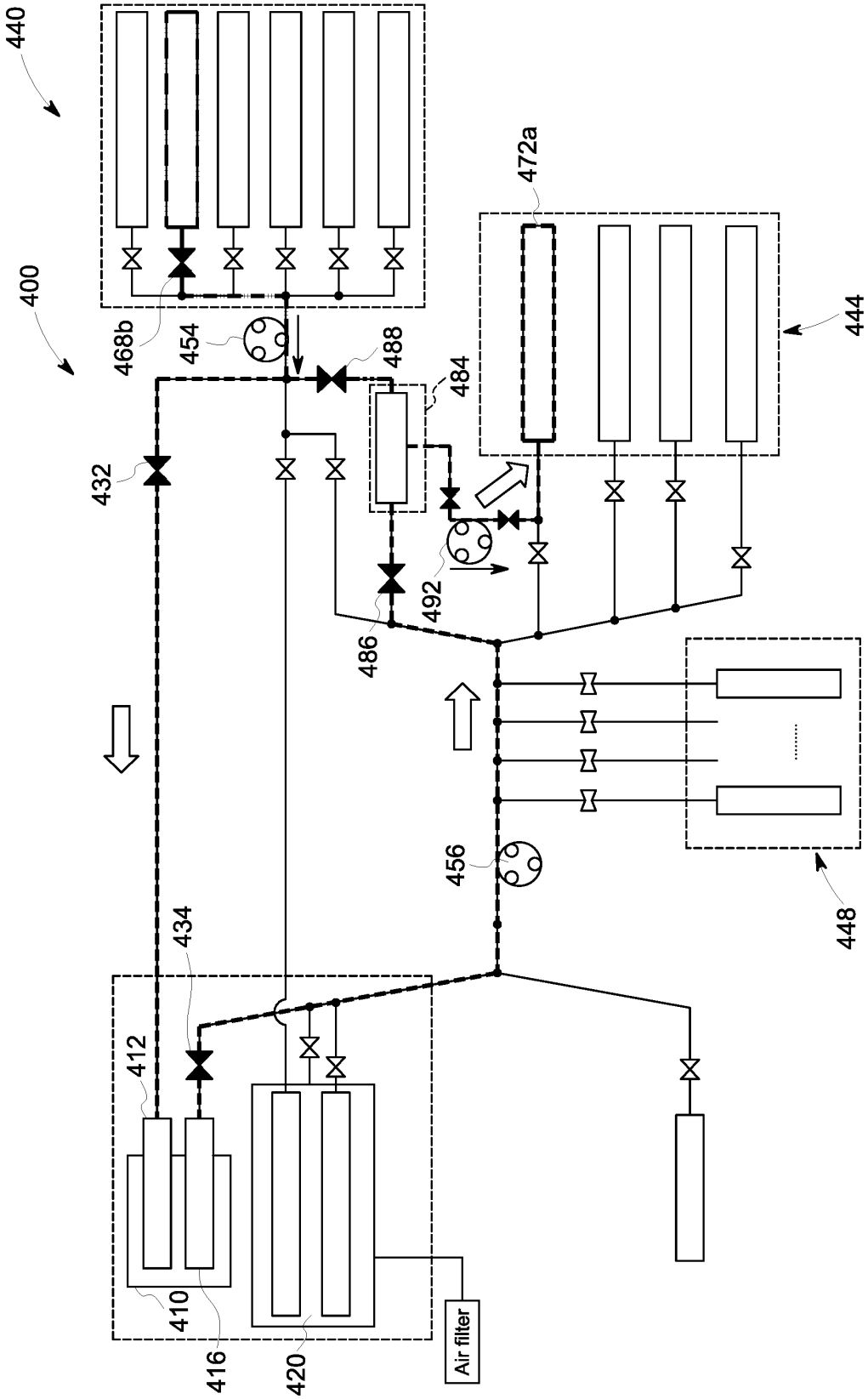
440
400
472a
444
468b
454
488
484
432
492
486
456
448
434
412
410
416
420
Air filter

FIG. 65

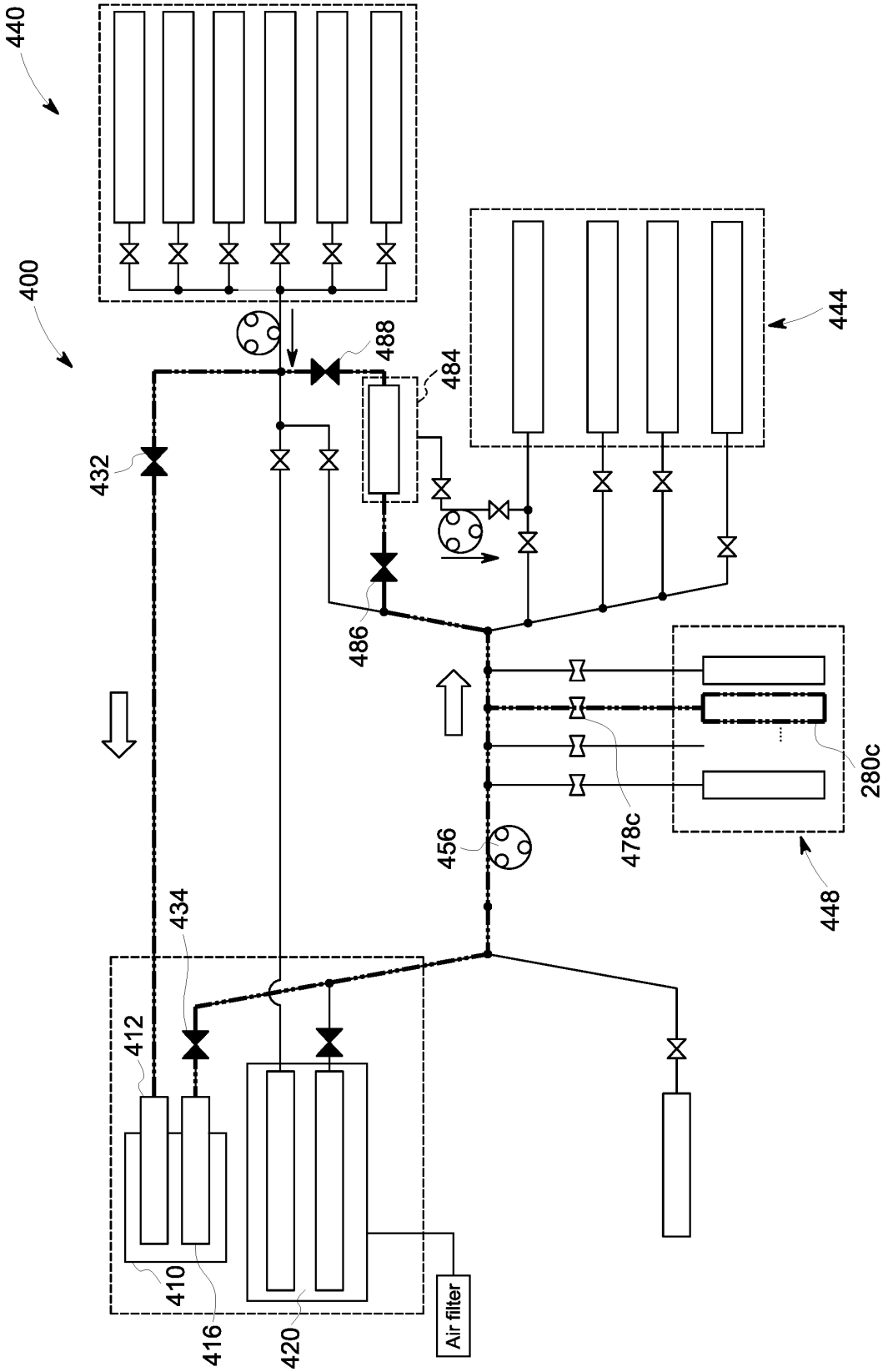
440
400
444
488
484
432
486
280c
478c
456
448
434
412
410
416
420
Air filter

FIG. 66

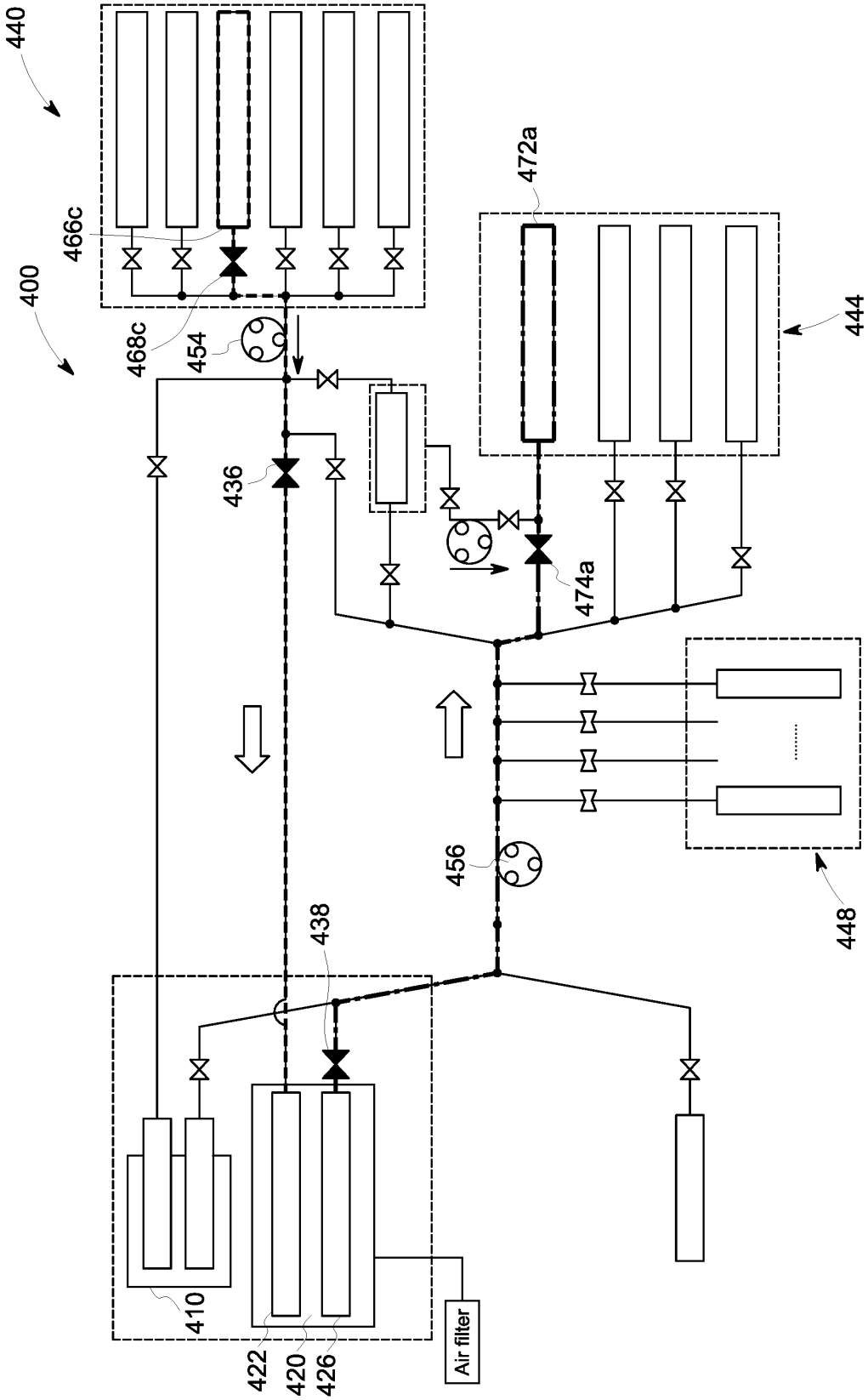
440
400
466c
468c
454
472a
444
436
474a
456
448
438
410
422
420
426
Air filter

FIG. 67

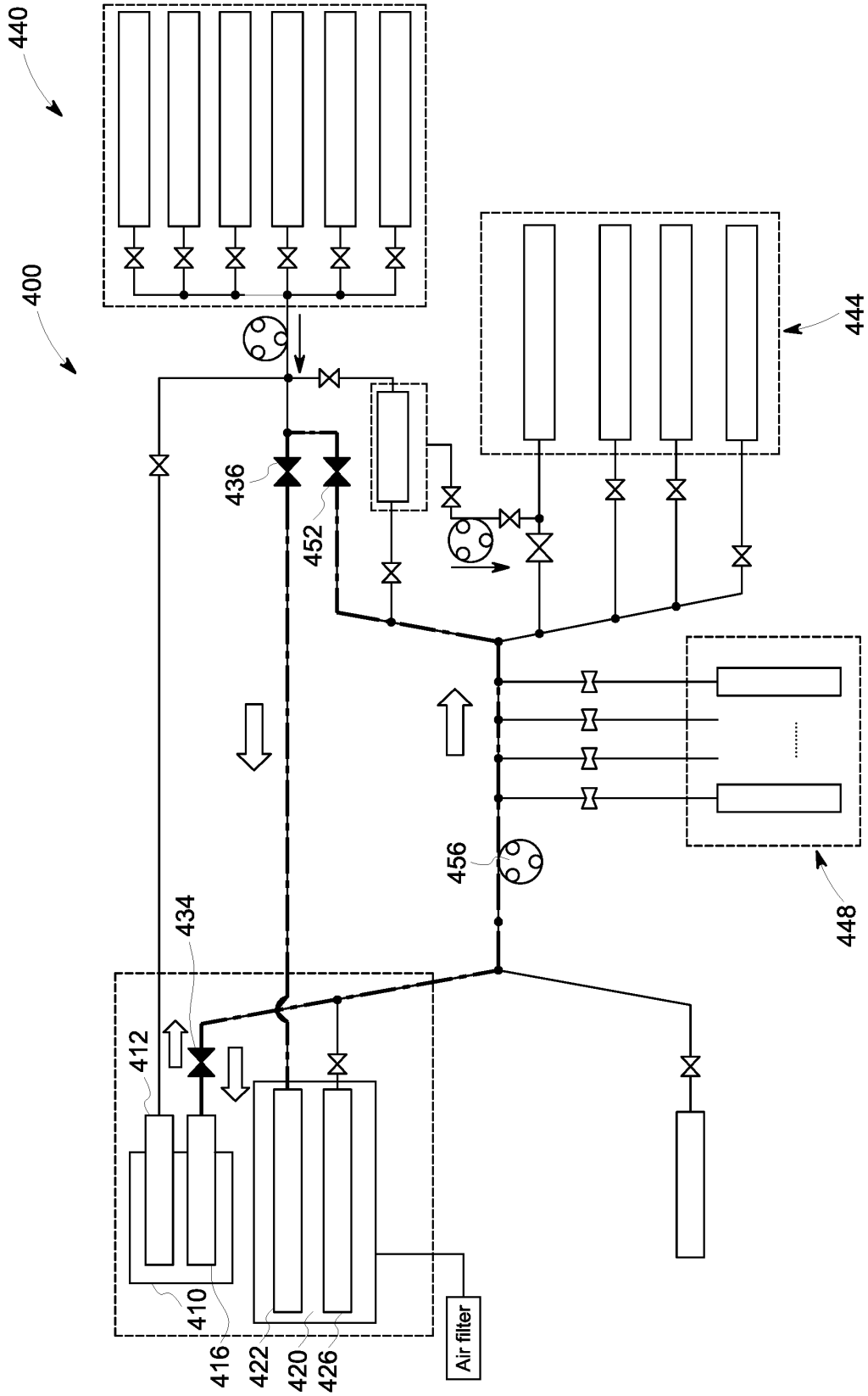
440
400
444
436
452
456
448
434
412
410
416
422
420
426
Air filter

FIG. 68

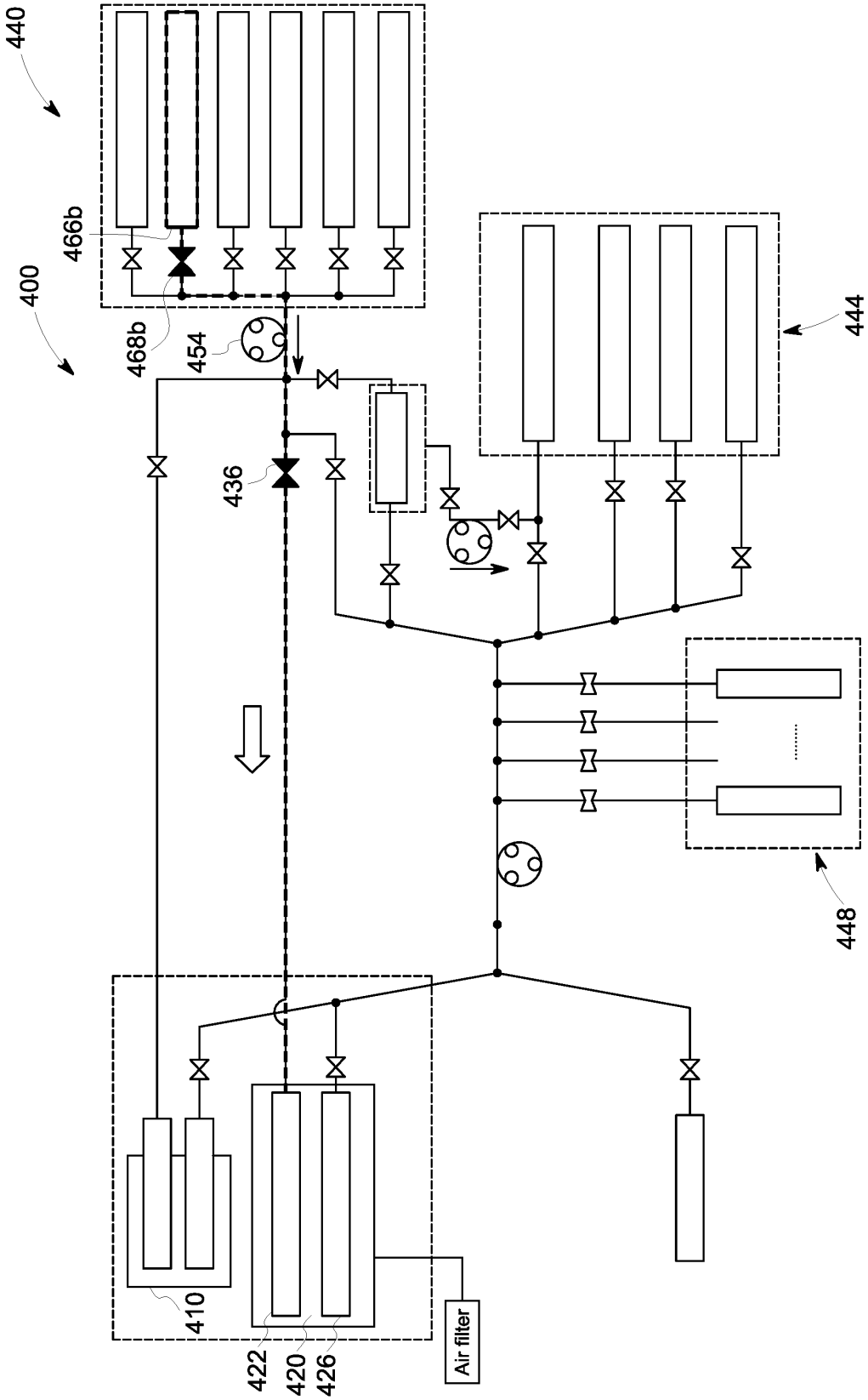

FIG. 69

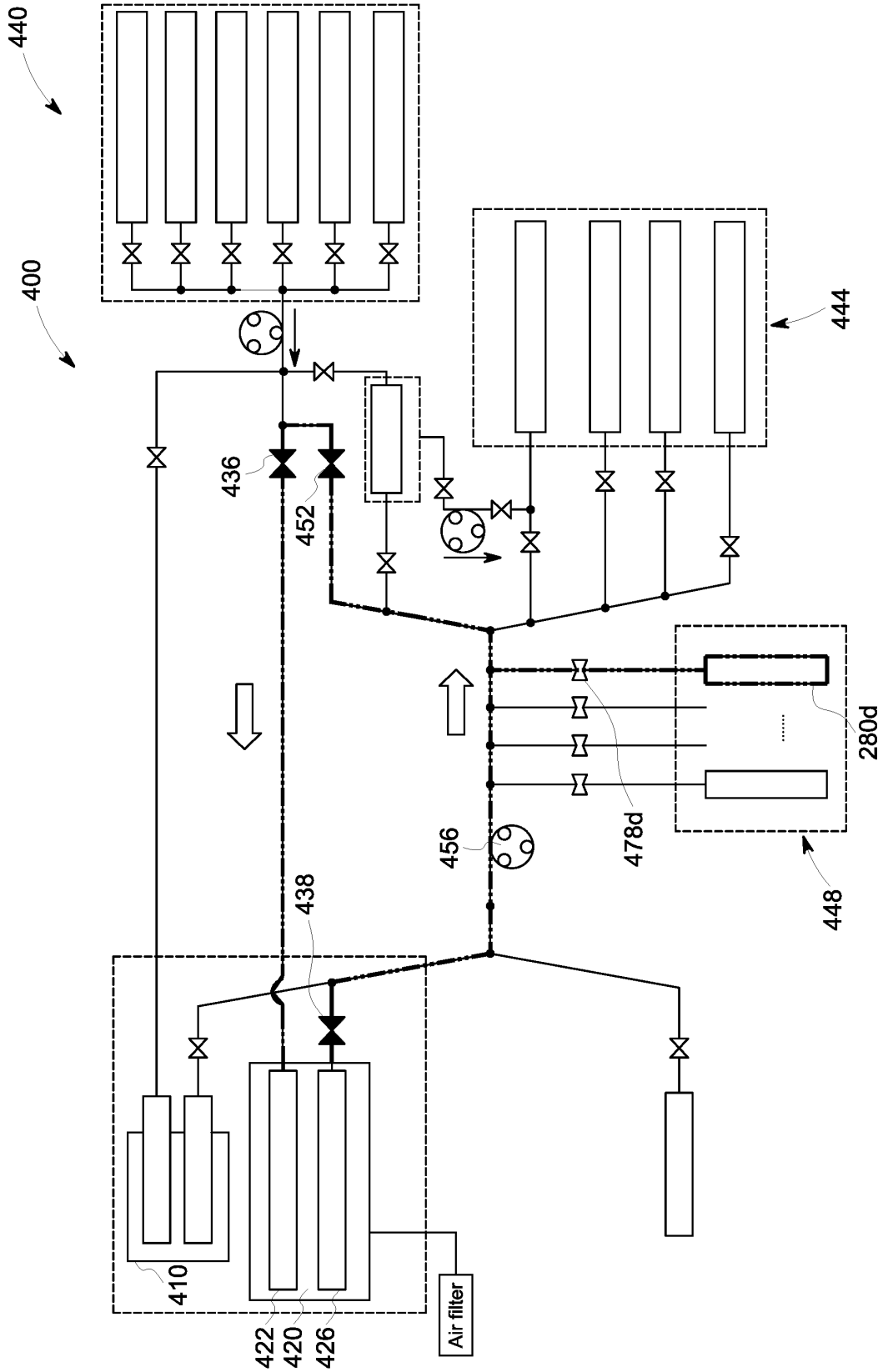
440
400
444
436
452
280d
478d
456
448
438
410
422
420
426
Air filter

FIG. 70

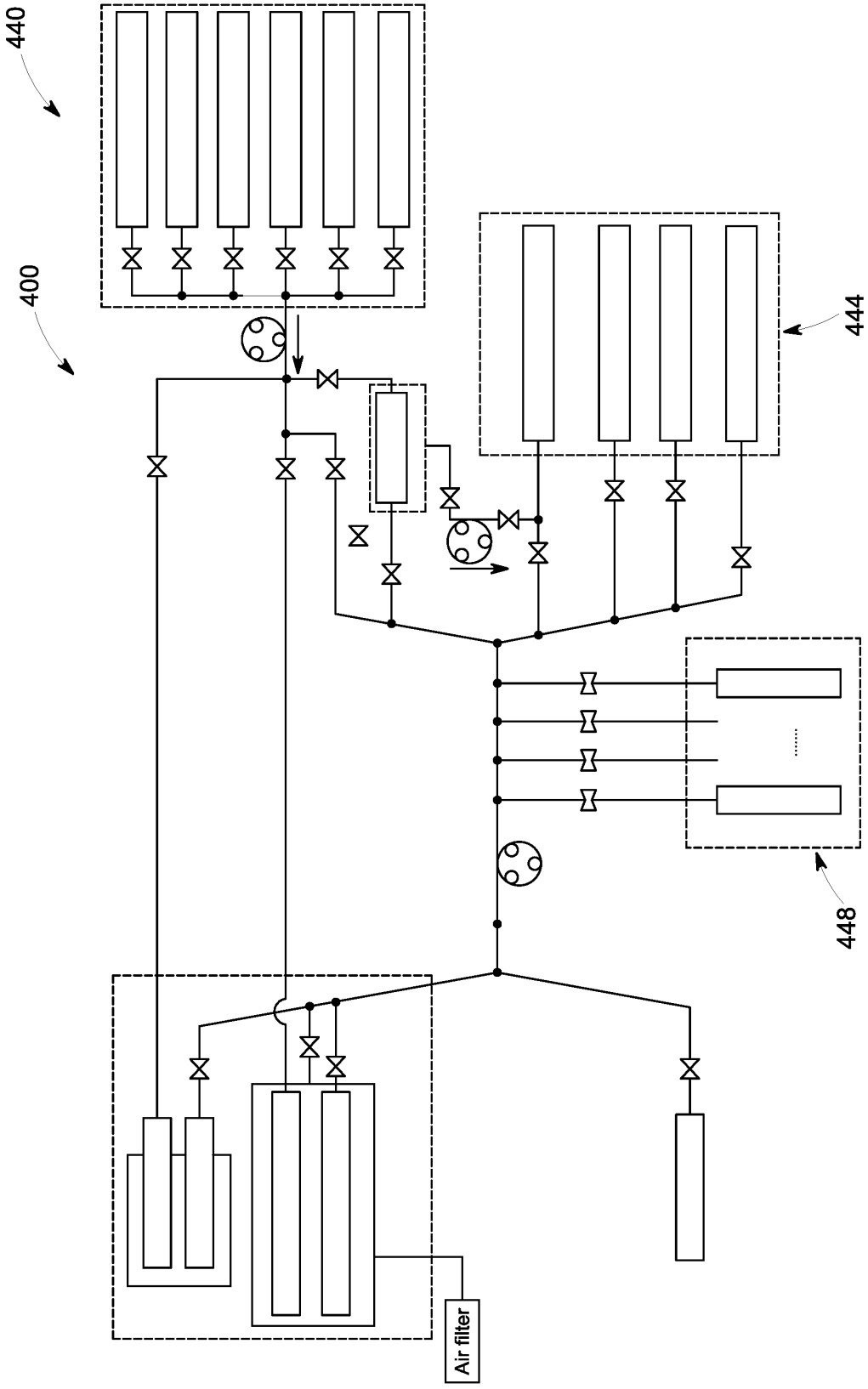

FIG. 71

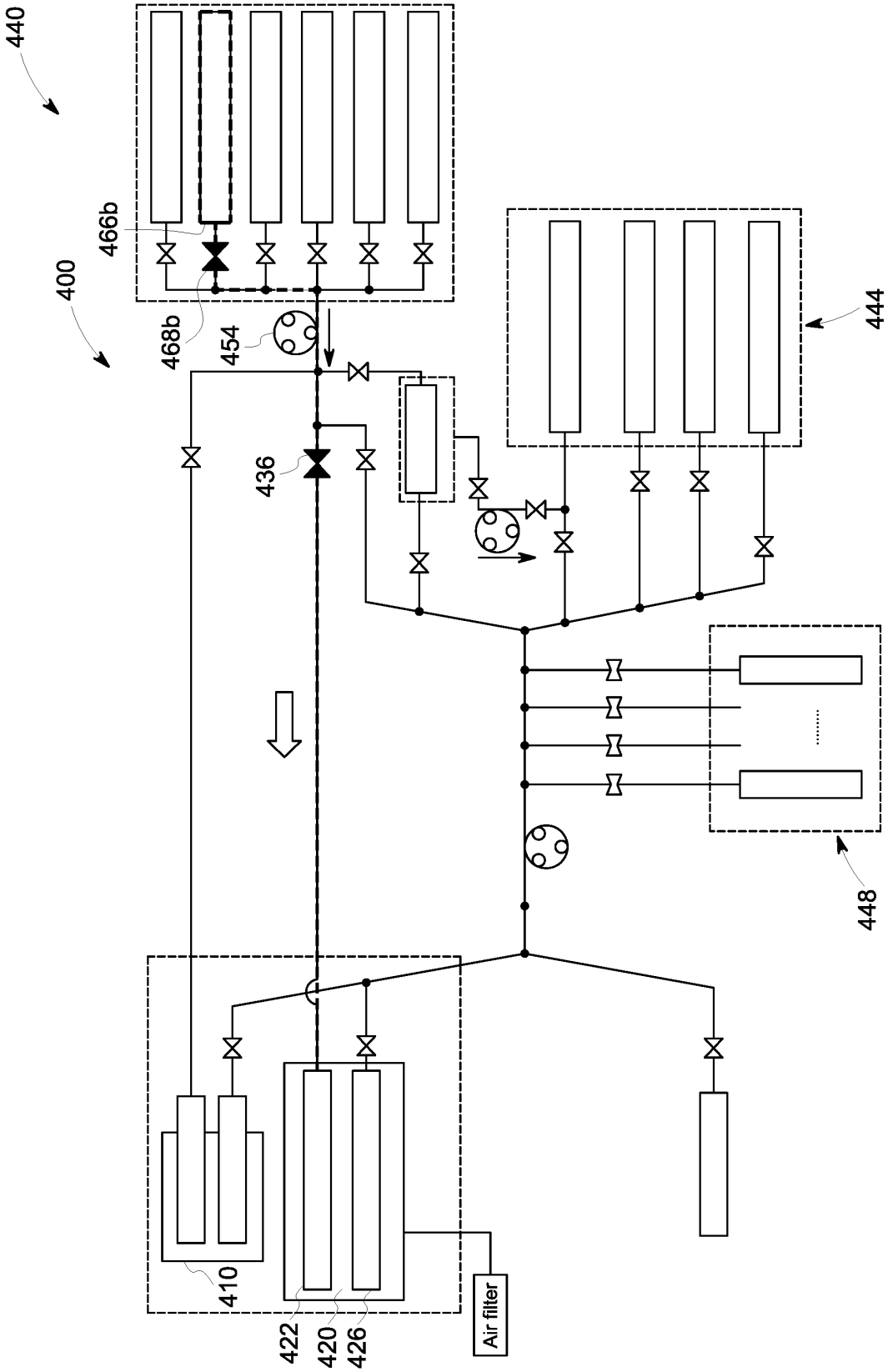

FIG. 72

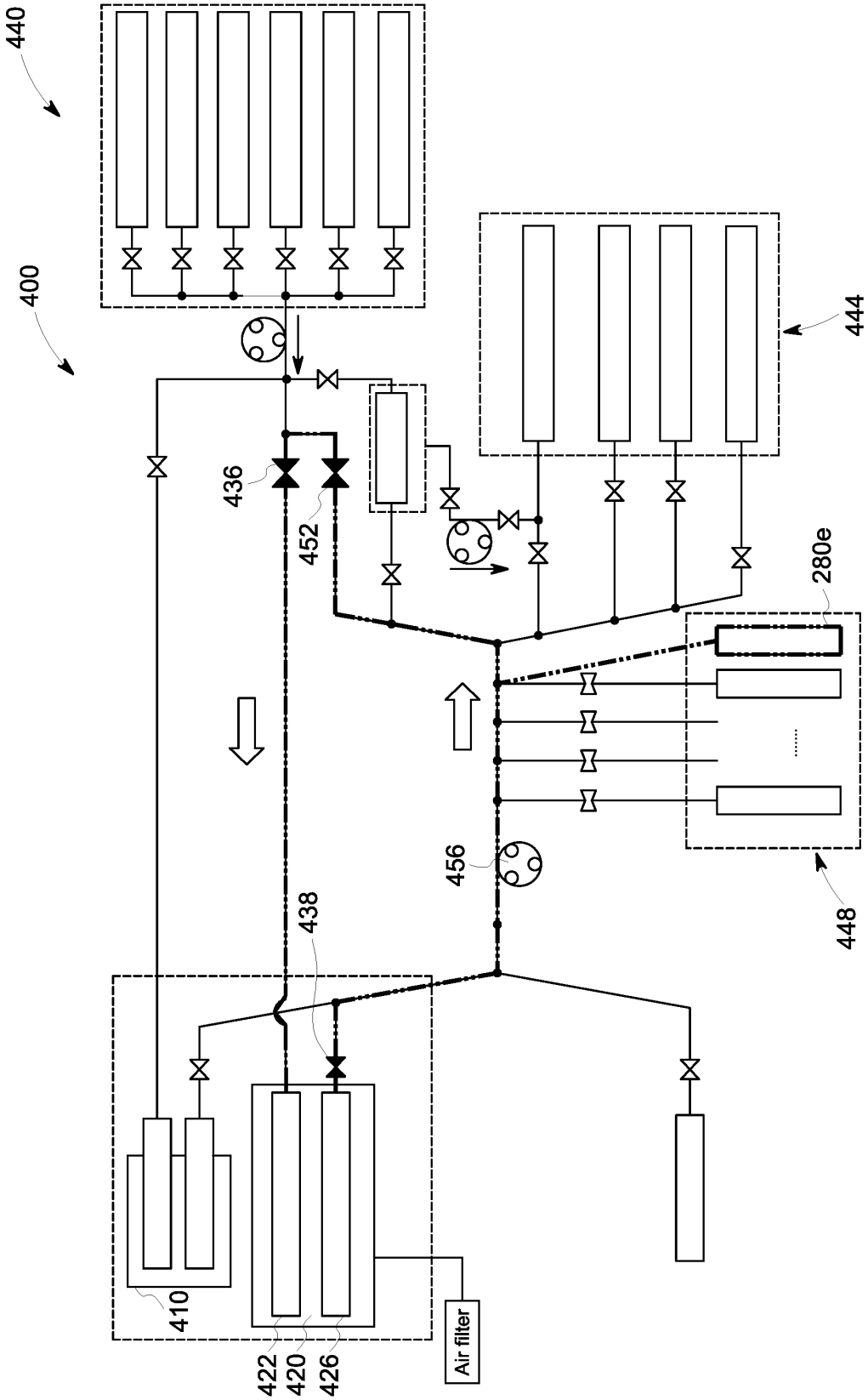

FIG. 73

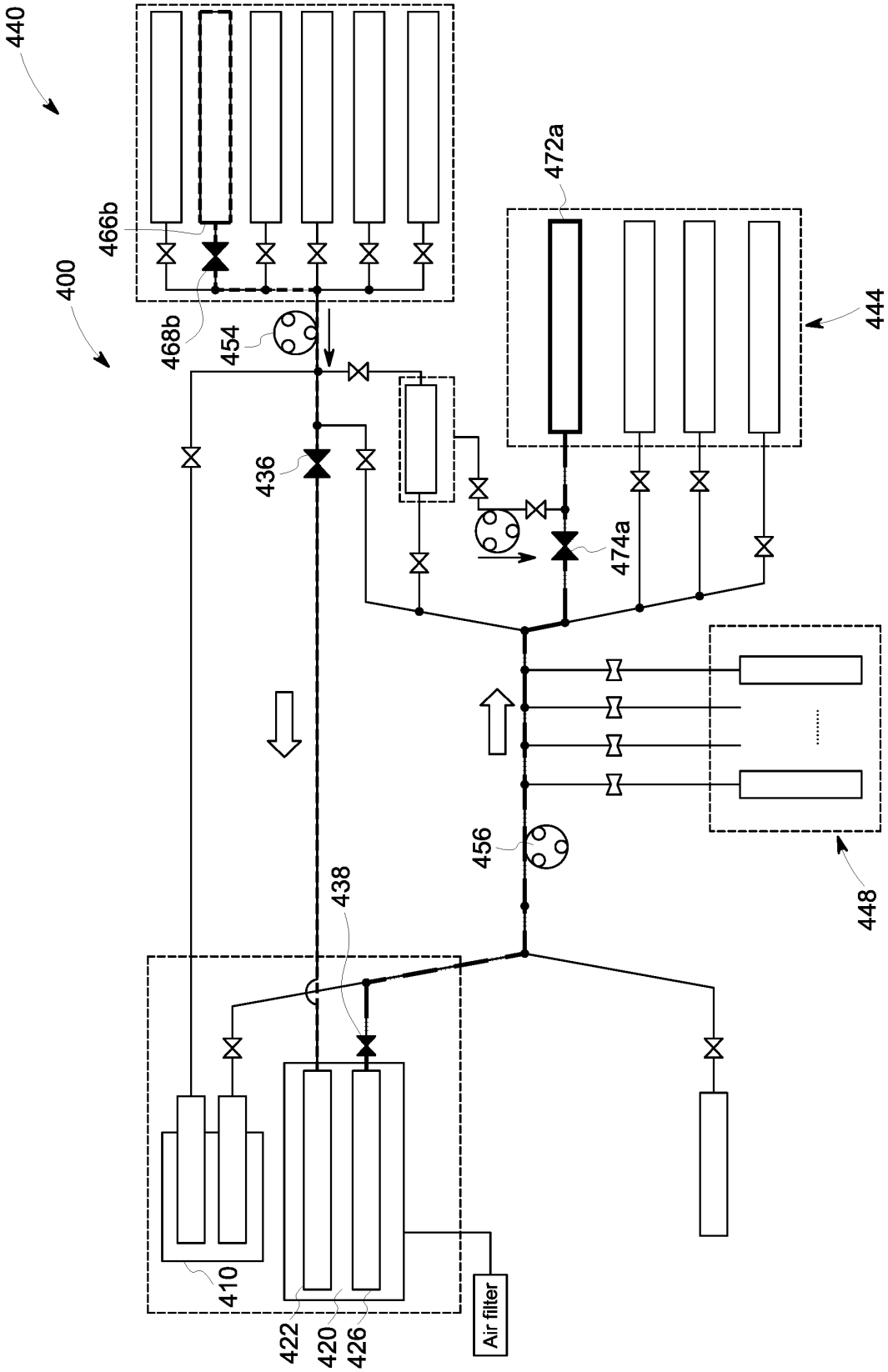
440
400
466b
468b
454
472a
444
436
474a
456
438
448
410
422
420
426
Air filter

FIG. 74

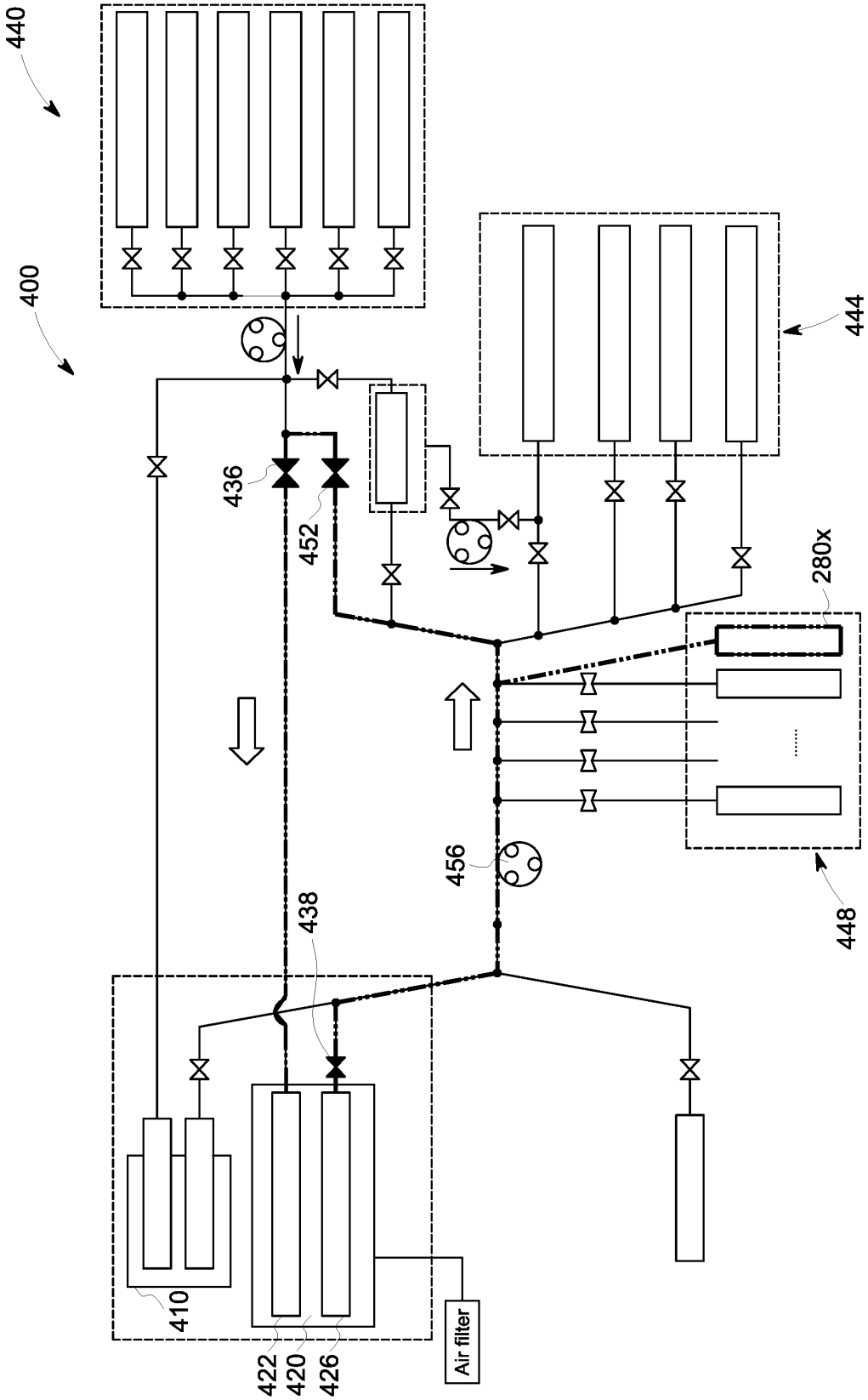

FIG. 75

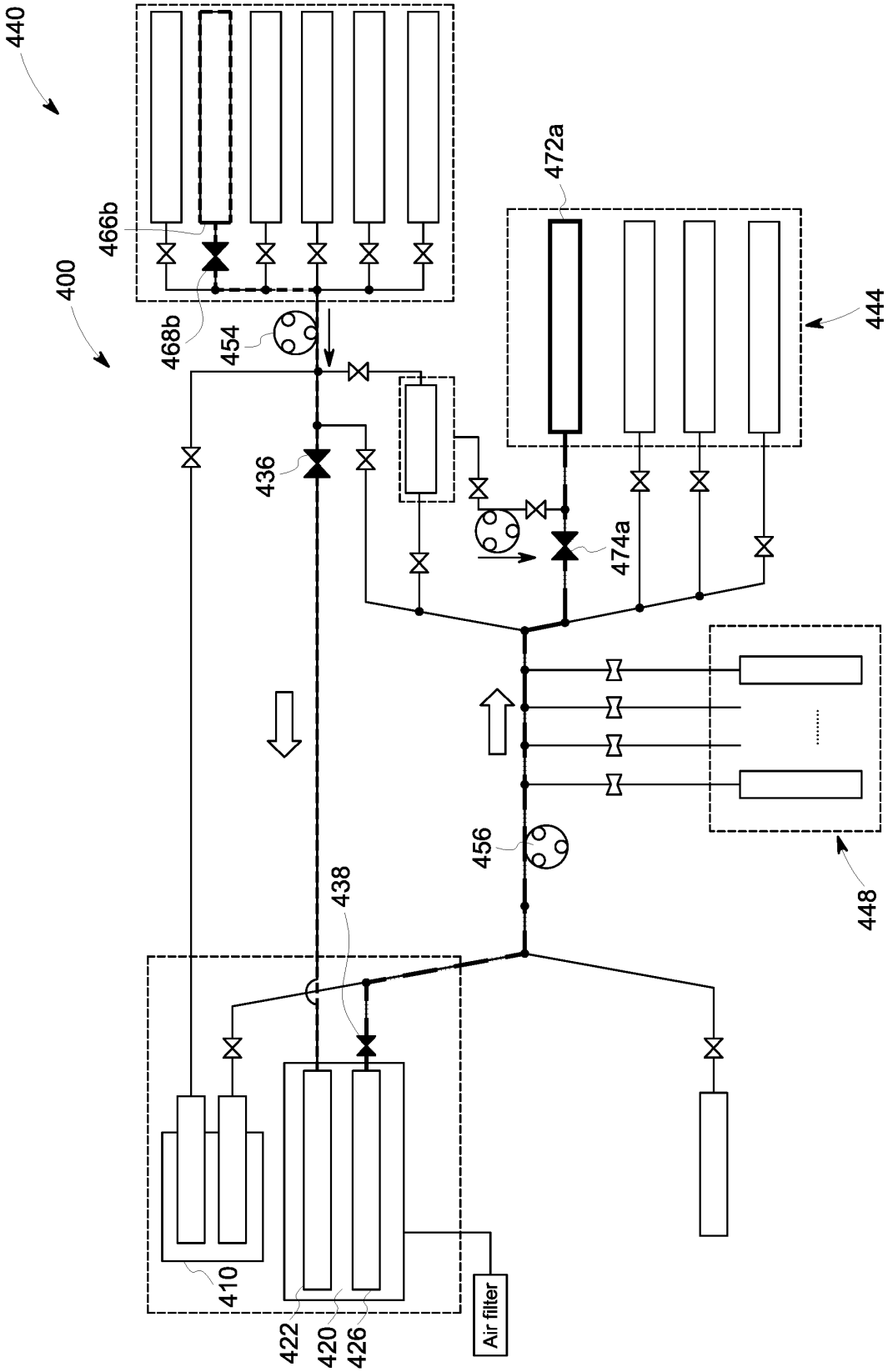
440
400
466b
468b
454
472a
444
436
474a
456
438
448
410
422
420
426
Air filter

FIG. 76

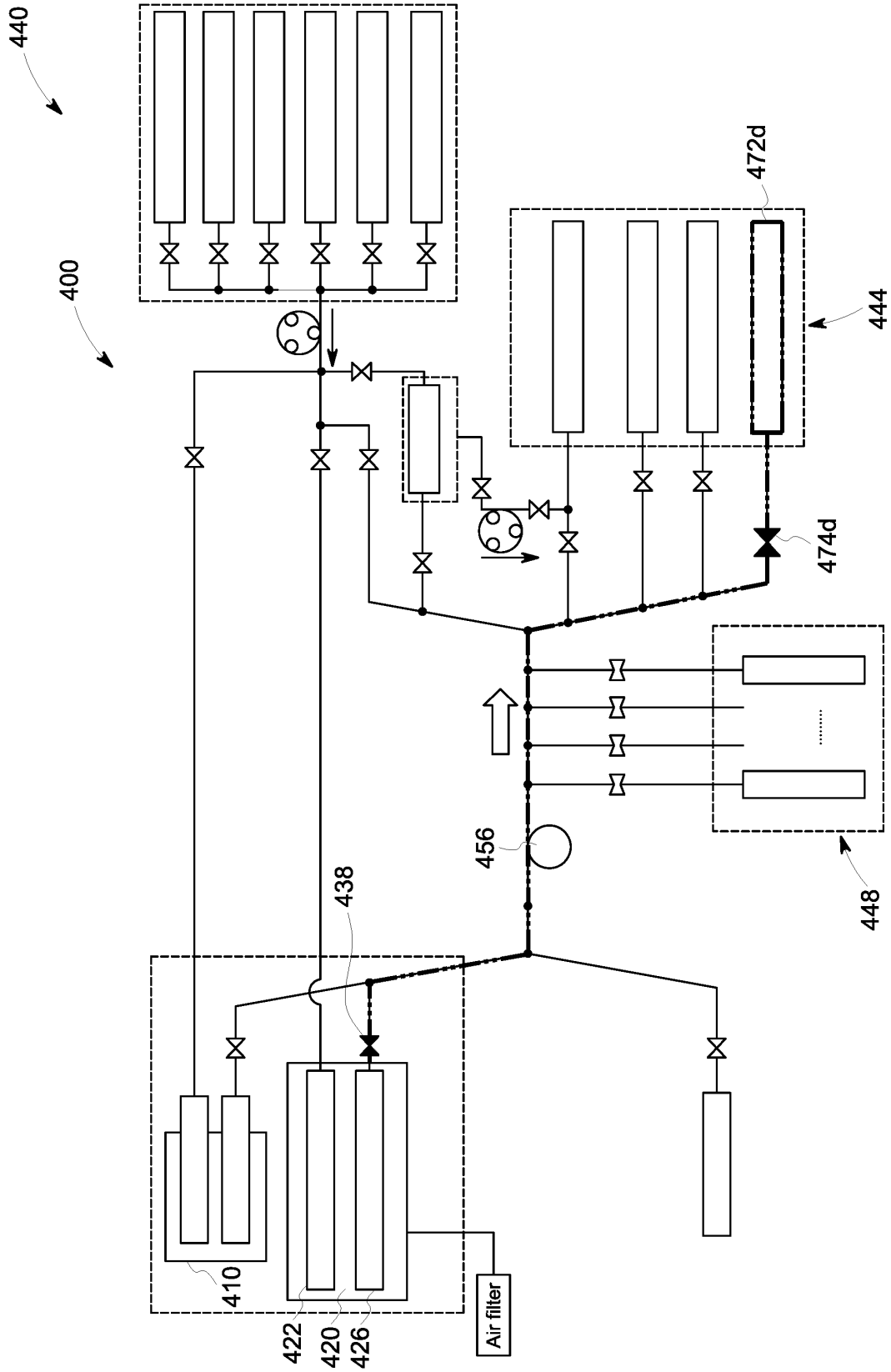

FIG. 77

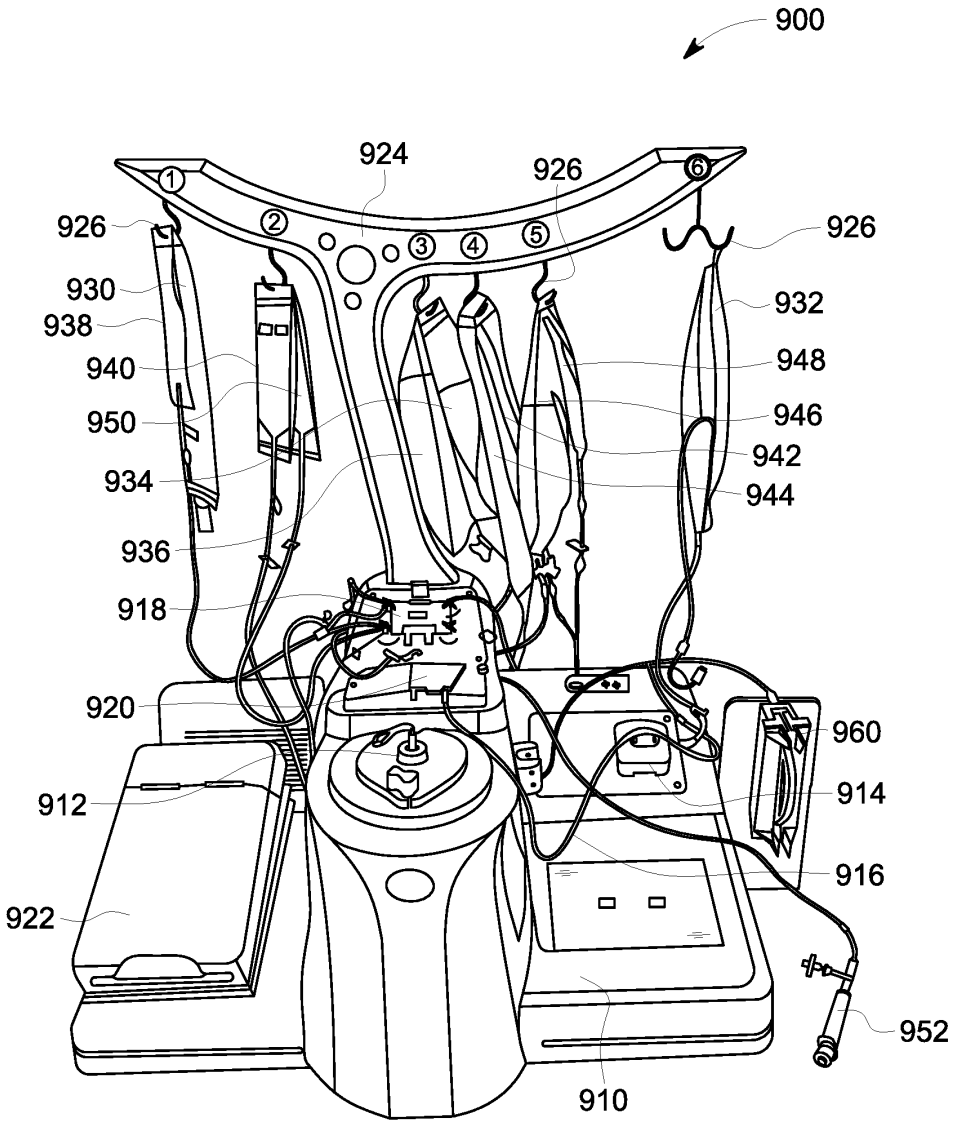
900
924
926
926
926
930
938
940
950
934
936
918
920
912
922
932
948
946
942
944
960
914
916
952
910
1
2
3
4
5
6

FIG. 78

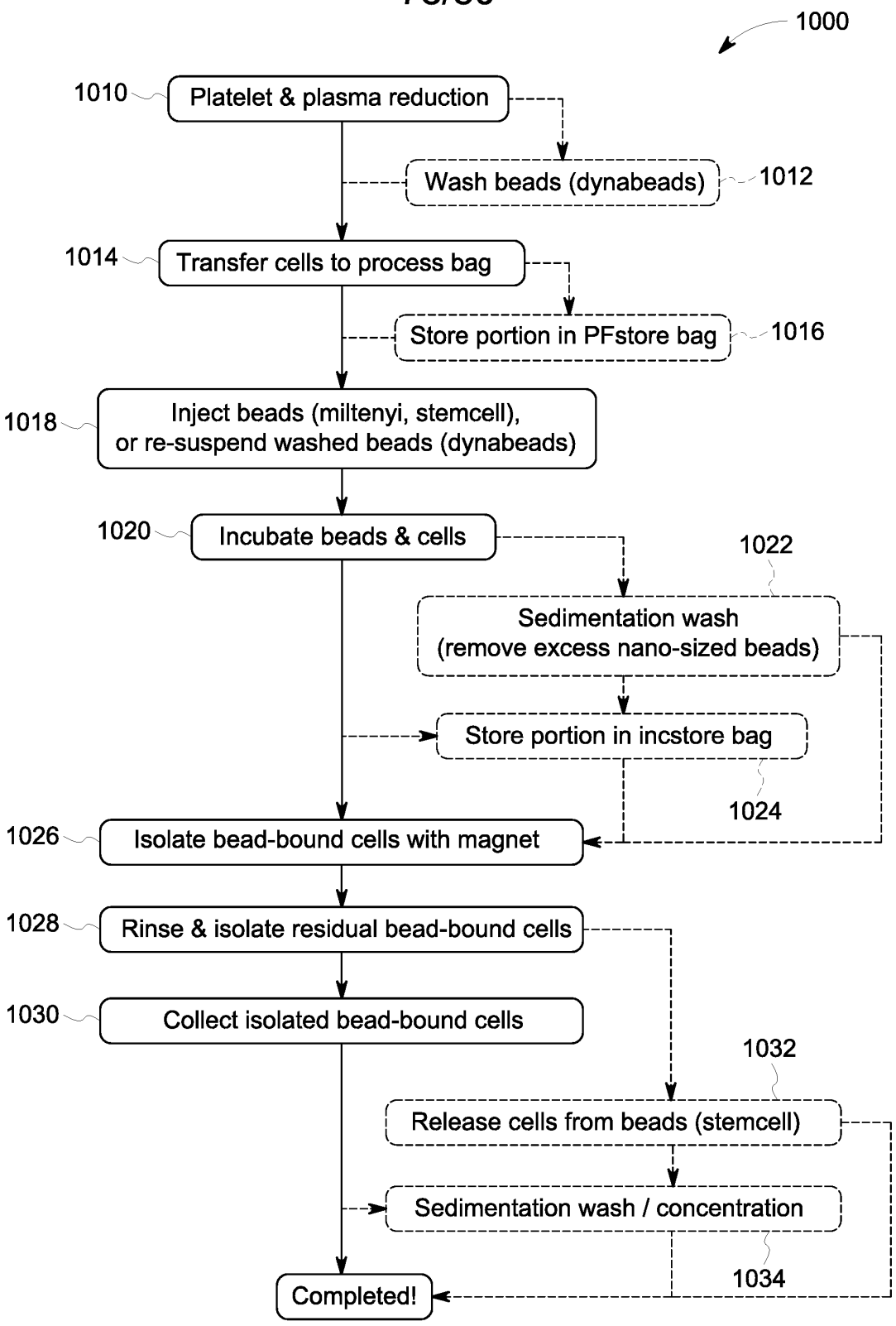
1000
1010
Platelet & plasma reduction
Wash beads (dynabeads)
1012
1014
Transfer cells to process bag
Store portion in PFstore bag
1016
1018
Inject beads (miltenyi, stemcell),
or re-suspend washed beads (dynabeads)
1020
Incubate beads & cells
1022
Sedimentation wash
(remove excess nano-sized beads)
Store portion in incstore bag
1024
1026
Isolate bead-bound cells with magnet
1028
Rinse & isolate residual bead-bound cells
1030
Collect isolated bead-bound cells
1032
Release cells from beads (stemcell)
Sedimentation wash / concentration
1034
Completed!

FIG. 79

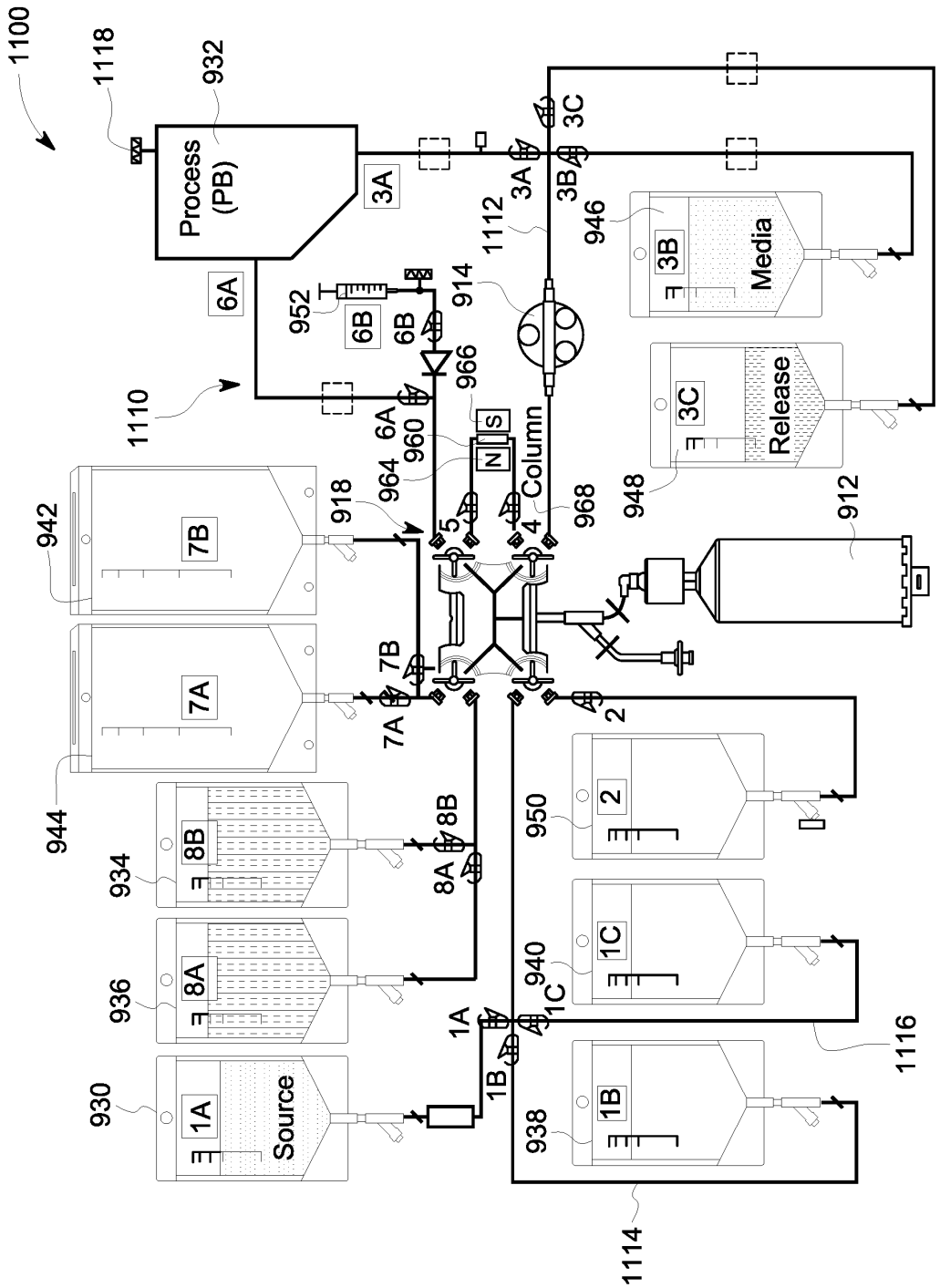
1100
1118
932
Process (PB)
3A
3A
3B
3C
1112
946
3B
Media
6A
952
6B
6B
914
966
1110
6A
960
964
N
S
Column
968
3C
Release
948
912
942
7B
918
5
4
7B
7A
7A
2
944
934
8B
8B
8A
950
2
936
8A
940
1C
1A
1C
1B
1116
930
1A
Source
938
1B
1114

FIG. 80

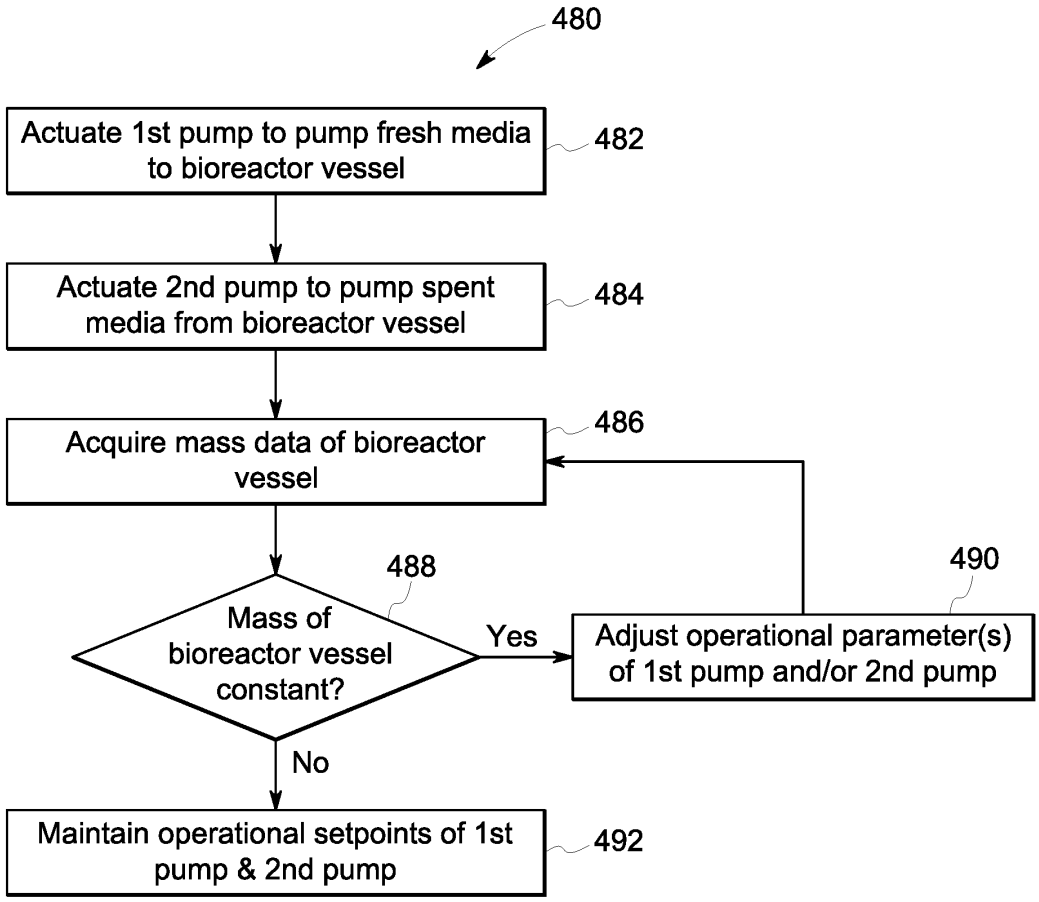
480
Actuate 1st pump to pump fresh media to bioreactor vessel
482
Actuate 2nd pump to pump spent media from bioreactor vessel
484
Acquire mass data of bioreactor vessel
486
488
Mass of bioreactor vessel constant?
Yes
490
Adjust operational parameter(s) of 1st pump and/or 2nd pump
No
Maintain operational setpoints of 1st pump & 2nd pump
492

FIG. 81