(12) INTERNATIONAL APPLICATION PUBLISHED UNDER THE PATENT COOPERATION TREATY (PCT)

(19) World Intellectual Property Organization
International Bureau

(43) International Publication Date
27 December 2007 (27.12.2007)

PCT

(10) International Publication Number
WO 2007/149945 A3

(51) International Patent Classification:
*H01L 31/00* (2006.01)

(21) International Application Number:
PCT/US2007/071703

(22) International Filing Date: 20 June 2007 (20.06.2007)

(25) Filing Language: English

(26) Publication Language: English

(30) Priority Data:
11/426,127 23 June 2006 (23.06.2006) US

(71) Applicant *(for all designated States except US)*: **APPLIED MATERIALS, INC.** [US/US]; 3050 Bowers Avenue, Santa Clara, CA 95054 (US).

(72) Inventors; and

(75) Inventors/Applicants *(for US only)*: **CHOI, Soo Young** [KR/US]; 40907 Rioja Court, Fremont, CA 94539 (US). **TAKEHARA, Takako** [JP/US]; 2811 Colony View Place, Hayward, CA 94541 (US). **WHITE, John M.** [US/US]; 2811 Colony View Place, Hayward, CA 94541 (US). **CHAE, Yong Kee** [KR/US]; 5057 Carducci Drive, Pleasanton, CA 94588 (US).

(74) Agents: **PATTERSON, B. Todd** et al.; Patterson & Sheridan, L.L.P., 3040 Post Oak Blvd., Suite 1500, Houston, Texas 77056-6582 (US).

(81) Designated States *(unless otherwise indicated, for every kind of national protection available)*: AE, AG, AL, AM, AT, AU, AZ, BA, BB, BG, BH, BR, BW, BY, BZ, CA, CH, CN, CO, CR, CU, CZ, DE, DK, DM, DO, DZ, EC, EE, EG, ES, FI, GB, GD, GE, GH, GM, GT, HN, HR, HU, ID, IL, IN, IS, JP, KE, KG, KM, KN, KP, KR, KZ, LA, LC, LK, LR, LS, LT, LU, LY, MA, MD, ME, MG, MK, MN, MW, MX, MY, MZ, NA, NG, NI, NO, NZ, OM, PG, PH, PL, PT, RO, RS, RU, SC, SD, SE, SG, SK, SL, SM, SV, SY, TJ, TM, TN, TR, TT, TZ, UA, UG, US, UZ, VC, VN, ZA, ZM, ZW.

(84) Designated States *(unless otherwise indicated, for every kind of regional protection available)*: ARIPO (BW, GH, GM, KE, LS, MW, MZ, NA, SD, SL, SZ, TZ, UG, ZM, ZW), Eurasian (AM, AZ, BY, KG, KZ, MD, RU, TJ, TM),

*[Continued on next page]*

(54) Title: METHODS AND APPARATUS FOR DEPOSITING A MICROCRYSTALLINE SILICON FILM FOR PHOTOVOLTAIC DEVICE

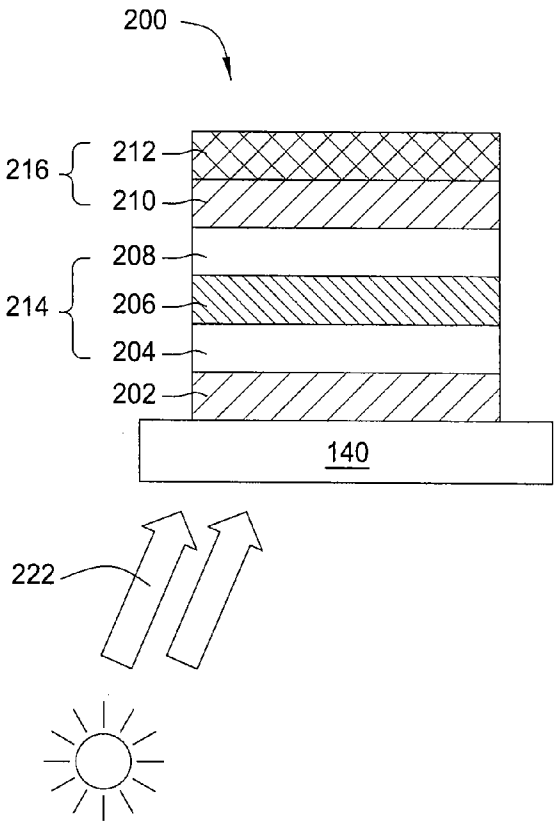


(57) Abstract: Methods for depositing a microcrystalline silicon film layer with improved deposition rate and film quality are provided in the present invention. Also, a photovoltaic (PV) cell having a microcrystalline silicon film is provided. In one embodiment, the method produces a microcrystalline silicon film on a substrate at a deposition rate greater than about 20 nm per minute, wherein the microcrystalline silicon film has a crystallized volume between about 20 percent to about 80 percent.

WO 2007/149945 A3

European (AT, BE, BG, CH, CY, CZ, DE, DK, EE, ES, FI, FR, GB, GR, HU, IE, IS, IT, LT, LU, LV, MC, MT, NL, PL, PT, RO, SE, SI, SK, TR), OAPI (BF, BJ, CF, CG, CI, CM, GA, GN, GQ, GW, ML, MR, NE, SN, TD, TG).

**Published:**

— *with international search report*

**(88) Date of publication of the international search report:**
21 February 2008