(12) INTERNATIONAL APPLICATION PUBLISHED UNDER THE PATENT COOPERATION TREATY (PCT)

(19) World Intellectual Property Organization
International Bureau

(43) International Publication Date
19 February 2009 (19.02.2009)

PCT

(10) International Publication Number
WO 2009/022930 A1

(51) International Patent Classification:
F03B 13/18 (2006.01)

(21) International Application Number:
PCT/RS2007/000015

(22) International Filing Date: 16 August 2007 (16.08.2007)

(25) Filing Language: English

(26) Publication Language: English

(30) Priority Data:
P-2007/0346 13 August 2007 (13.08.2007) RS

(71) Applicant and
(72) Inventor: **DRAGIC, Mile** [RS/RS]; Makedonska 11, Zrenjanin 23000 (RS).

(81) Designated States *(unless otherwise indicated, for every kind of national protection available)*: AE, AG, AL, AM, AT, AU, AZ, BA, BB, BG, BH, BR, BW, BY, BZ, CA, CH, CN, CO, CR, CU, CZ, DE, DK, DM, DO, DZ, EC, EE, EG, ES, FI, GB, GD, GE, GH, GM, GT, HN, HR, HU, ID, IL, IN, IS, JP, KE, KG, KM, KN, KP, KR, KZ, LA, LC, LK, LR, LS, LT, LU, LY, MA, MD, ME, MG, MK, MN, MW, MX, MY, MZ, NA, NG, NI, NO, NZ, OM, PG, PH, PL, PT, RO, RS, RU, SC, SD, SE, SG, SK, SL, SM, SV, SY, TJ, TM, TN, TR, TT, TZ, UA, UG, US, UZ, VC, VN, ZA, ZM, ZW.

(84) Designated States *(unless otherwise indicated, for every kind of regional protection available)*: ARIPO (BW, GH, GM, KE, LS, MW, MZ, NA, SD, SL, SZ, TZ, UG, ZM, ZW), Eurasian (AM, AZ, BY, KG, KZ, MD, RU, TJ, TM), European (AT, BE, BG, CH, CY, CZ, DE, DK, EE, ES, FI, FR, GB, GR, HU, IE, IS, IT, LT, LU, LV, MC, MT, NL, PL, PT, RO, SE, SI, SK, TR), OAPI (BF, BJ, CF, CG, CI, CM, GA, GN, GQ, GW, ML, MR, NE, SN, TD, TG).

Declaration under Rule 4.17:
— *of inventorship (Rule 4.17(iv))*

Published:
— *with international search report*

(54) **Title:** SYSTEM AND METHOD FOR CONVERSION OF WAVE ENERGY INTO ELECTRICAL ENERGY

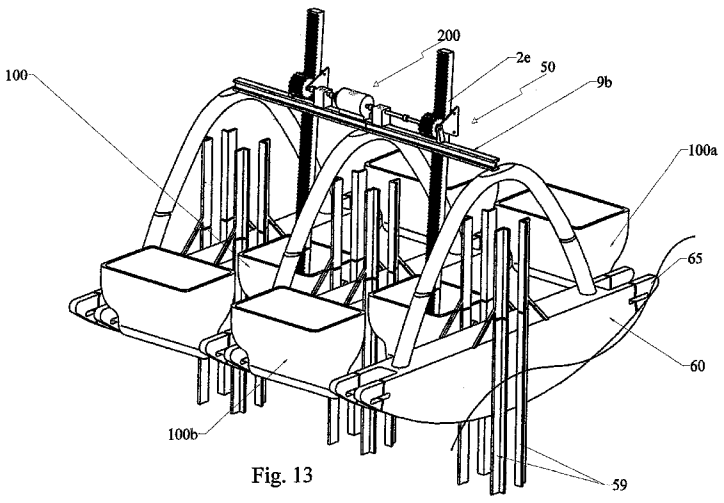

Fig. 13

(57) **Abstract:** The present disclosure relates to an economical and ecological process for producing electrical energy. According to the disclosure, electrical energy is produced by conversion of wave energy. In illustrated embodiments, aquatic waves lift a floating body which, by use of a transmission system, linearly moves a magnet in the induction coil, or converts vertical motion of the floating body into circular motion of the generator which generates electricity. The energy generation system includes either flexible or inflexible transmission shafts which transmit the motion to rotary or linear generators. The present disclosure includes the system for producing electricity with fixed support to the bottom of the sea, and the system with lateral and central floating bodies, with rotating or linear generators coupled to transmission shafts positioned above the system for producing electricity.

WO 2009/022930 A1