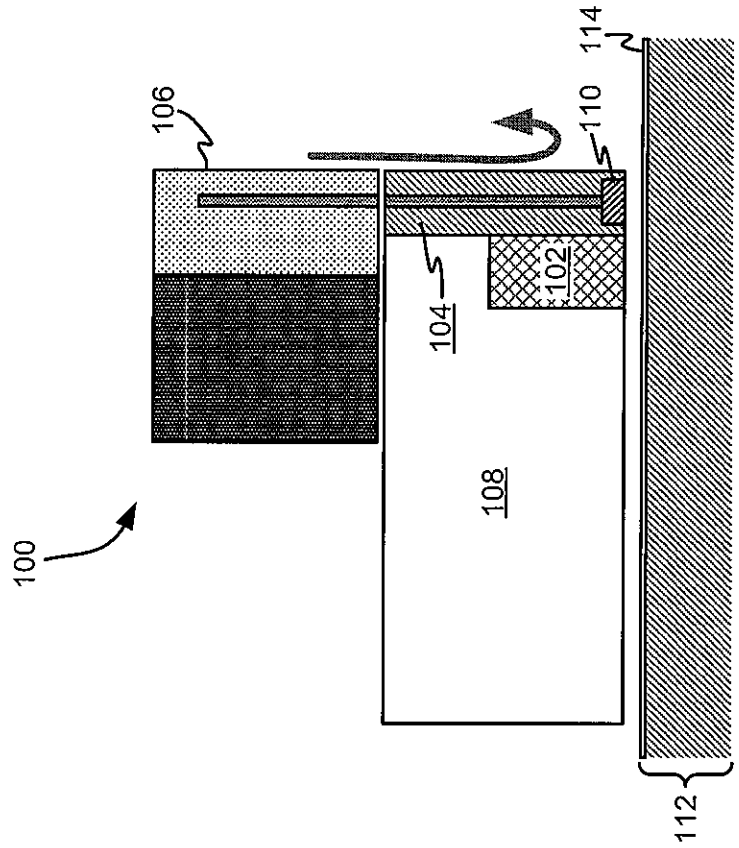

FIG. 1
(prior art)

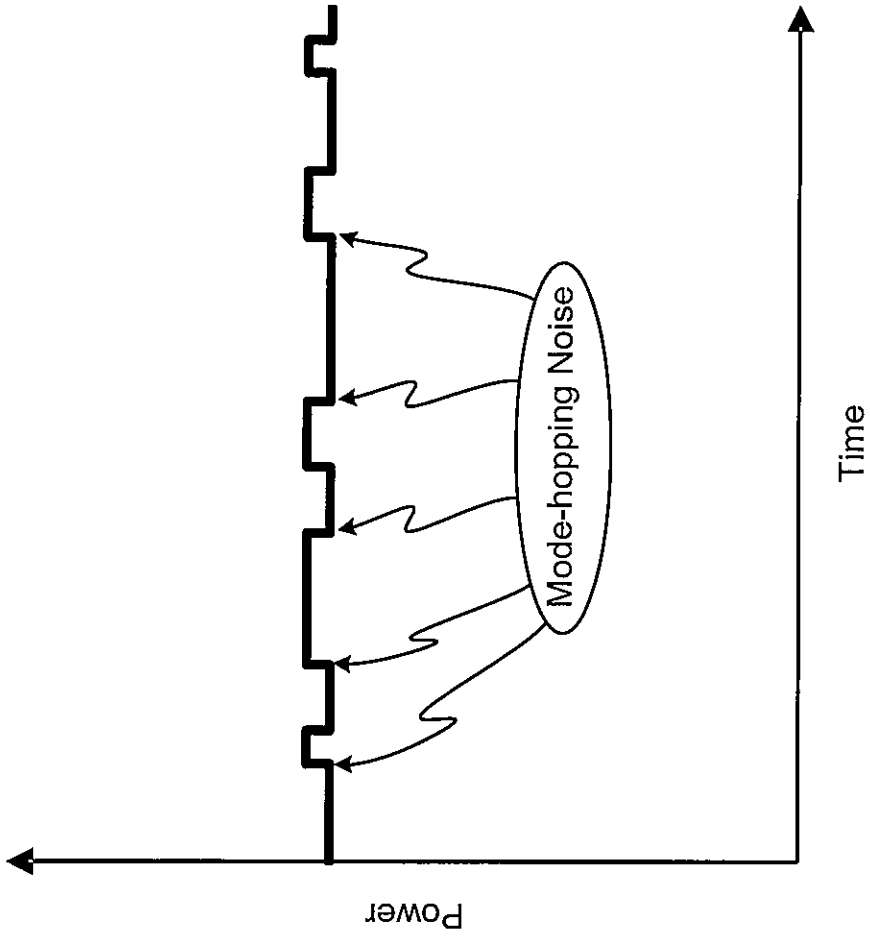

FIG. 2

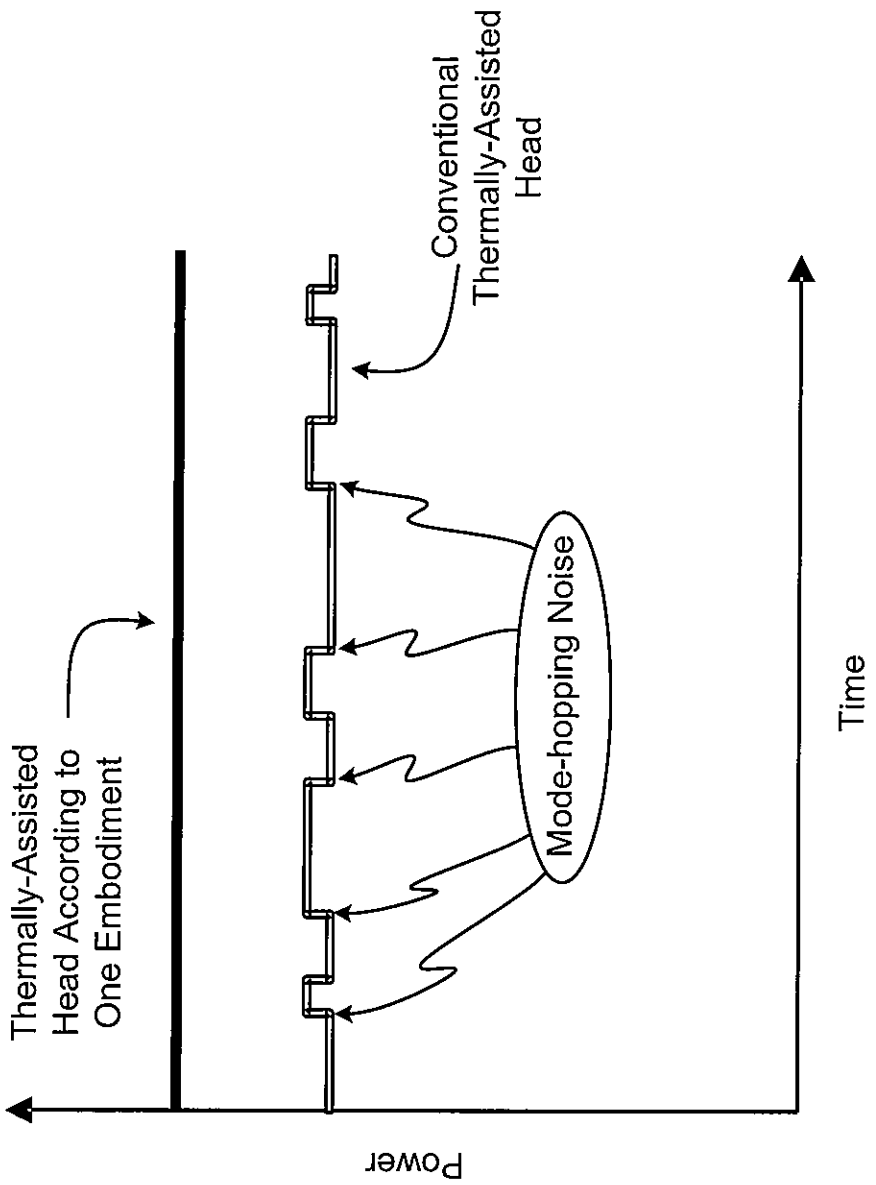
Thermally-Assisted Head According to One Embodiment
Conventional Thermally-Assisted Head
Mode-hopping Noise
Power
Time

FIG. 3A

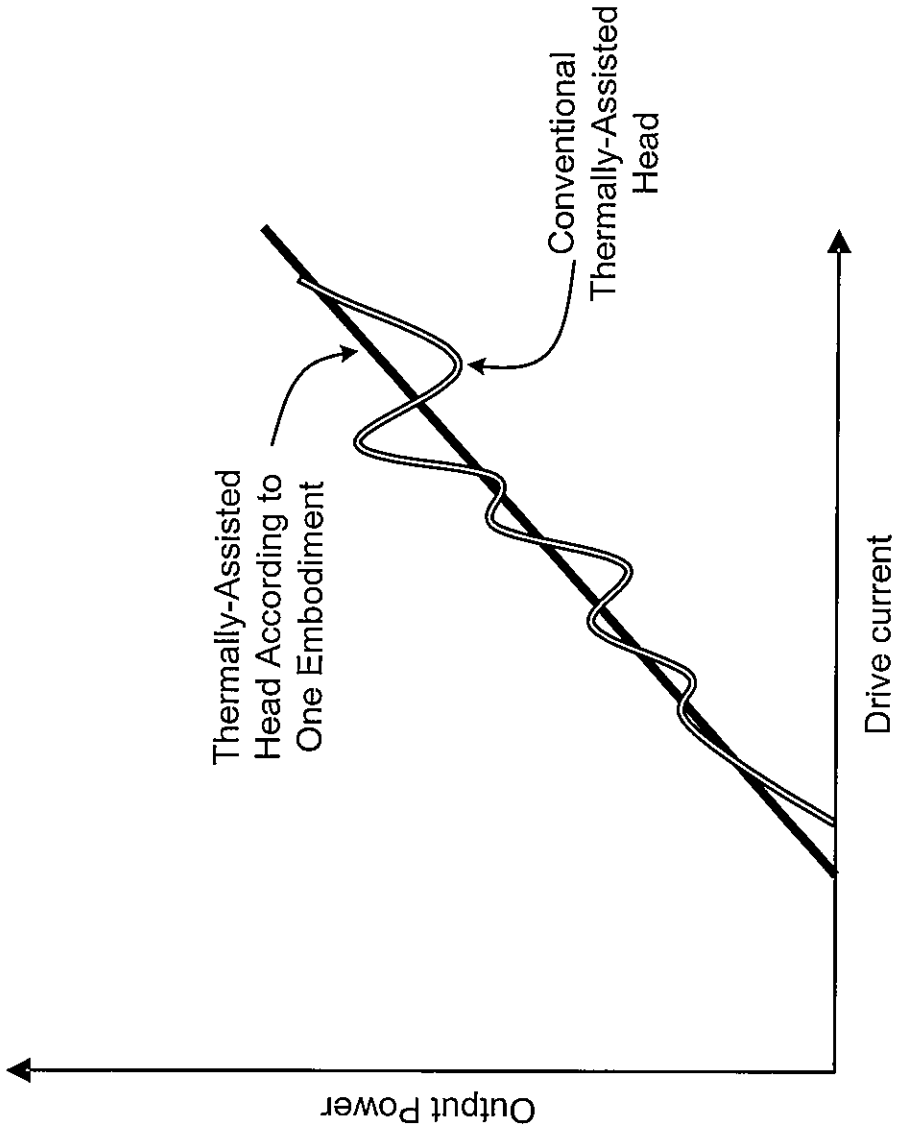
Output Power
Drive current
Thermally-Assisted Head According to One Embodiment
Conventional Thermally-Assisted Head

FIG. 3B

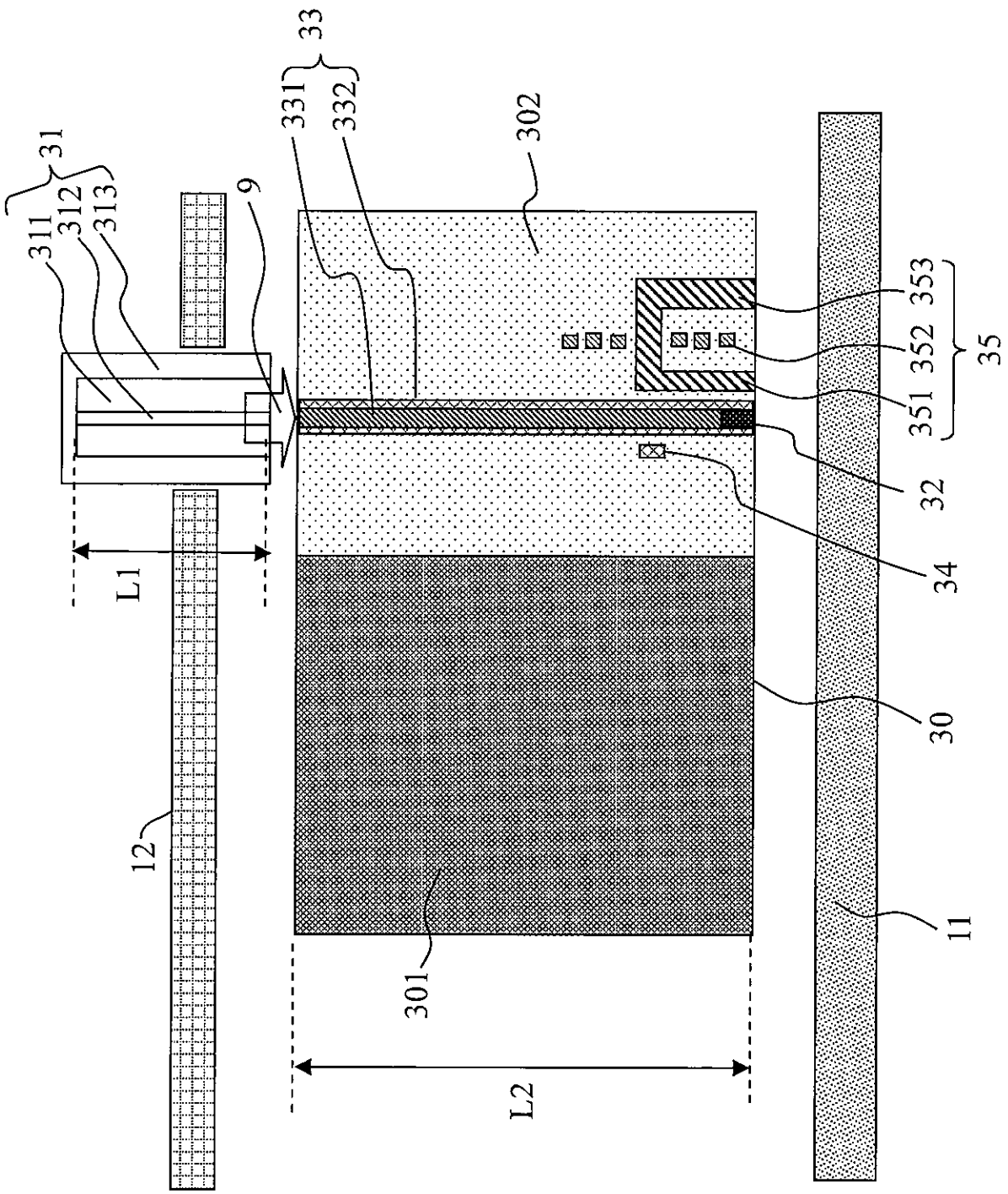
31
311
312
313
9
33
331
332
302
353
352
351
35
32
34
30
L1
12
301
L2
11

FIG. 4

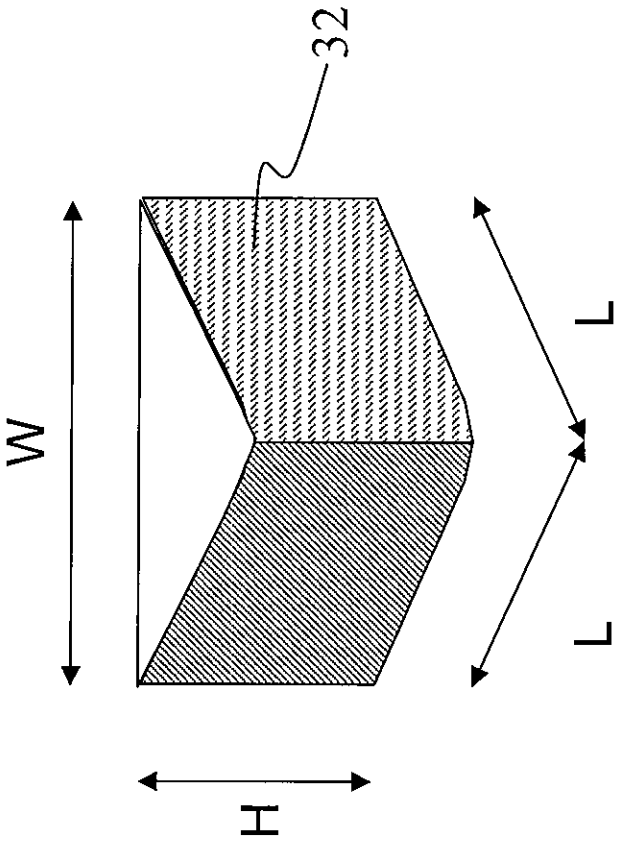

FIG. 5

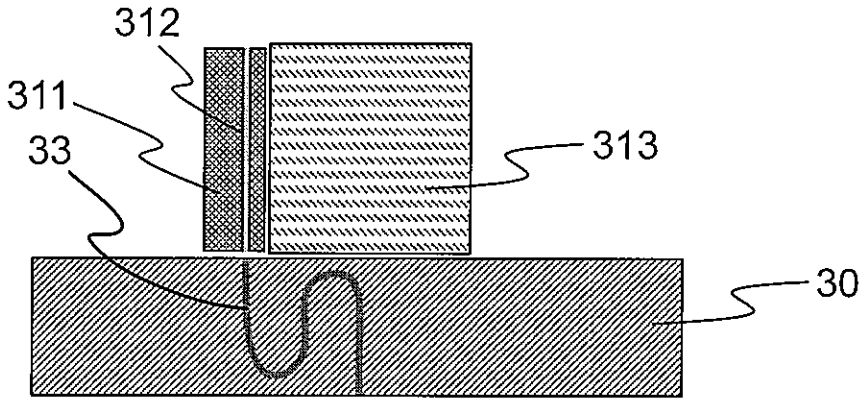

FIG. 6A

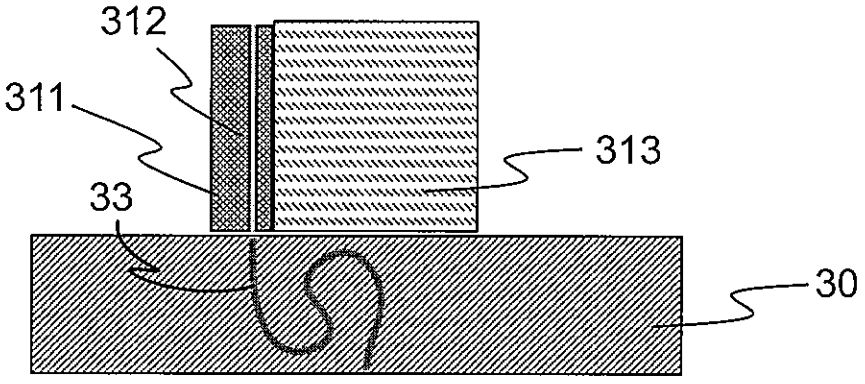

FIG. 6B

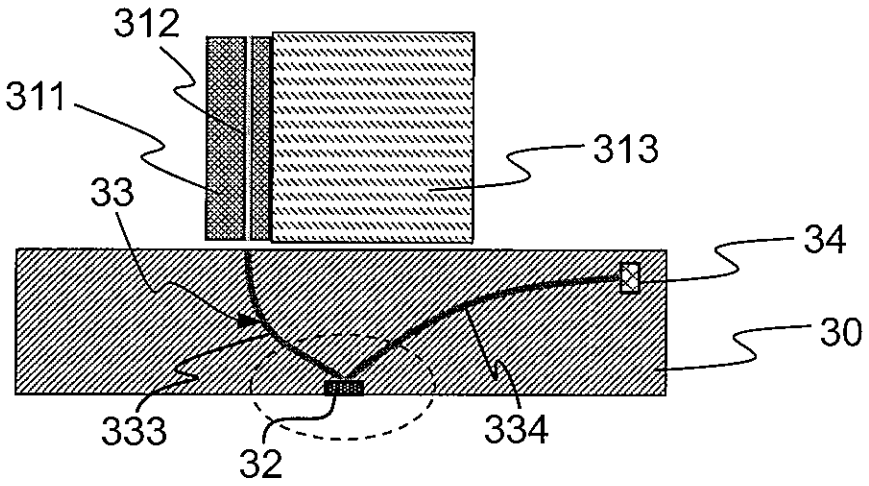

FIG. 7A

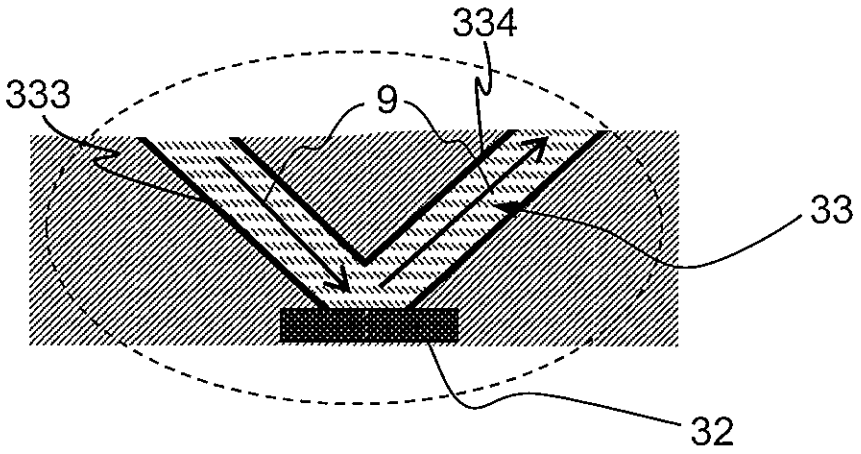

FIG. 7B

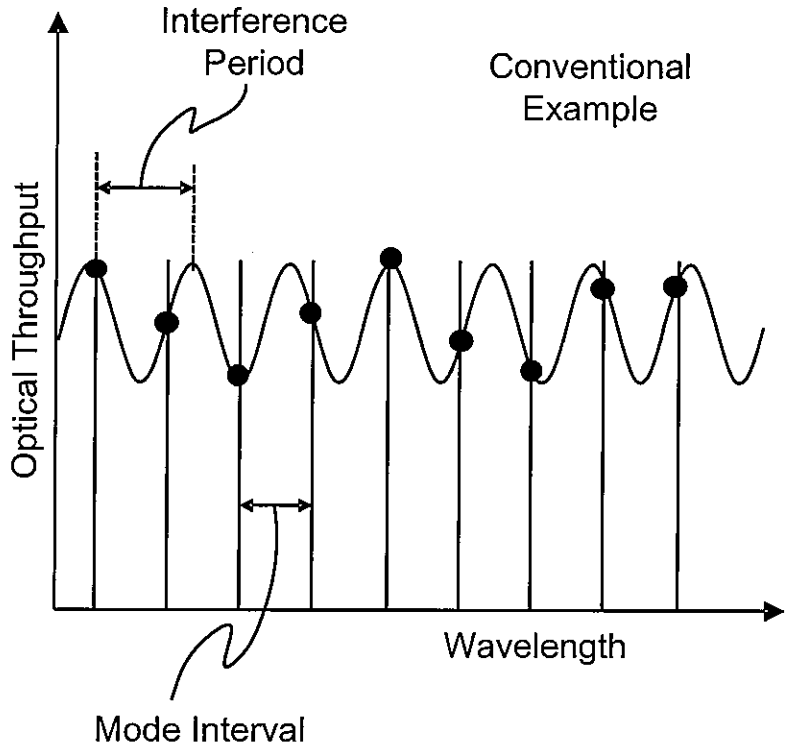
Interference
Period
Conventional
Example
Optical Throughput
Wavelength
Mode Interval

FIG. 8A

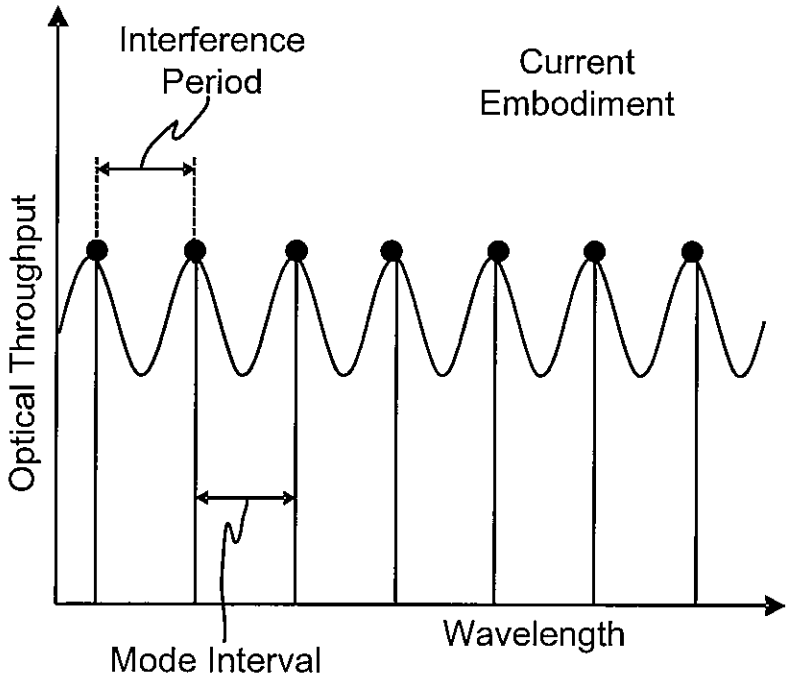
Interference
Period
Current
Embodiment
Optical Throughput
Wavelength
Mode Interval

FIG. 8B

LD = 330 μm x 3.5
WG = 300 μm x 1.9

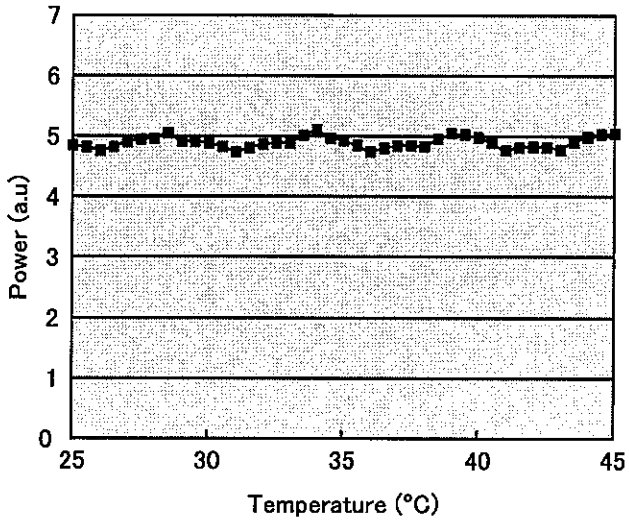

LD = 250 μm x 3.5
WG = 300 μm x 1.9

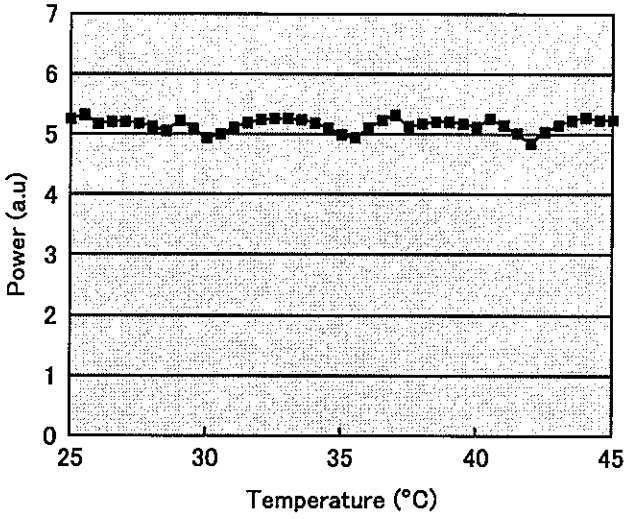

LD = 165 μm x 3.5
WG = 300 μm x 1.9

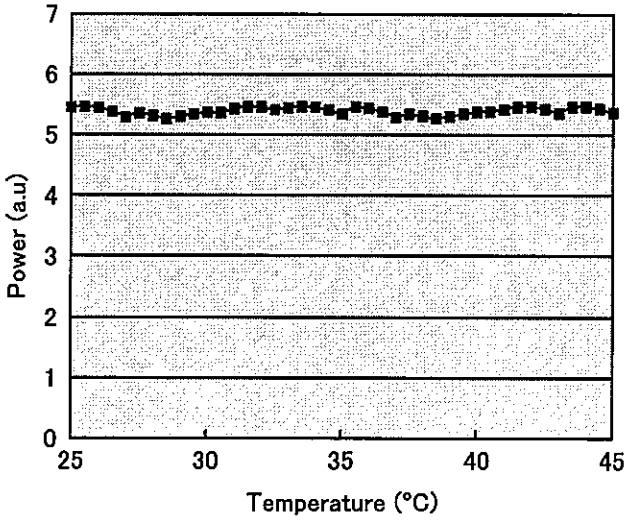

FIG. 9

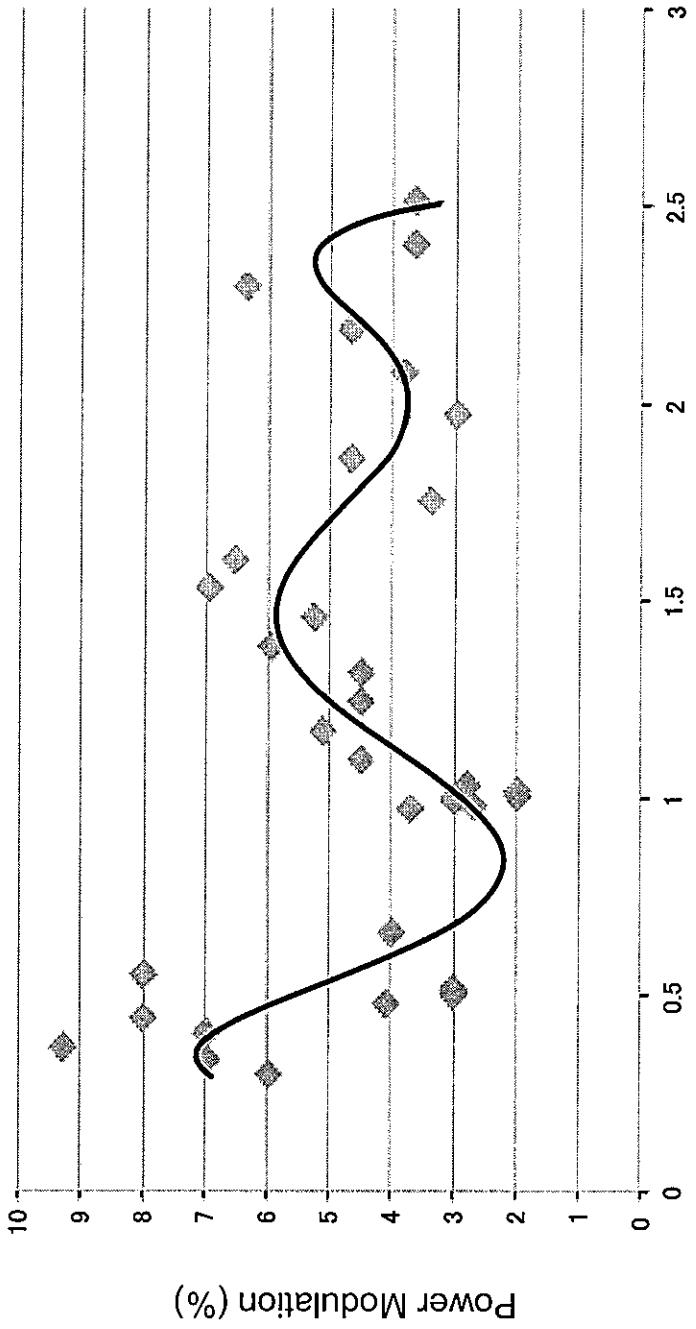
Power Modulation (%)
10
9
8
7
6
5
4
3
2
1
0
0
0.5
1
1.5
2
2.5
3
Optical Path Ratio (WG/LD)

FIG. 10

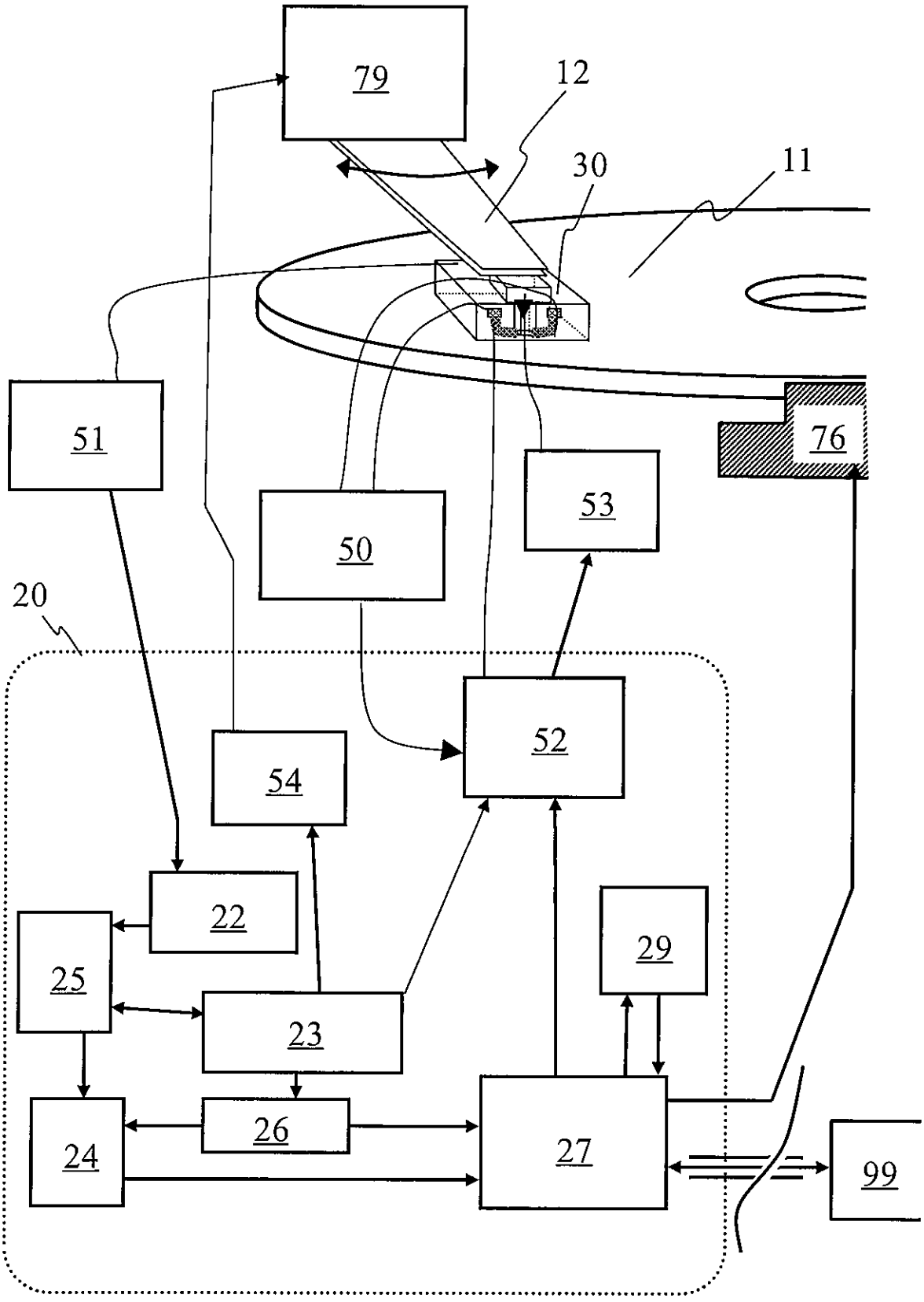

FIG. 11

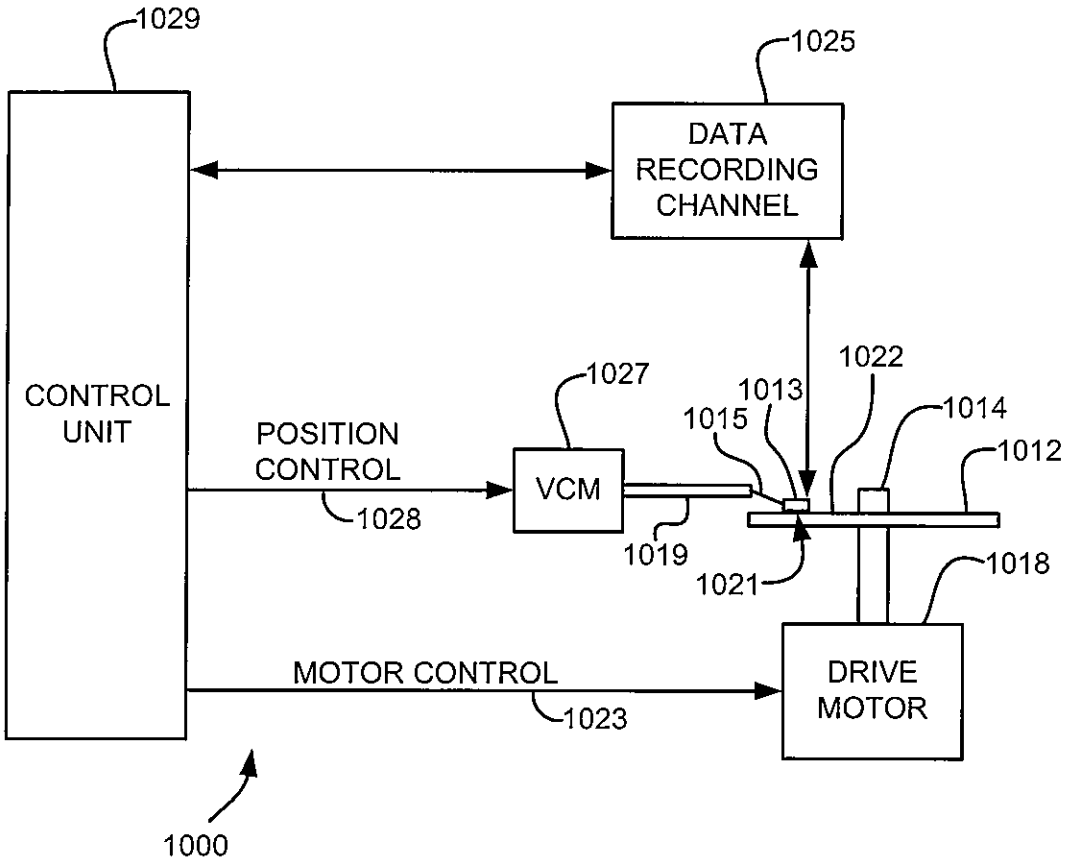
1029
1025
DATA
RECORDING
CHANNEL
CONTROL
UNIT
1027
1022
1013
1015
1014
1012
POSITION
CONTROL
1028
VCM
1019
1021
1018
MOTOR CONTROL
1023
DRIVE
MOTOR
1000

FIG. 12

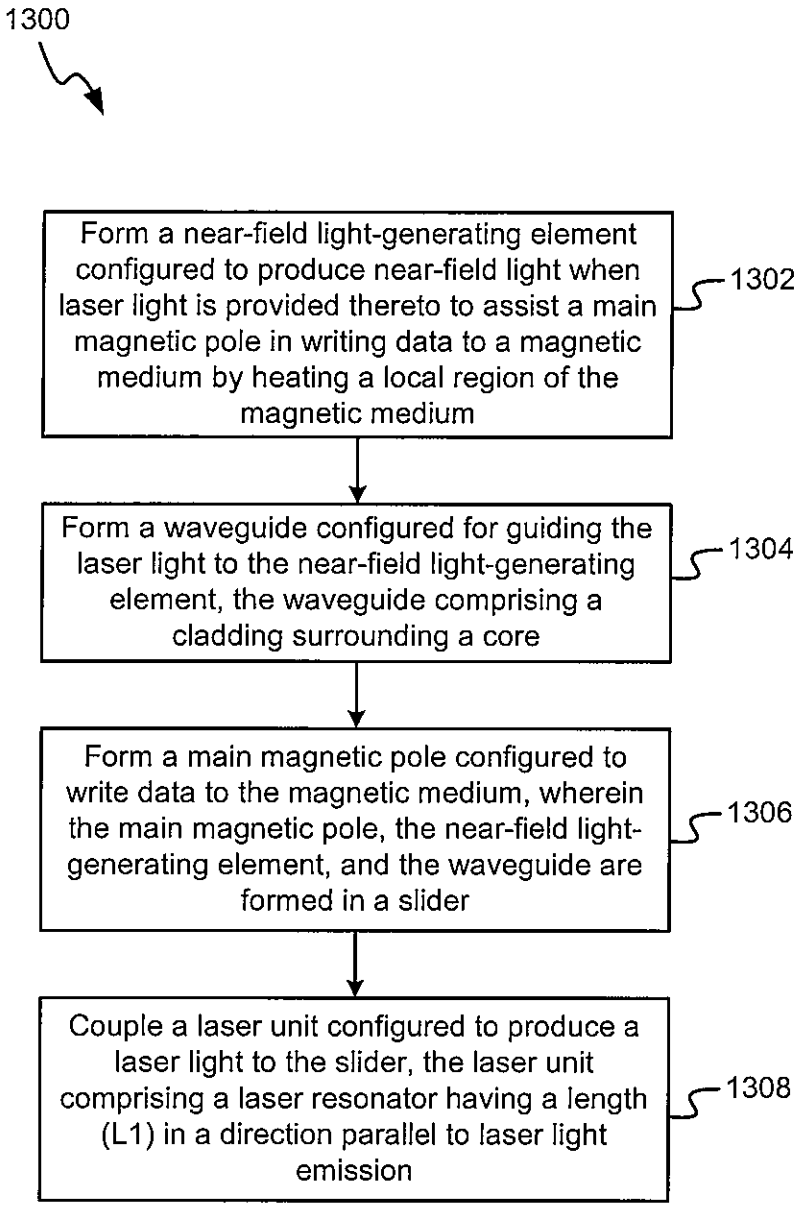
1300
Form a near-field light-generating element configured to produce near-field light when laser light is provided thereto to assist a main magnetic pole in writing data to a magnetic medium by heating a local region of the magnetic medium
1302
Form a waveguide configured for guiding the laser light to the near-field light-generating element, the waveguide comprising a cladding surrounding a core
1304
Form a main magnetic pole configured to write data to the magnetic medium, wherein the main magnetic pole, the near-field light-generating element, and the waveguide are formed in a slider
1306
Couple a laser unit configured to produce a laser light to the slider, the laser unit comprising a laser resonator having a length (L1) in a direction parallel to laser light emission
1308

FIG. 13