Fig.1

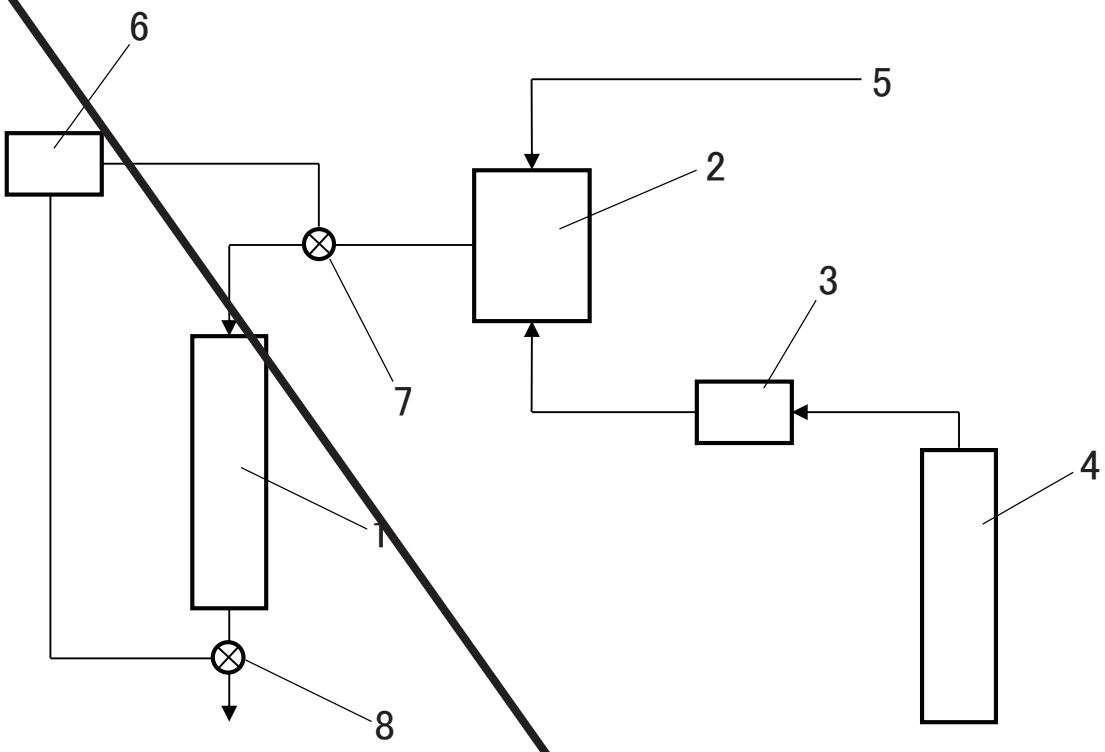
6
5
2
3
7
4
1
8

Fig.2

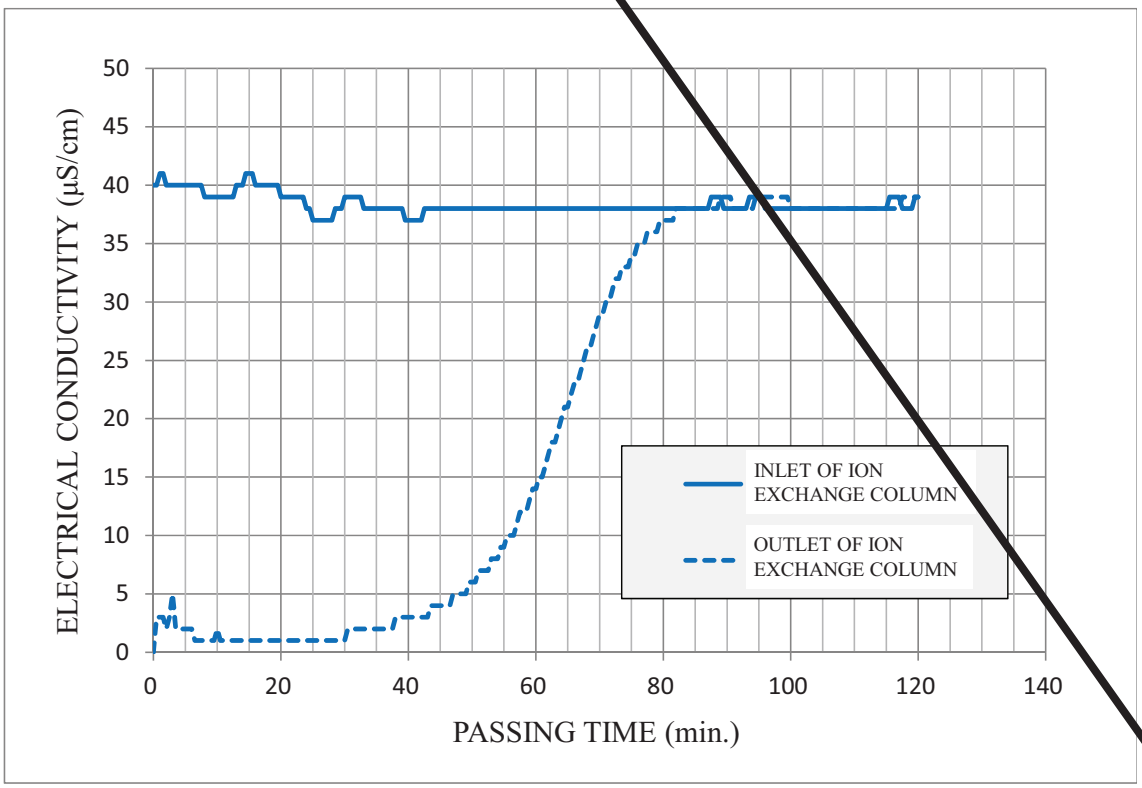
ELECTRICAL CONDUCTIVITY (μS/cm)
50
45
40
35
30
25
20
15
10
5
0
0
20
40
60
80
100
120
140
PASSING TIME (min.)
INLET OF ION EXCHANGE COLUMN
OUTLET OF ION EXCHANGE COLUMN

Fig.3

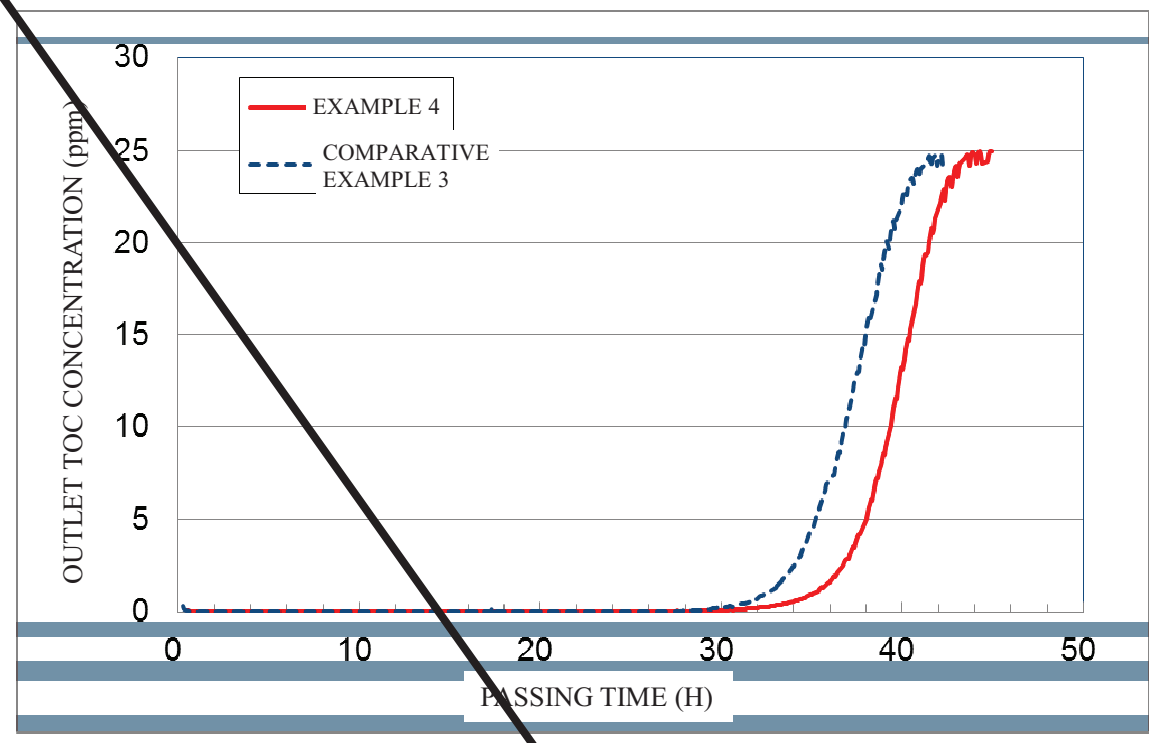
30
25
20
15
10
5
0
OUTLET TOC CONCENTRATION (ppm)
EXAMPLE 4
COMPARATIVE EXAMPLE 3
0
10
20
30
40
50
PASSING TIME (H)

Fig.1

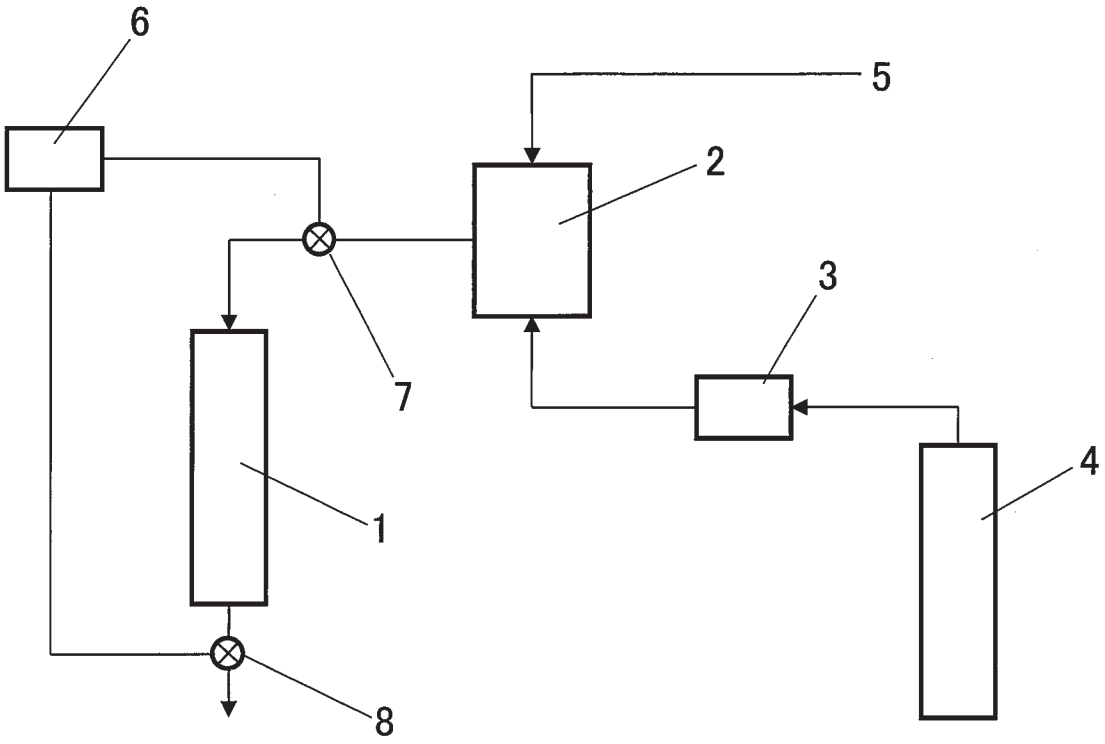
6
5
2
3
7
1
4
8

Fig.2

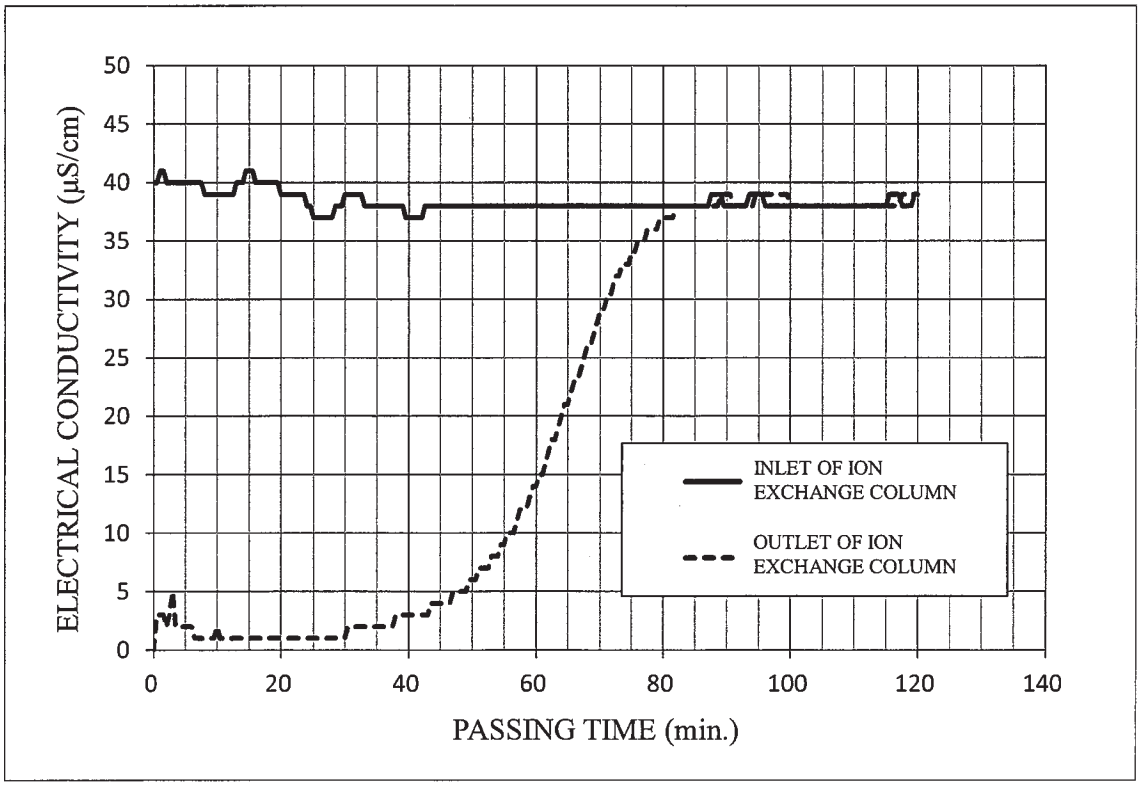
ELECTRICAL CONDUCTIVITY (μS/cm)
50
45
40
35
30
25
20
15
10
5
0
0
20
40
60
80
100
120
140
PASSING TIME (min.)
INLET OF ION EXCHANGE COLUMN
OUTLET OF ION EXCHANGE COLUMN

Fig.3

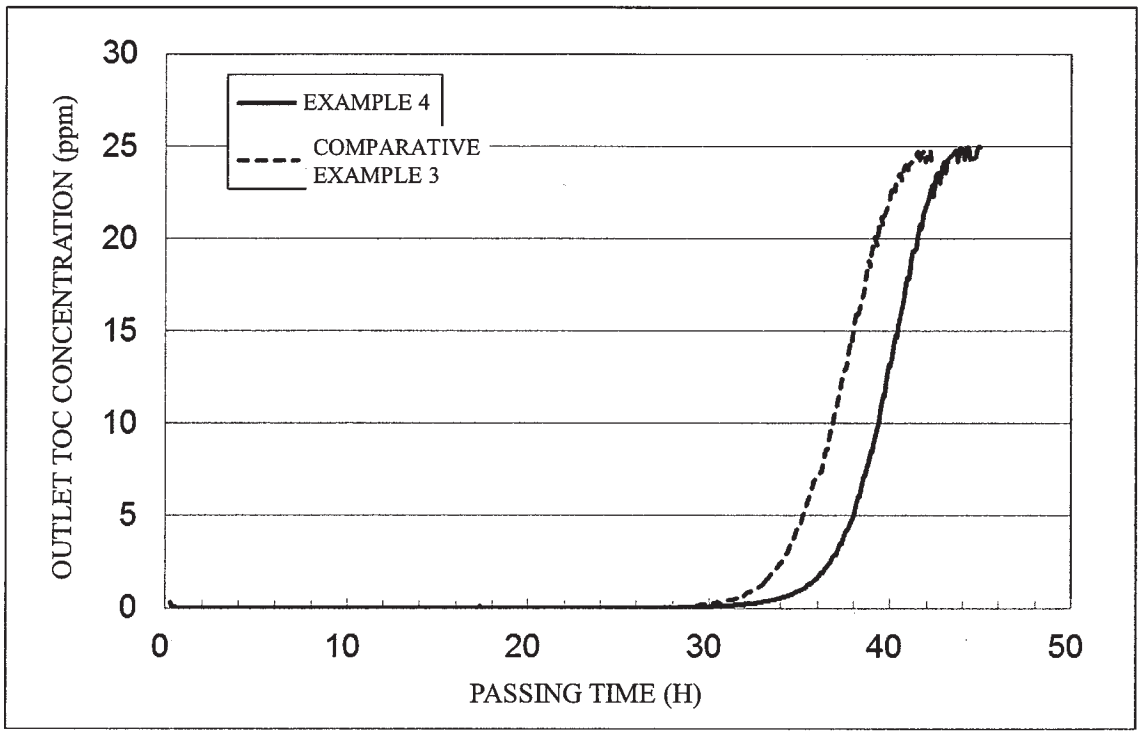
30
25
20
15
10
5
0
OUTLET TOC CONCENTRATION (ppm)
EXAMPLE 4
COMPARATIVE EXAMPLE 3
0
10
20
30
40
50
PASSING TIME (H)