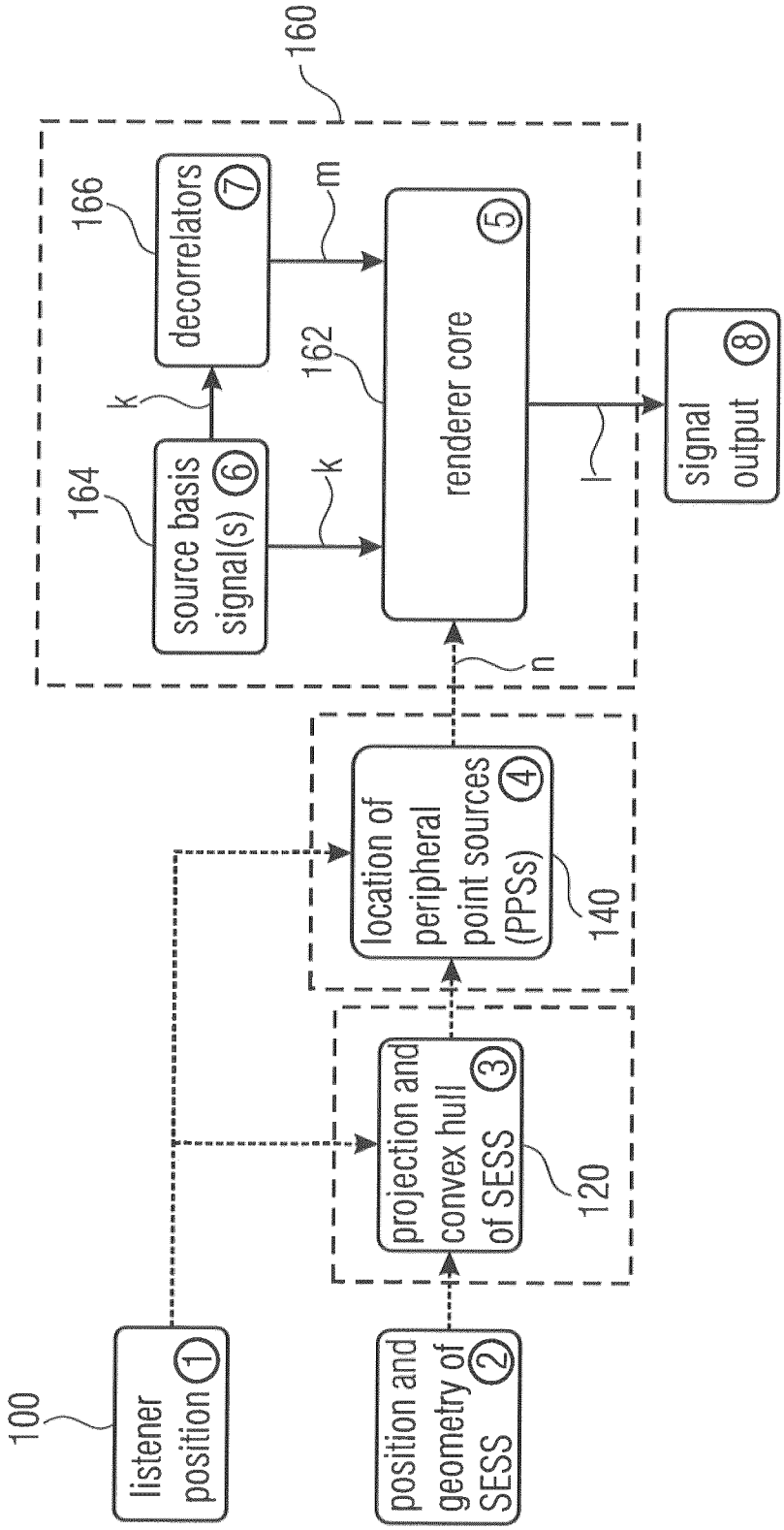
100
listener position ①
position and geometry of SESS ②
projection and convex hull of SESS ③
120
location of peripheral point sources (PPSs) ④
140
160
166
decorrelators ⑦
m
164
source basis signal(s) ⑥
k
k
162
renderer core ⑤
n
signal output ⑧

Fig. 1

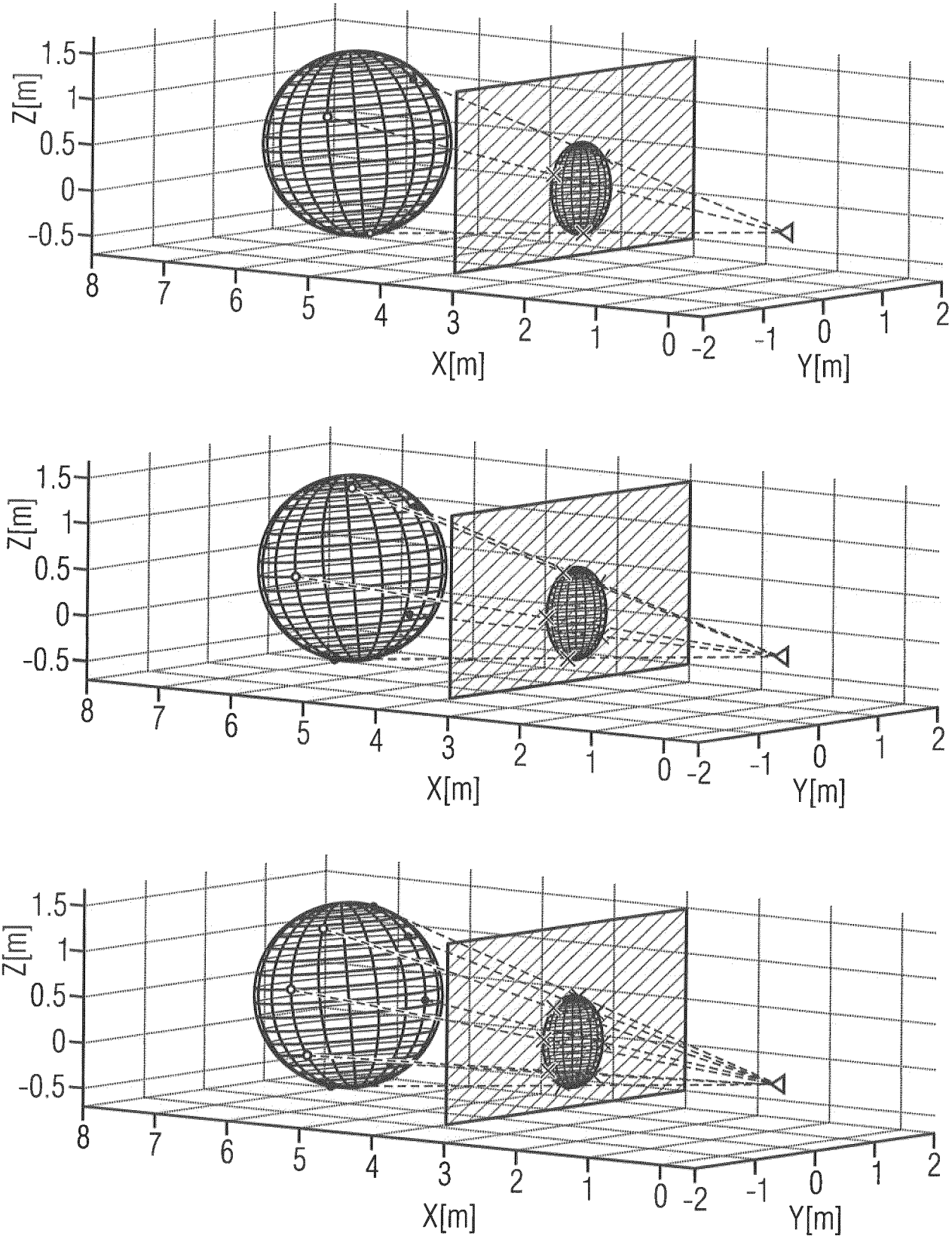

Spherical SESS with different numbers (i.e., 3 (top), 5 (middle), and 8 (bottom)) of PPSs uninformly distributed on the convex hull.

Fig. 2

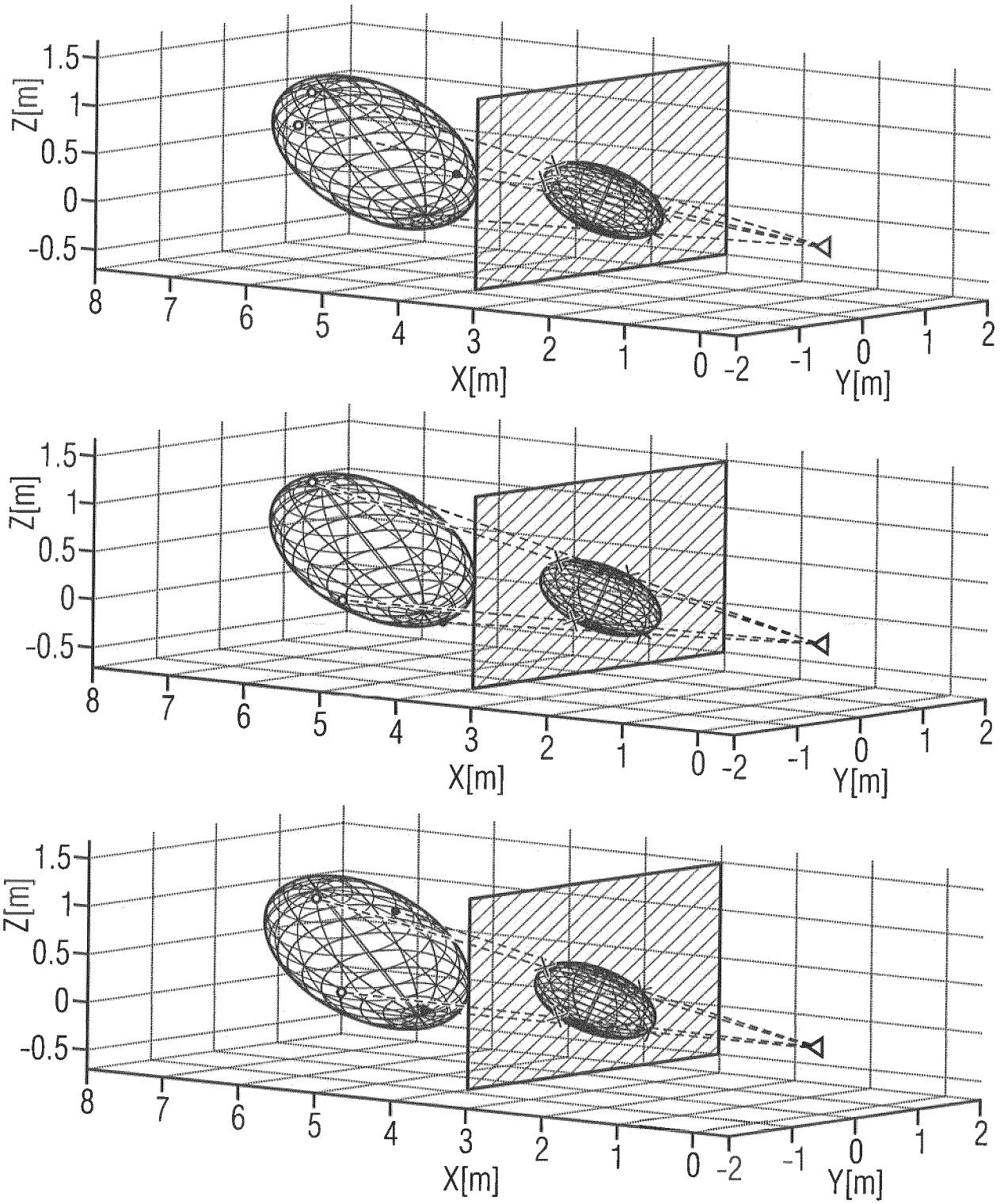

Ellipsoid SESS with four PPPs under three different methods of determining the location of the PPSs: a/top) horizontal and vertical extremal points; b/middle) uninformly distributed points on the convex hull; c/bottom) uninformly distributed points on a shrunk convex hull.

Fig. 3

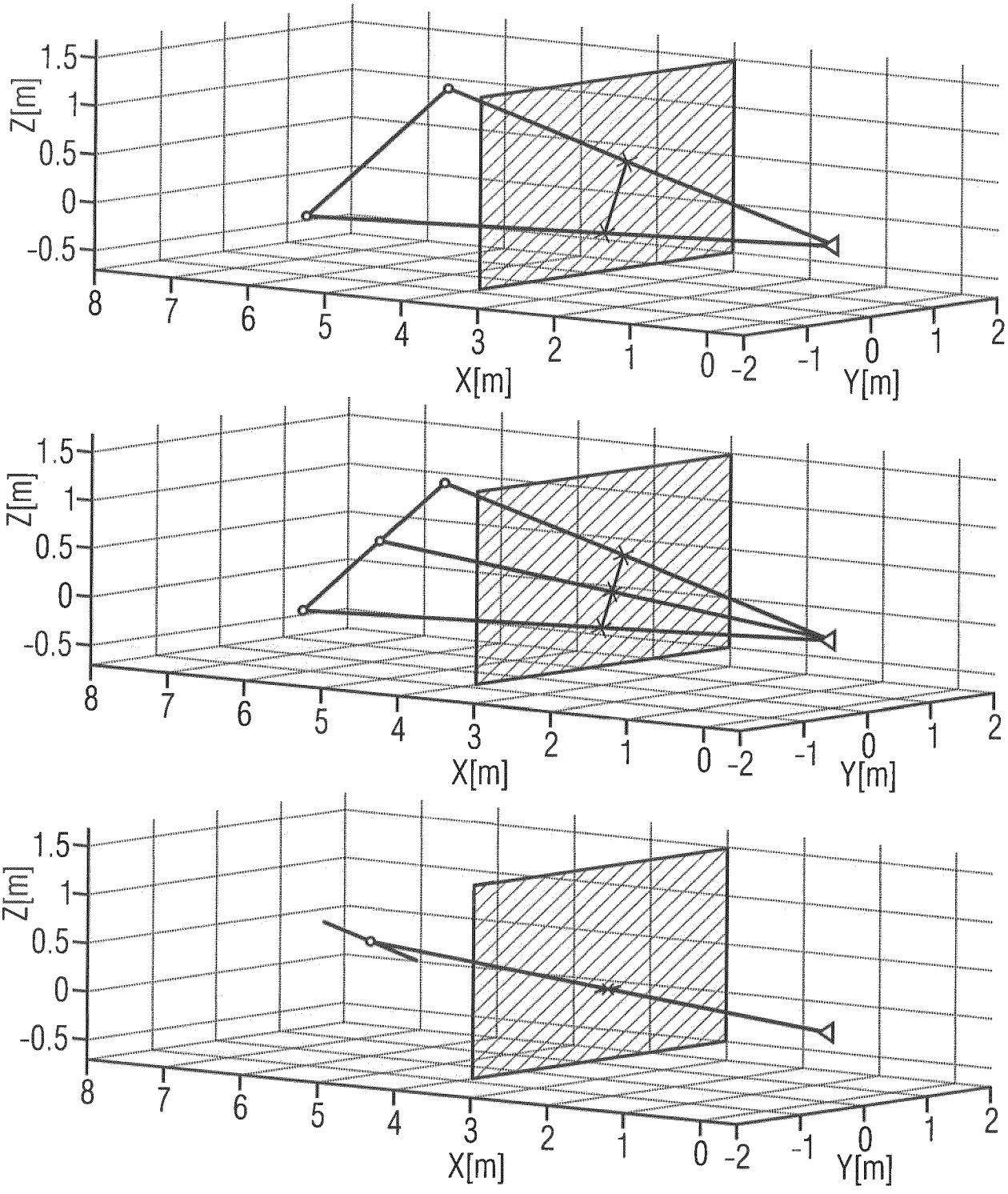

Line SESS with three different methods to distribute the location of the PPSs: a/top) two extremal points on the projected convex hull; b/middle) two extremal points on the projected convex hull with an additional point source in the center of the line; c/bottom) one PPSs in the center of the convex as the projected convex hull of the rotated line is too small to allow more than one PPSs.

Fig. 4

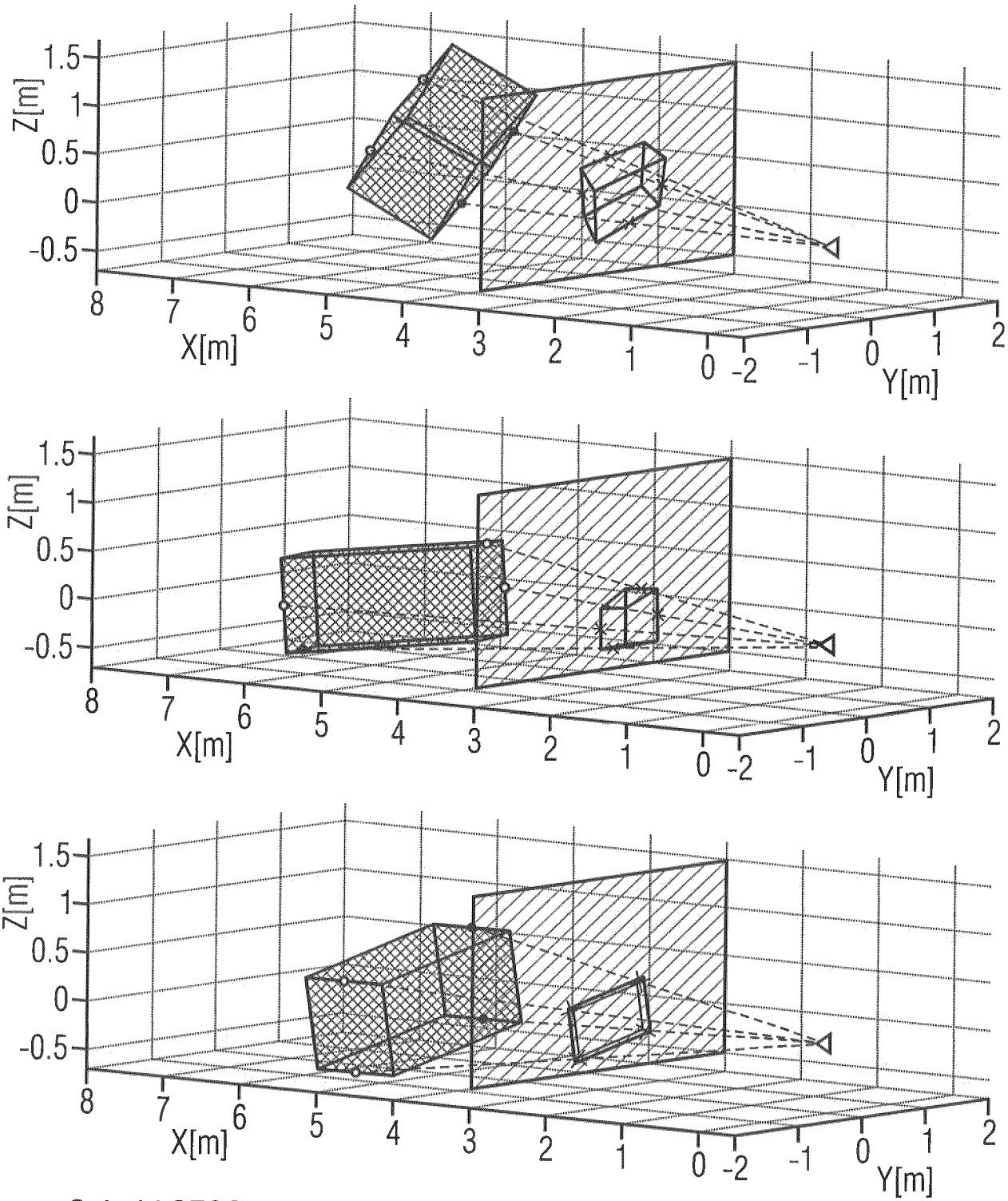

Cuboid SESS with three different methods to distribute the PPSs: a/top) two PPSs on the horizontal axis and two PPSs on the vertical axis; b/middle) two PPSs on the horizontal extremal points of the projected convex hull and two PPSs on the vertical extremal points of the projected convex hull; c/bottom) back projekted PPSs distances are chosen to be equal to the distance of the center of gravity of the SESS geometry

Fig. 5

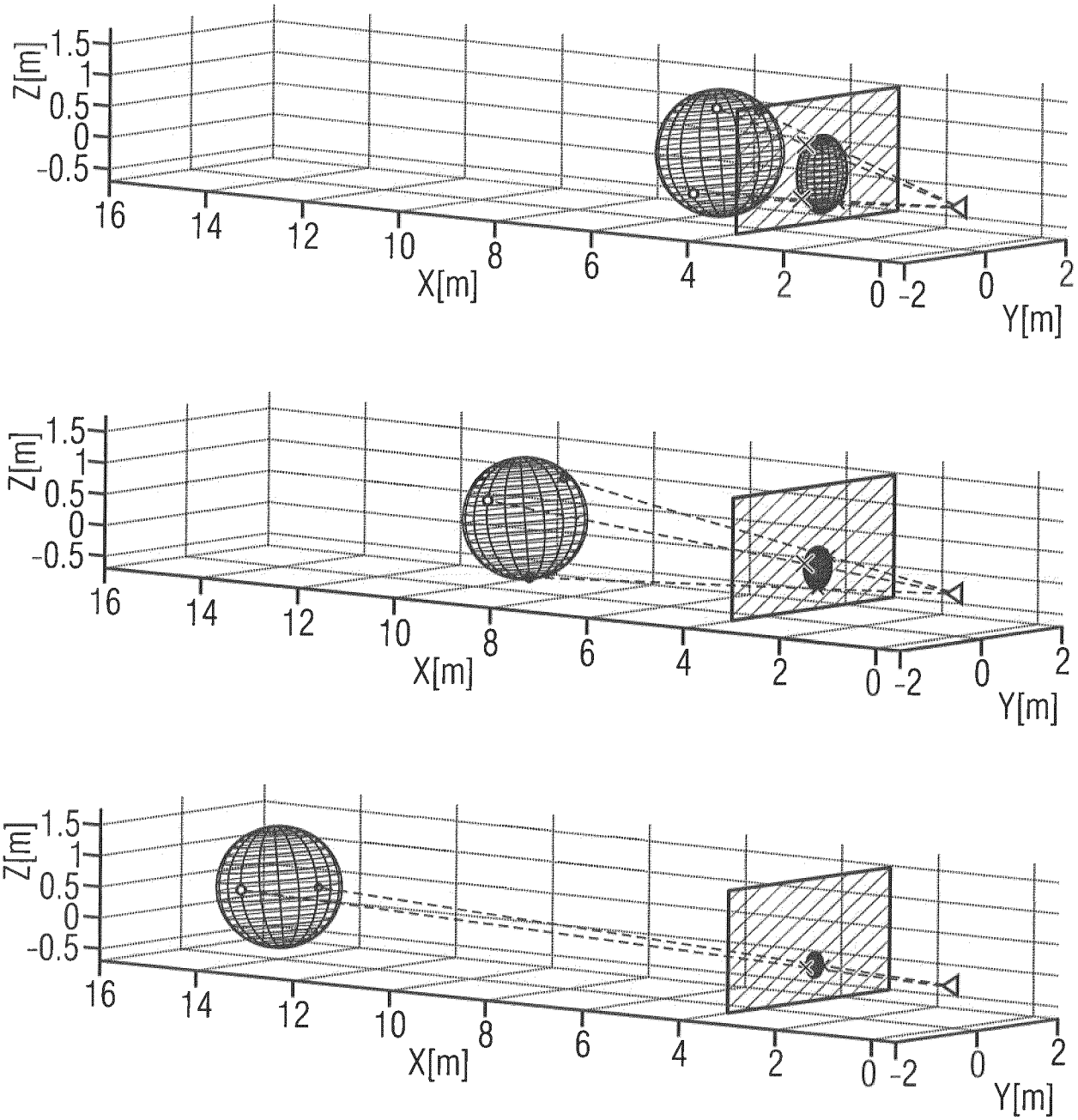

Spherical SESS of equal size but at different distances: a/top) close distance with four PPSs distributed uninformly on the projected convex hull; b/middle) middle distance with three PPSs distributed uninformly on the projected convex hull; c/bottom) far distance with two PPSs distributed uninformly on the projected convex hull

Fig. 6

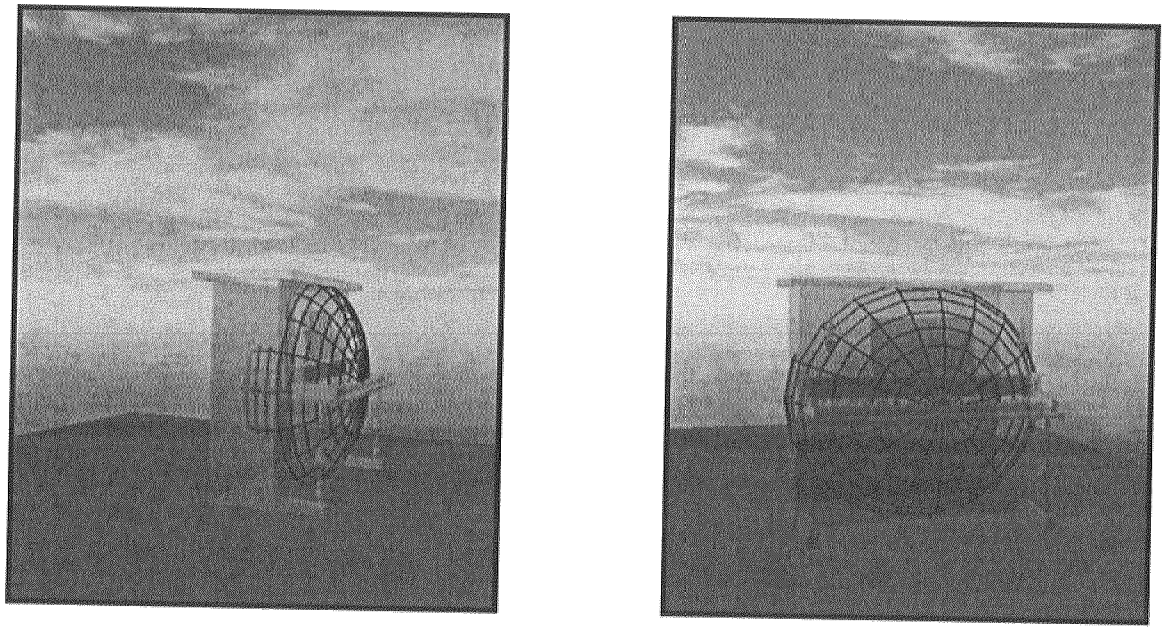

Piano-shaped SESS (depicted in green) with an approximative parametric ellipsoid shape (indicated as a red mesh)

Fig. 7

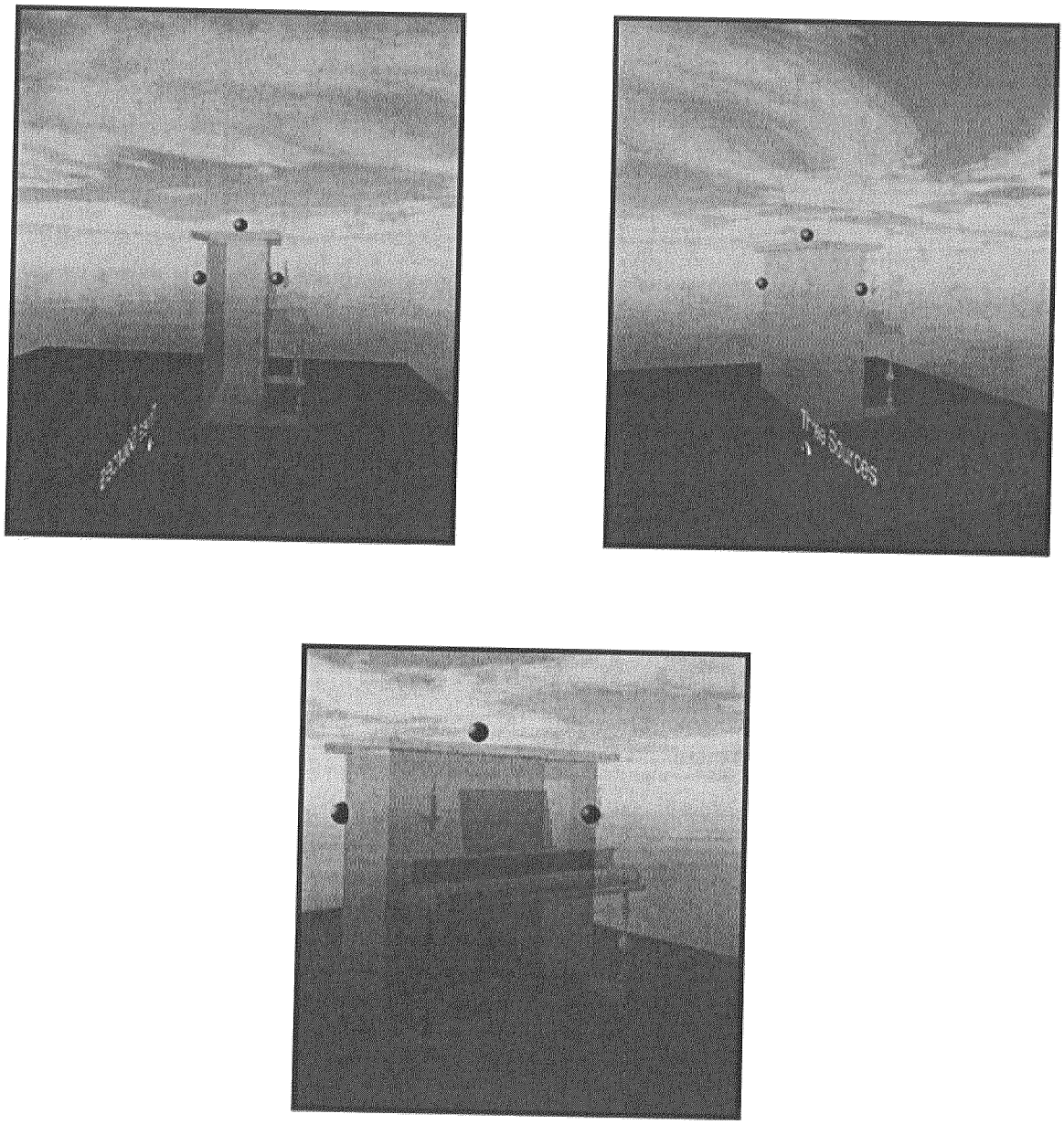

Piano-shaped SESS with three PPSs distributed on the vertical extremal points of the projected convex hull and the vertical top position of the projected convex hull. Note that for better visualization, the PPSs are placed on a stretched projected convex hull

Fig. 8

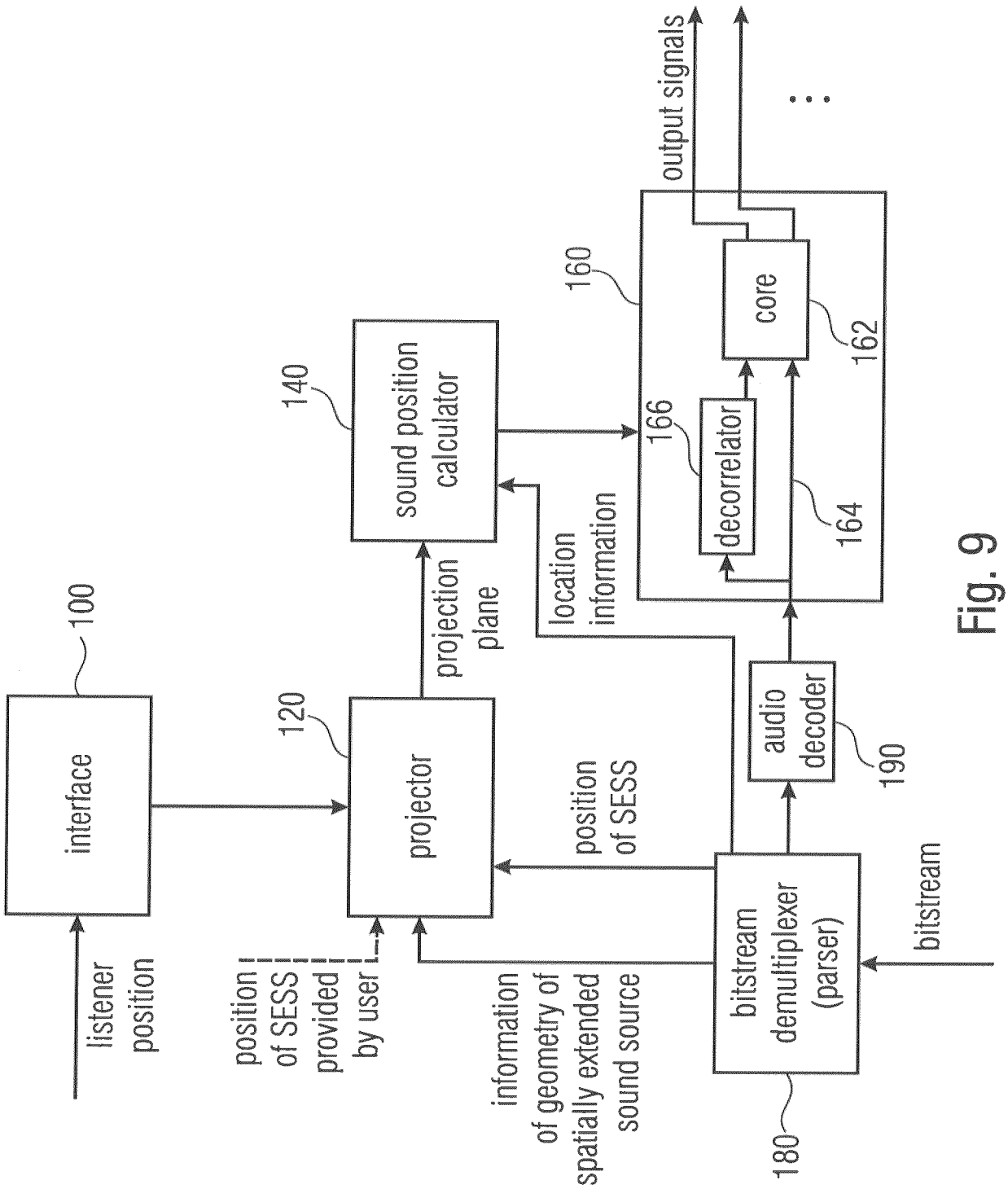
listener position
interface
100
position of SESS provided by user
projector
120
information of geometry of spatially extended sound source
projection plane
sound position calculator
140
position of SESS
location information
bitstream demultiplexer (parser)
180
bitstream
audio decoder
190
160
166
decorrelator
164
core
162
output signals
...

Fig. 9

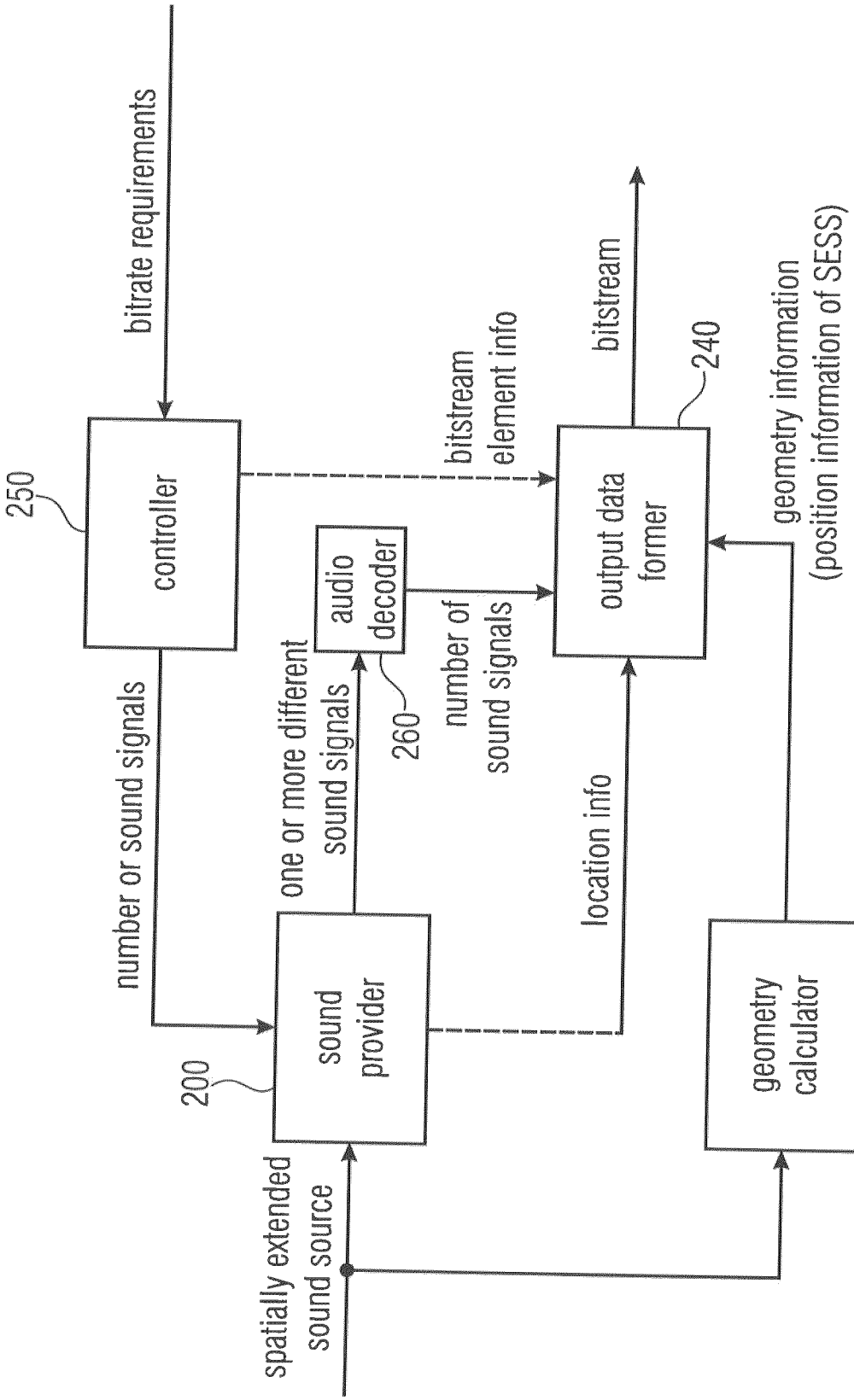
bitrate requirements
250
controller
bitstream element info
bitstream
240
output data former
audio decoder
260
number of sound signals
one or more different sound signals
number or sound signals
location info
geometry information (position information of SESS)
200
sound provider
geometry calculator
220
spatially extended sound source

Fig. 10

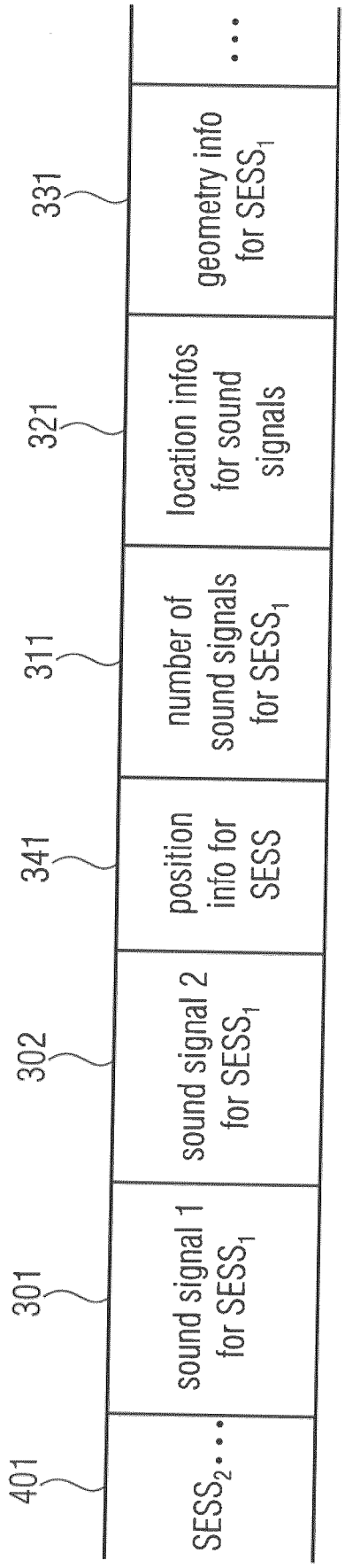
401
SESS2 . . .
301
sound signal 1 for SESS1
302
sound signal 2 for SESS1
341
position info for SESS
311
number of sound signals for SESS1
321
location infos for sound signals
331
geometry info for SESS1
. . .

Fig. 11