(a)

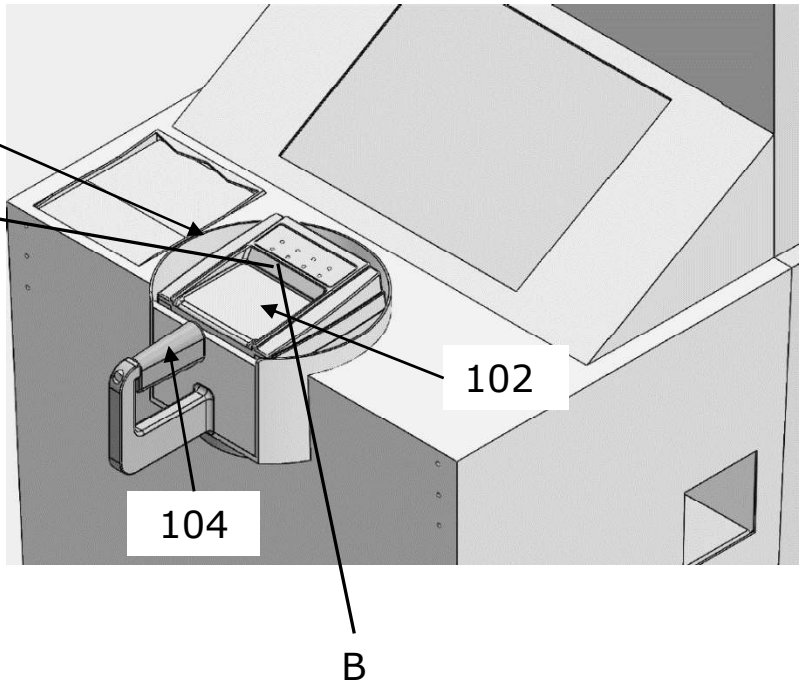

(b)

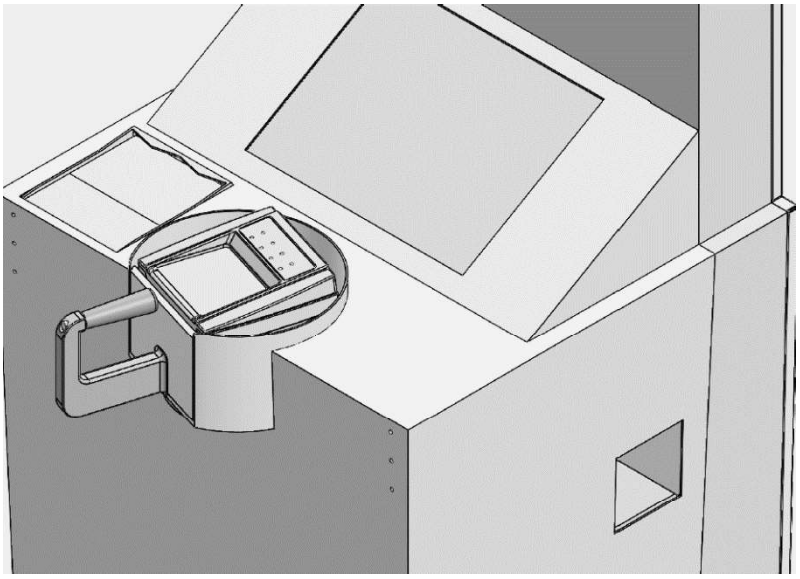

(c)

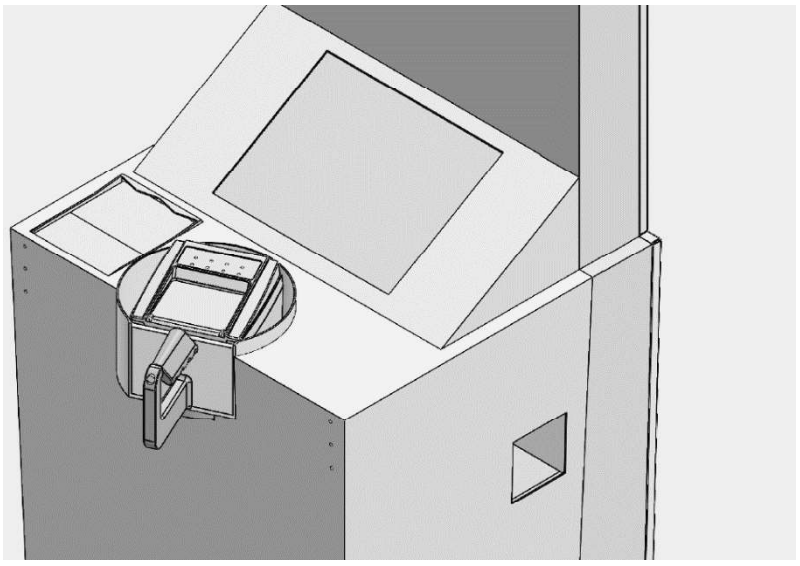

Figure 1

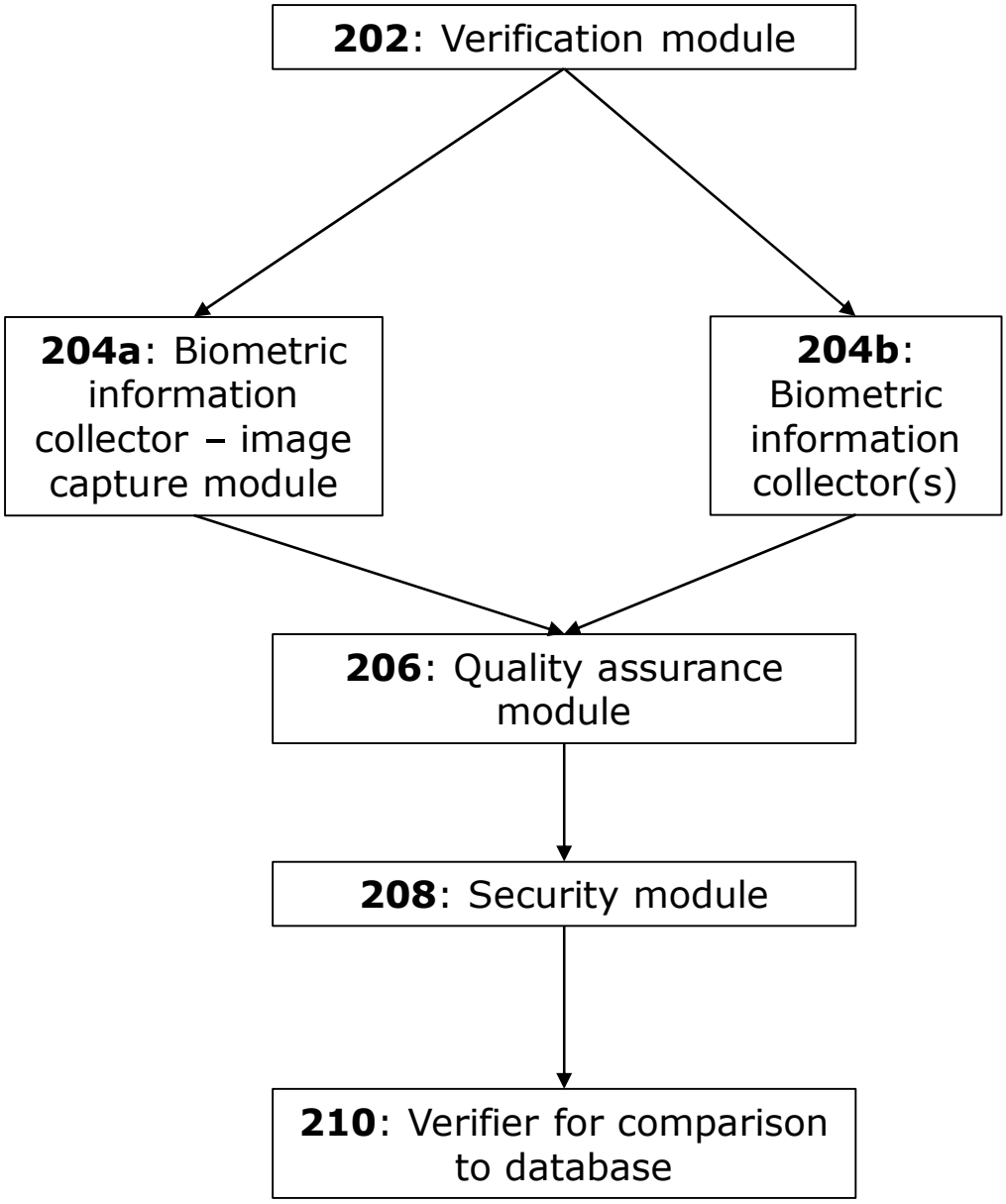
202: Verification module
204a: Biometric information collector – image capture module
204b: Biometric information collector(s)
206: Quality assurance module
208: Security module
210: Verifier for comparison to database

Figure 2

(a)

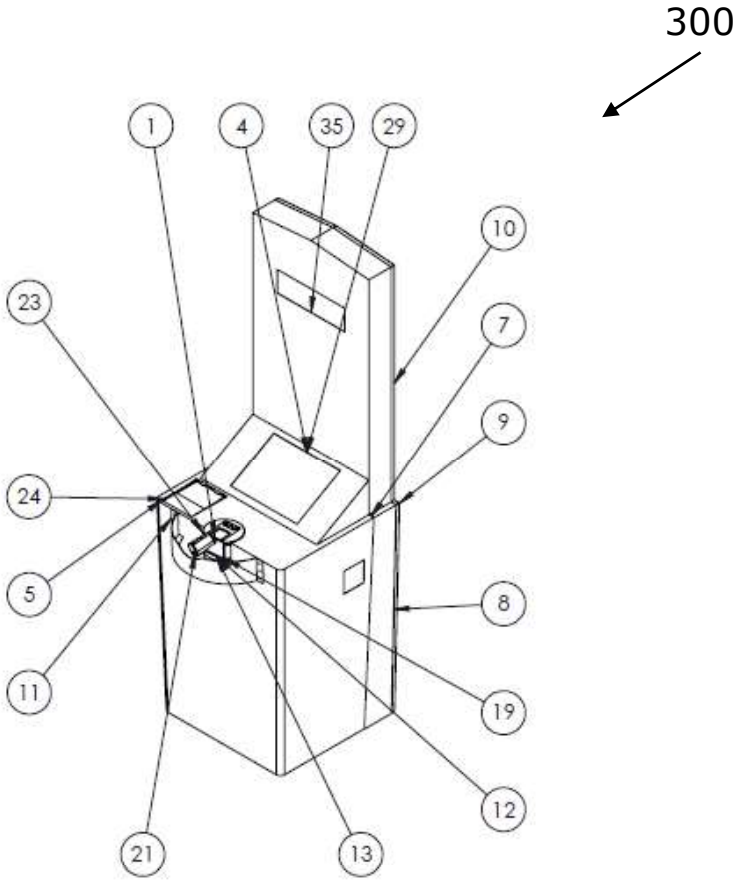

(b)

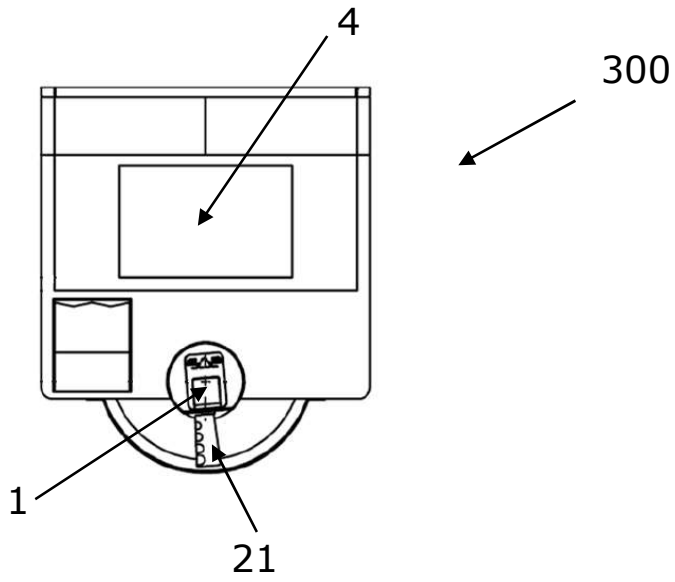

Figure 3