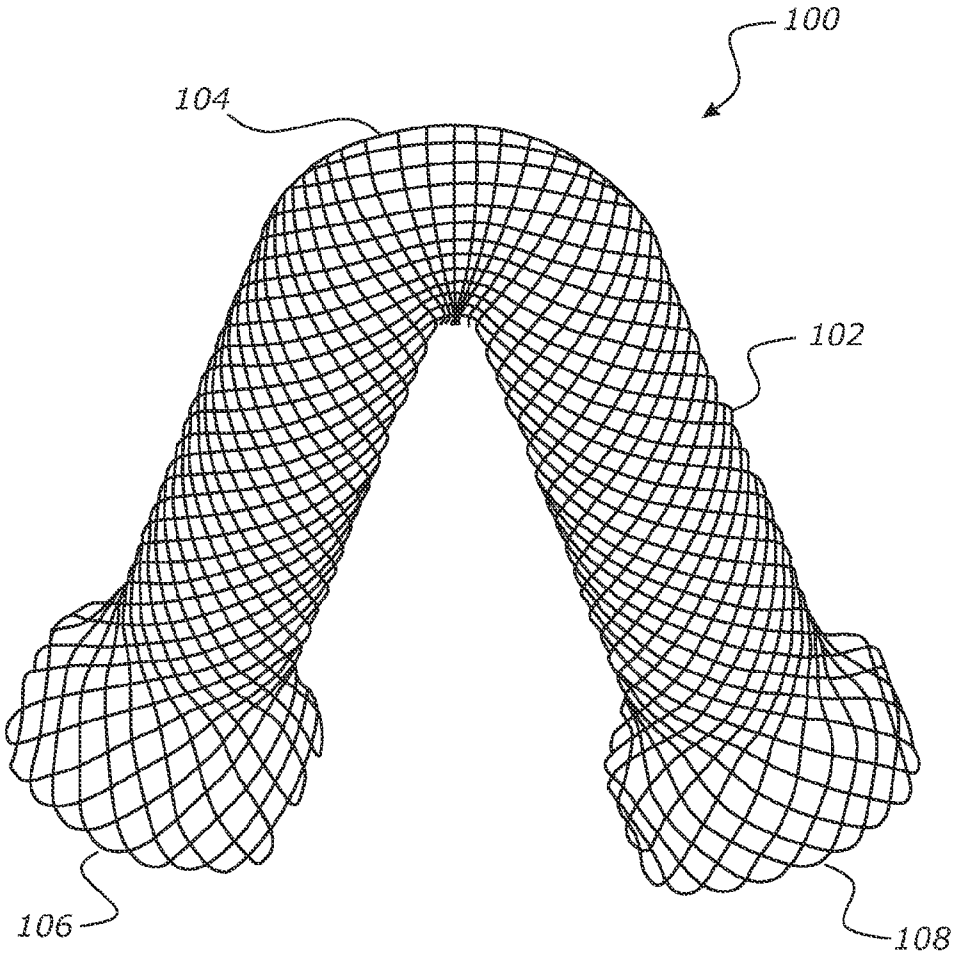


*FIGURE 1*

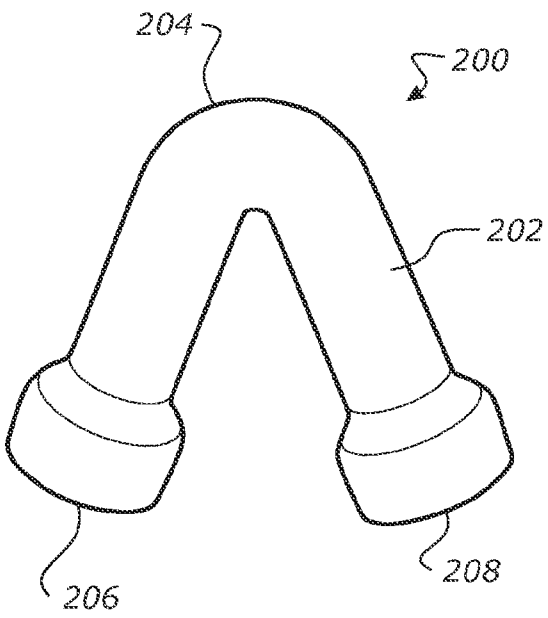


FIGURE 2A

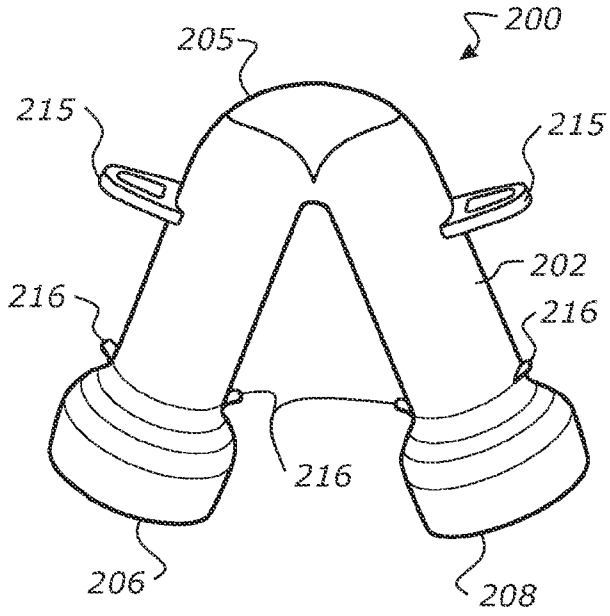


FIGURE 2B

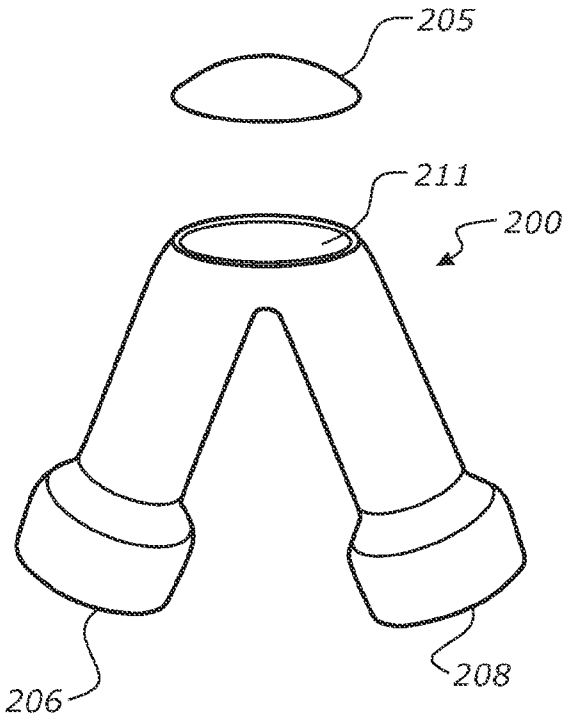


FIGURE 2C

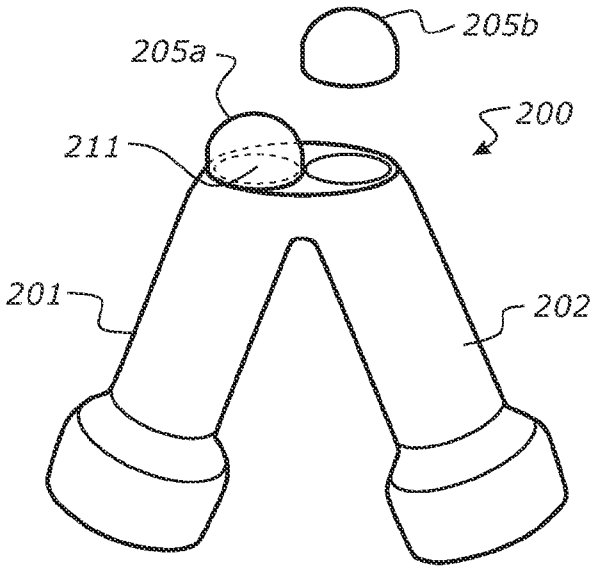


FIGURE 2D

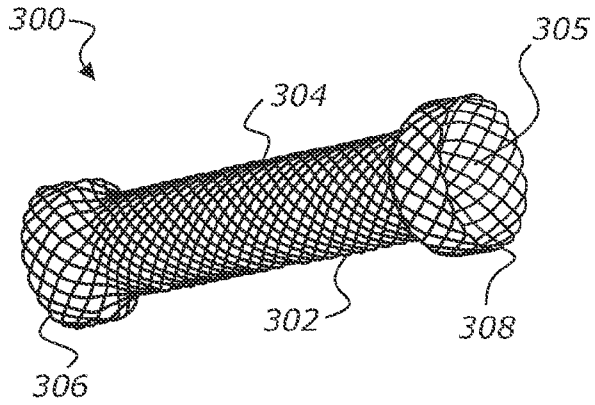


FIGURE 3

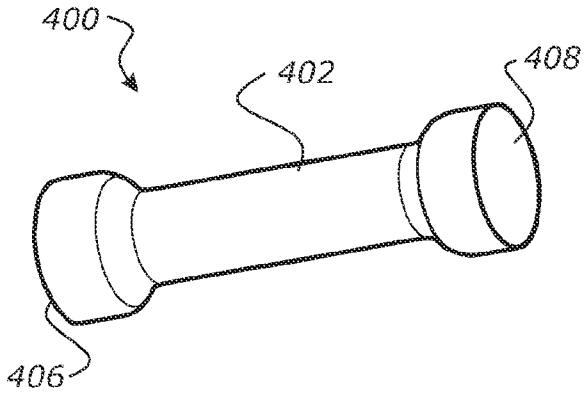


FIGURE 4

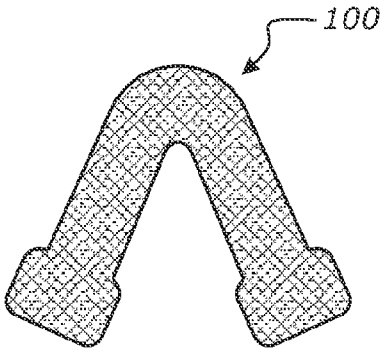


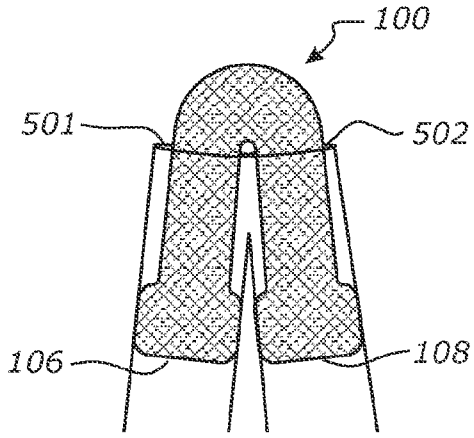


FIGURE 5A

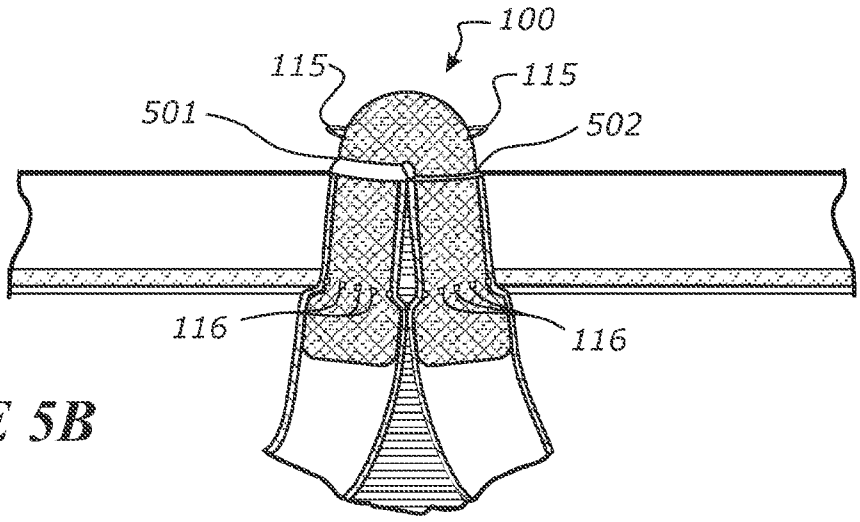


FIGURE 5B

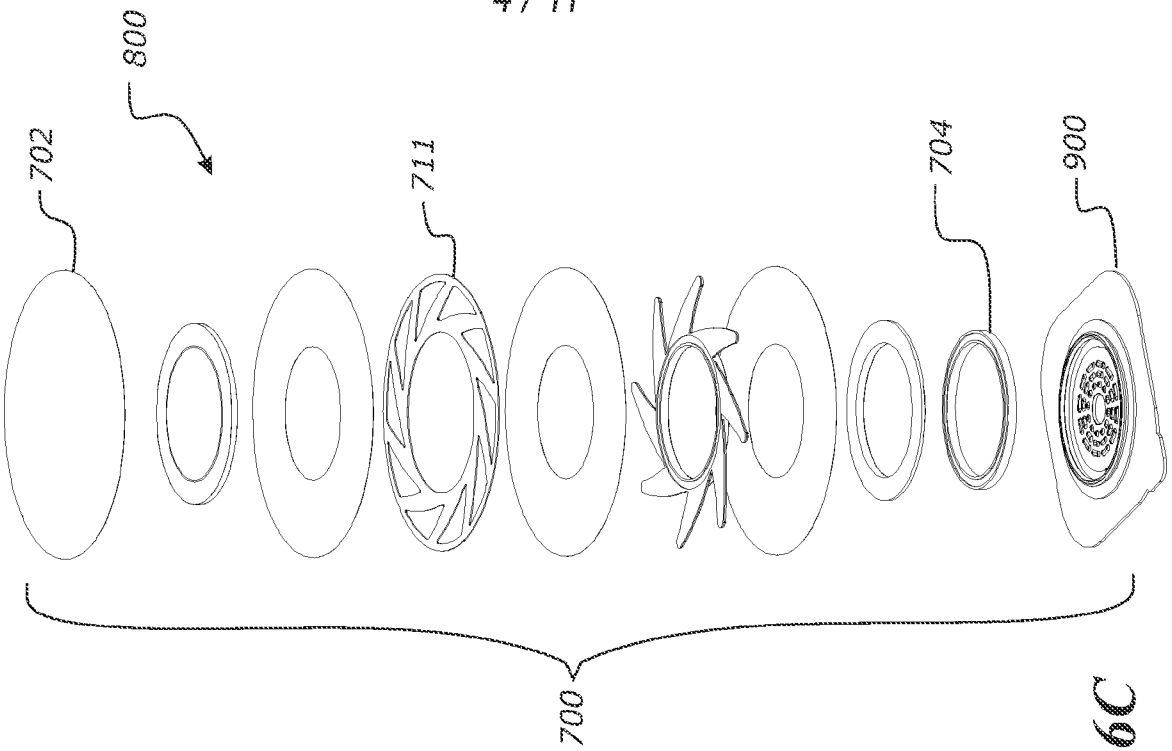


FIGURE 6C

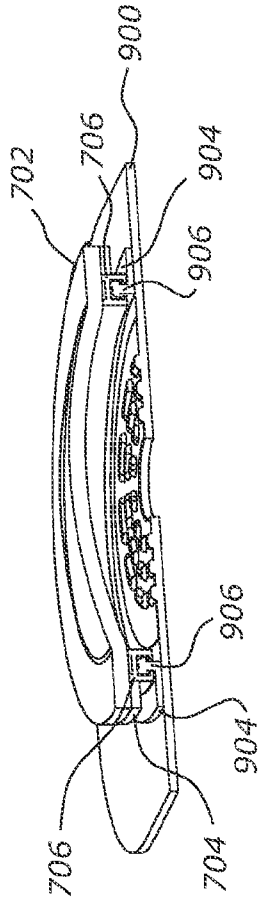


FIGURE 6A

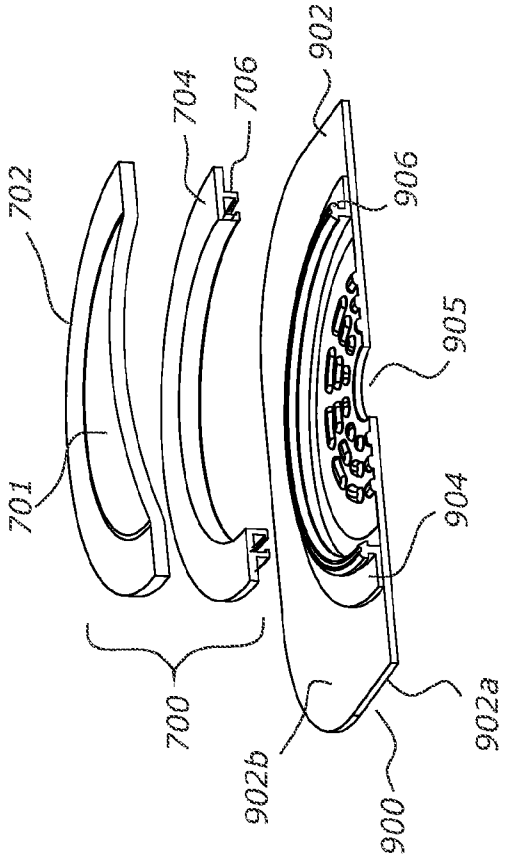


FIGURE 6B

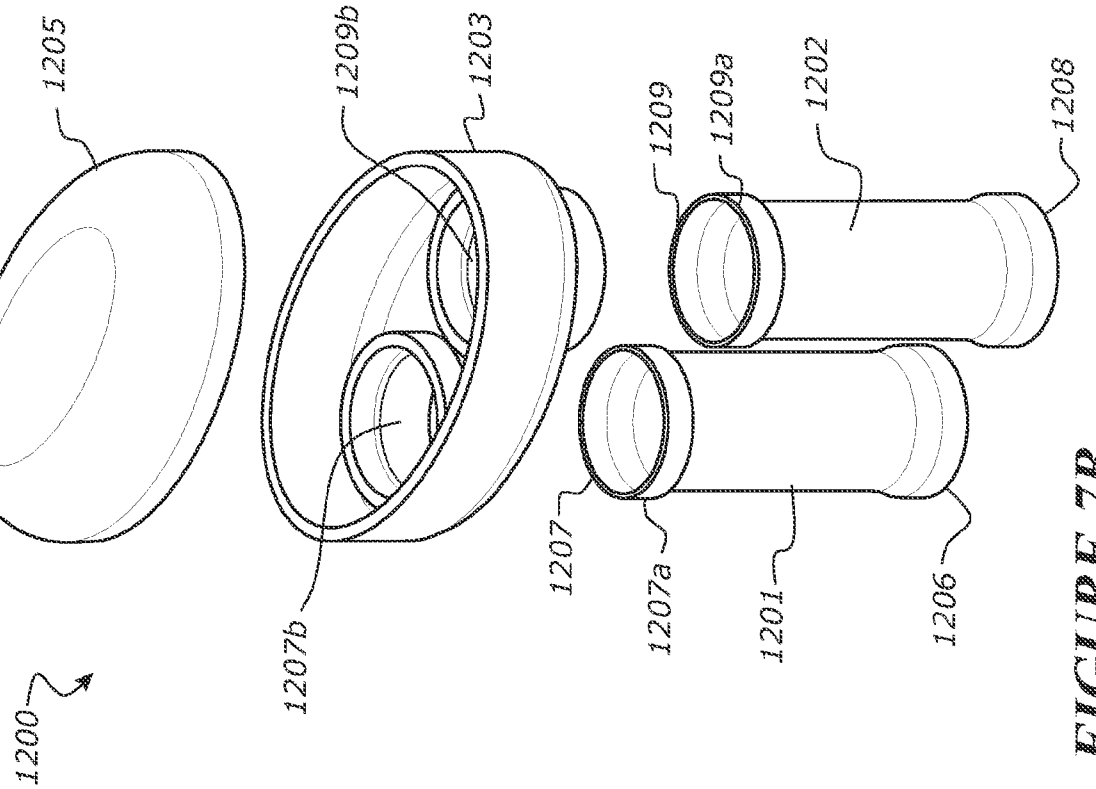


FIGURE 7B

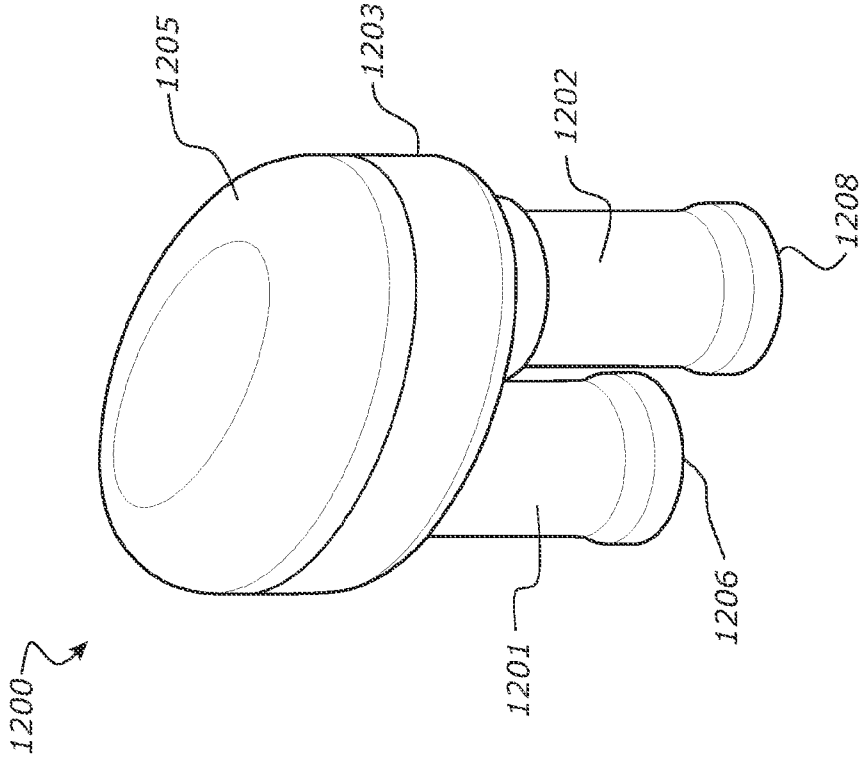


FIGURE 7A

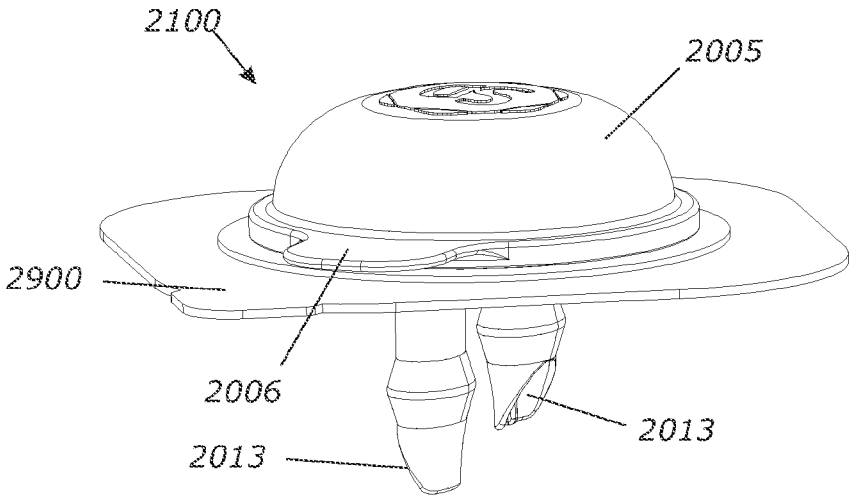


FIGURE 8

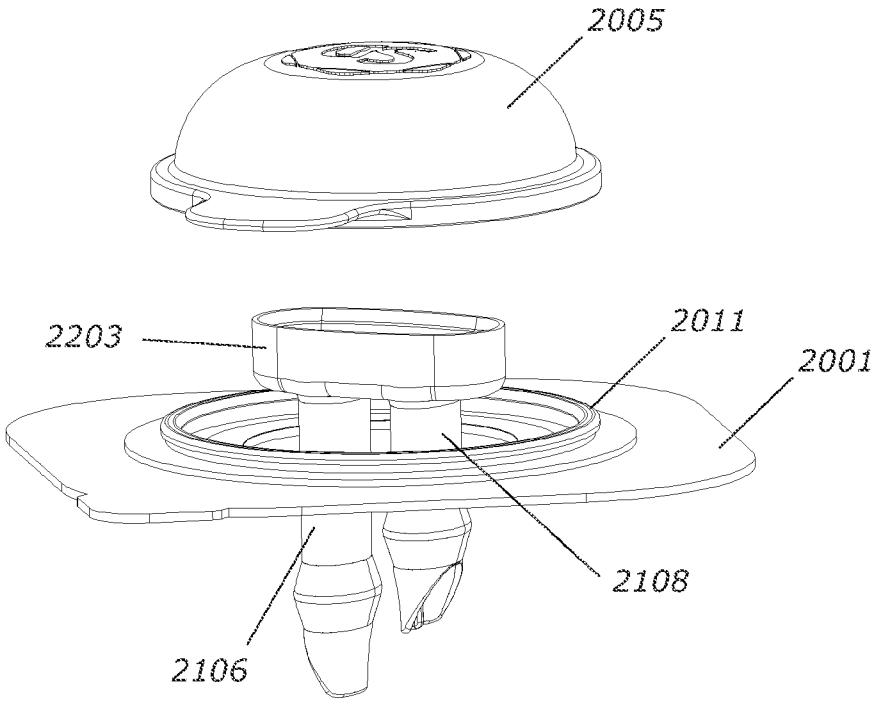


FIGURE 9

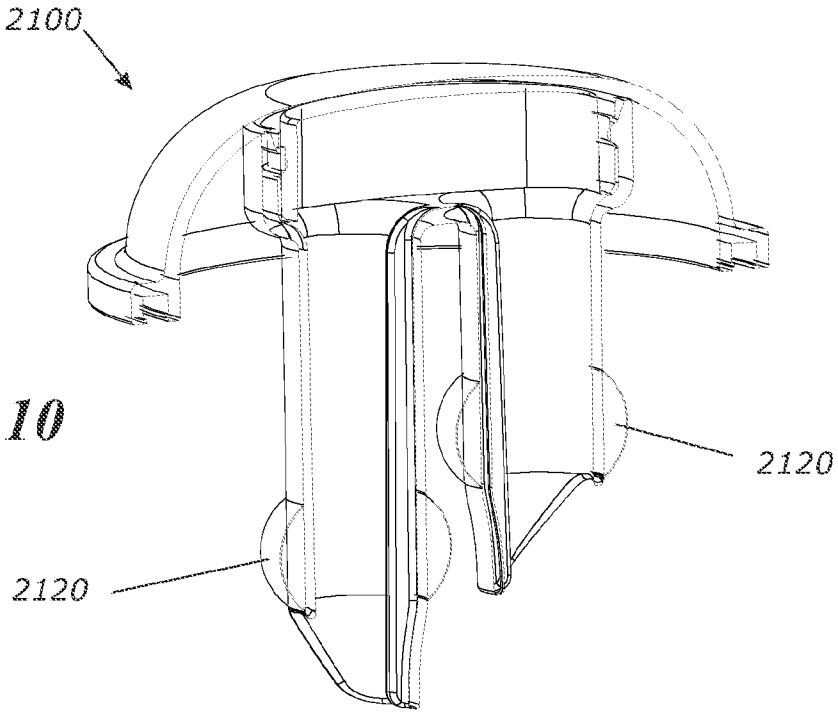


FIGURE 10

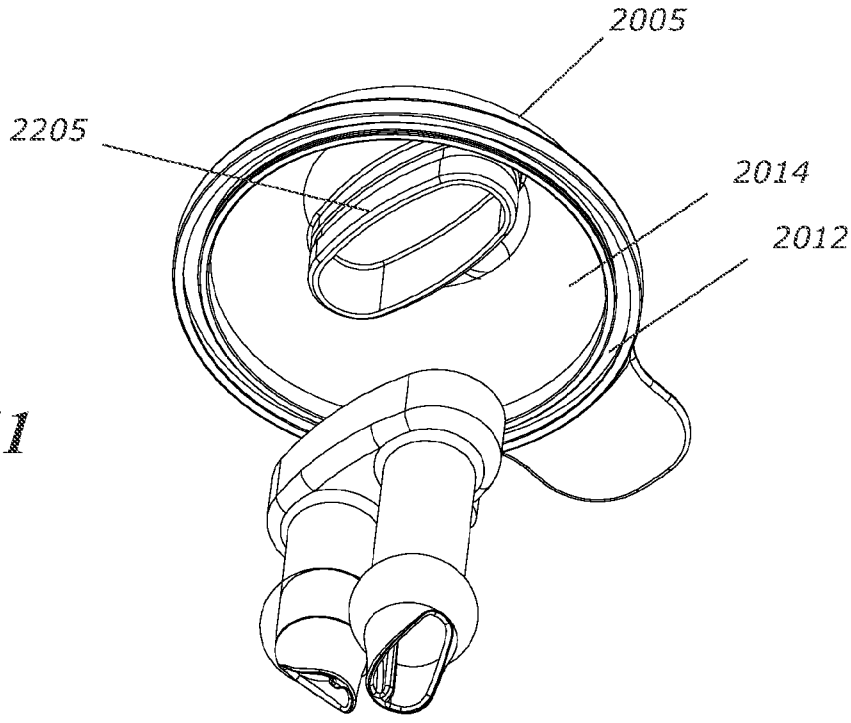


FIGURE 11

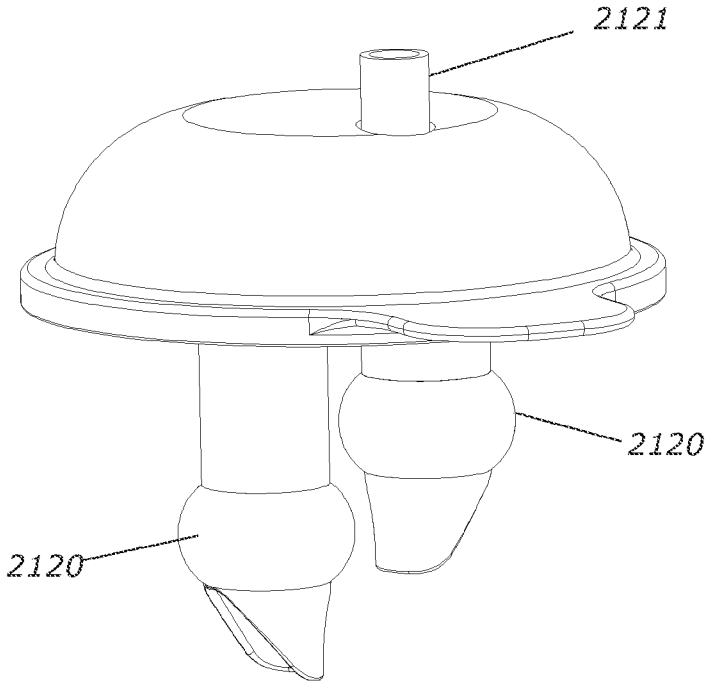


FIGURE 12

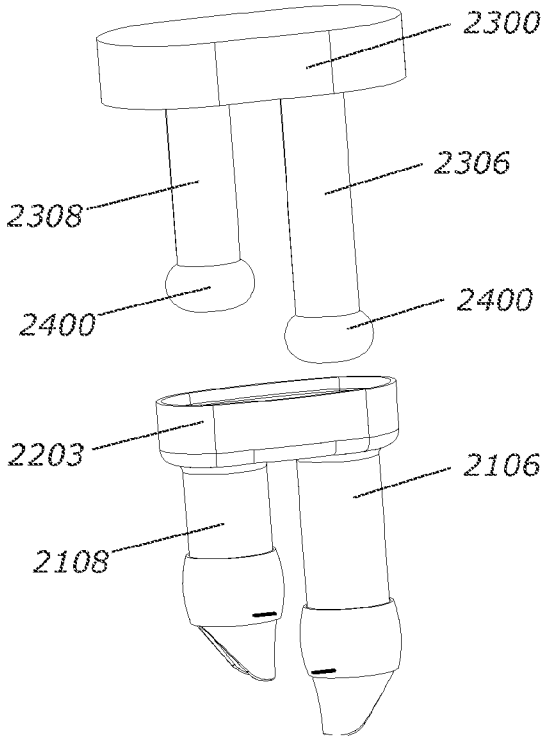


FIGURE 13

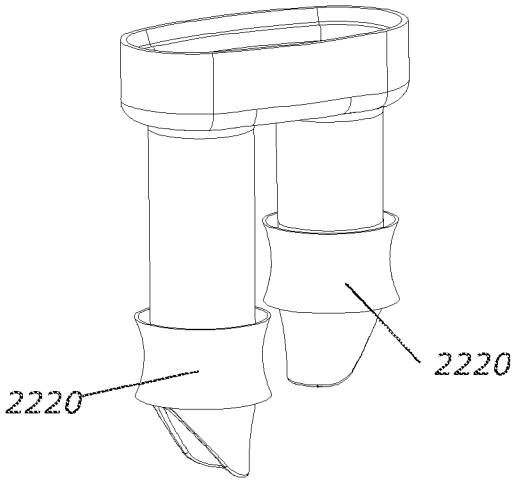


FIGURE 14

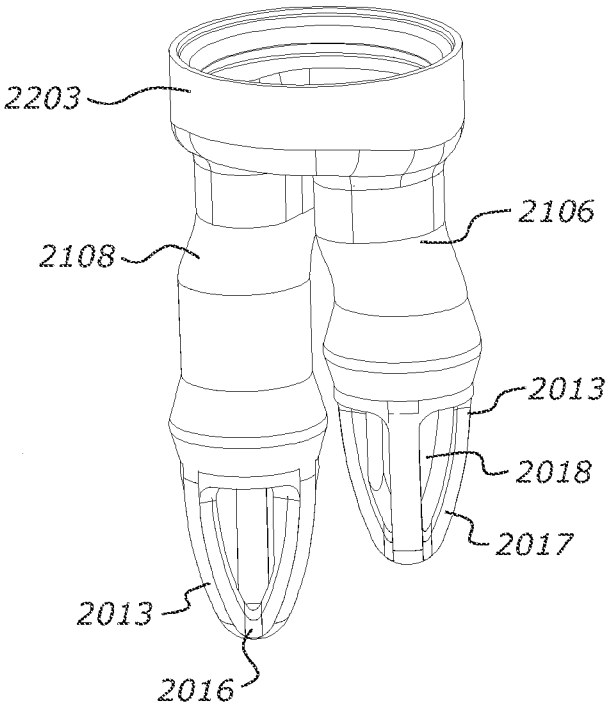


FIGURE 15

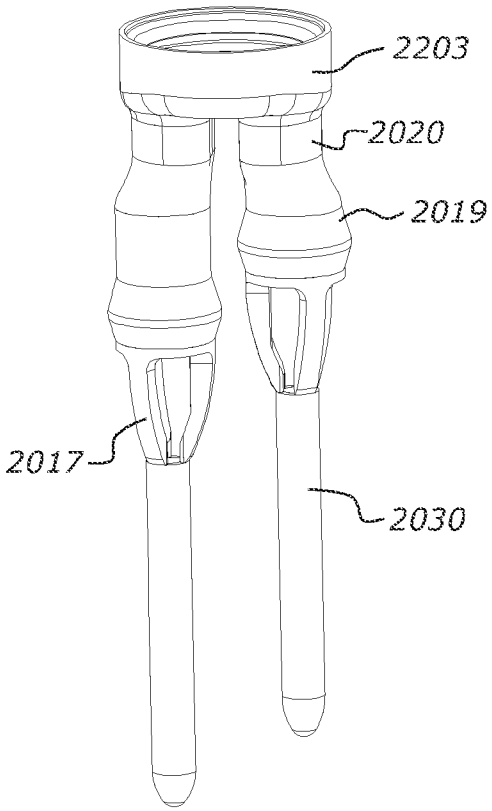


FIGURE 16

FIGURE 17

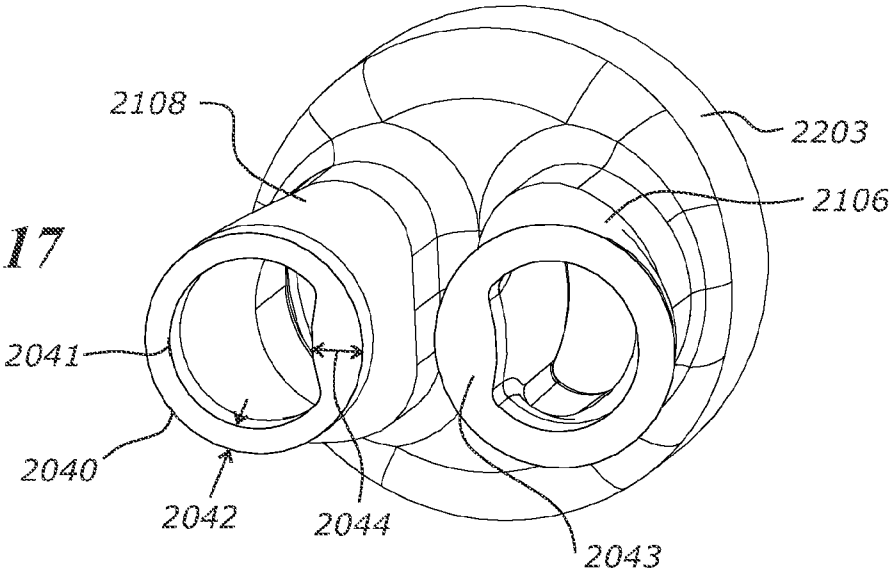

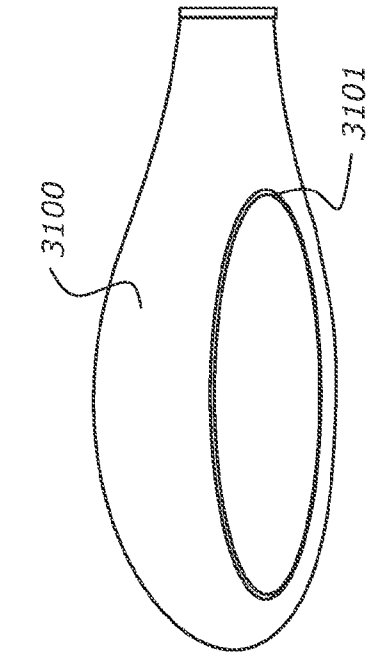


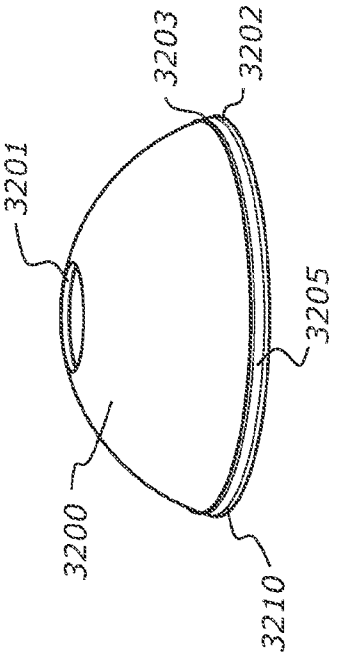


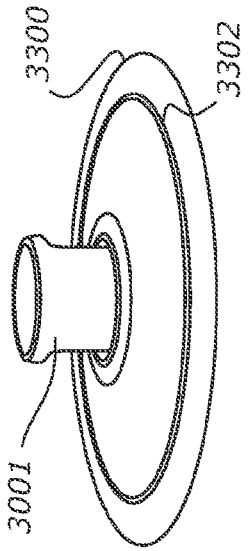


FIGURE 20

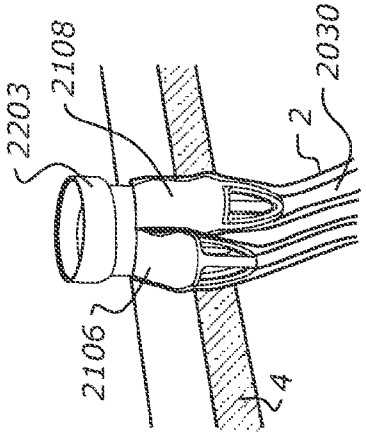


FIGURE 18B

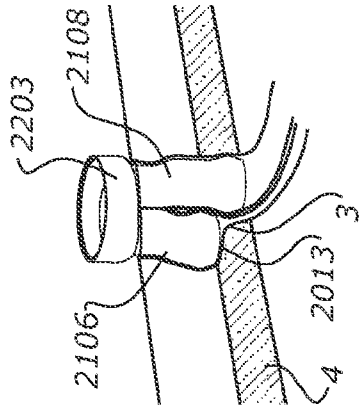


FIGURE 18A

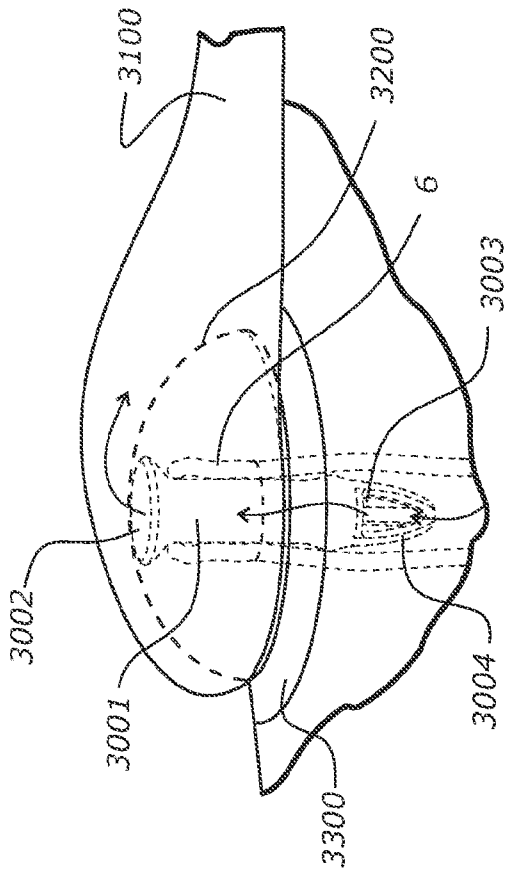


FIGURE 19

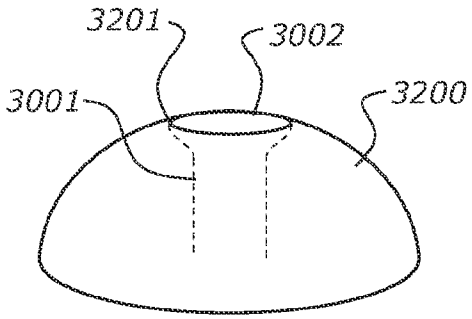


FIGURE 21A

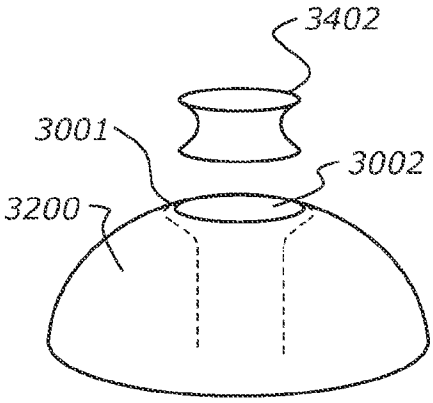


FIGURE 21B

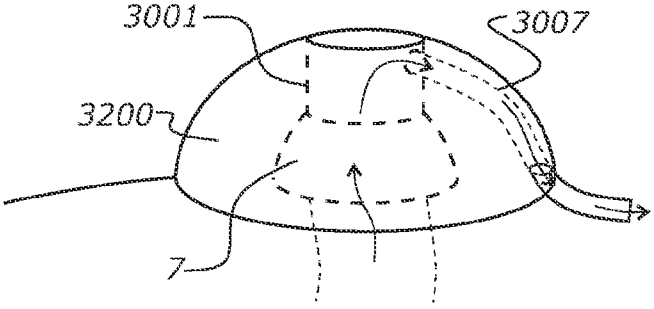


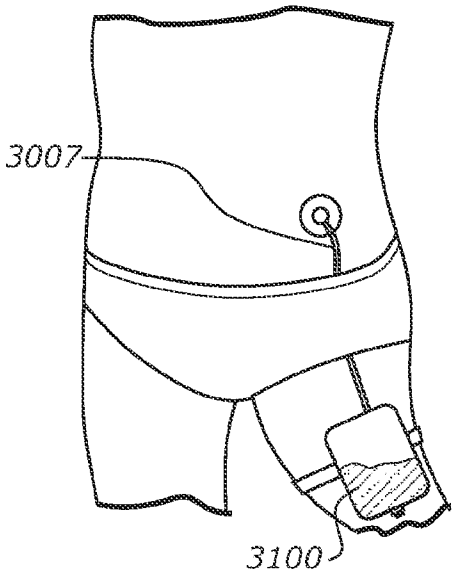


FIGURE 21C

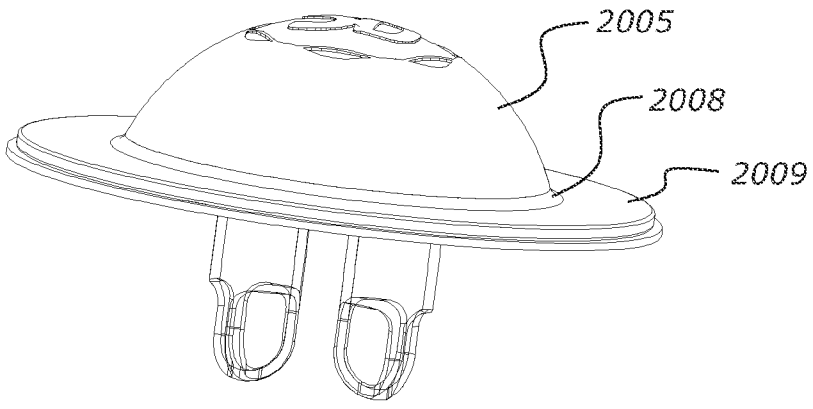


FIGURE 22