FIG. 1

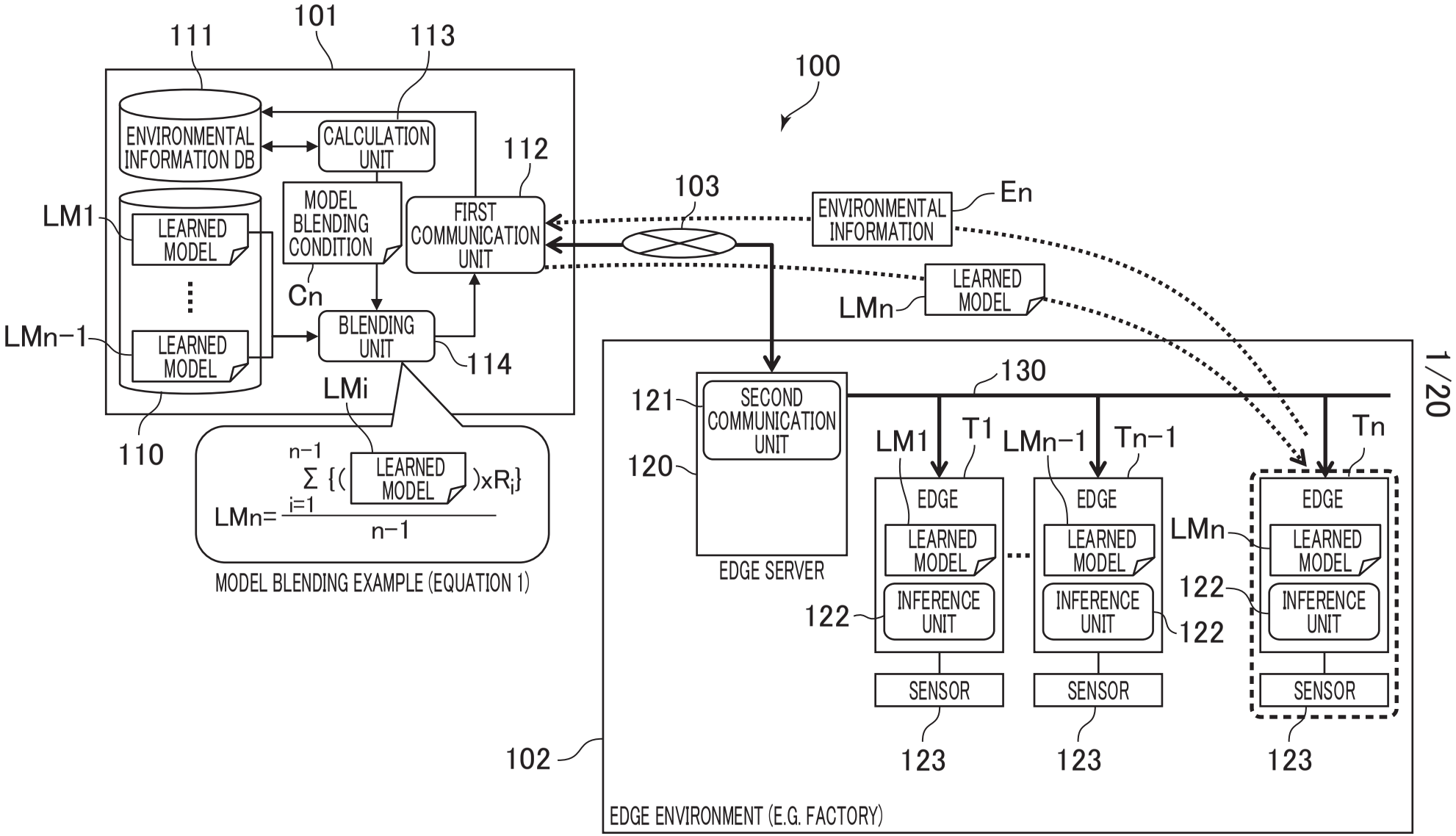
100
101
111
113
112
103
ENVIRONMENTAL INFORMATION DB
CALCULATION UNIT
MODEL BLENDING CONDITION
FIRST COMMUNICATION UNIT
LM1
LEARNED MODEL
LMn−1
LEARNED MODEL
Cn
BLENDING UNIT
114
LMi
110
LMn= Σ {(LEARNED MODEL)xRi} / n−1
MODEL BLENDING EXAMPLE (EQUATION 1)
ENVIRONMENTAL INFORMATION
En
LEARNED MODEL
LMn
121
SECOND COMMUNICATION UNIT
120
EDGE SERVER
130
LM1
T1
LMn−1
Tn−1
Tn
EDGE
LEARNED MODEL
INFERENCE UNIT
122
SENSOR
123
102
EDGE ENVIRONMENT (E.G. FACTORY)

FIG. 2

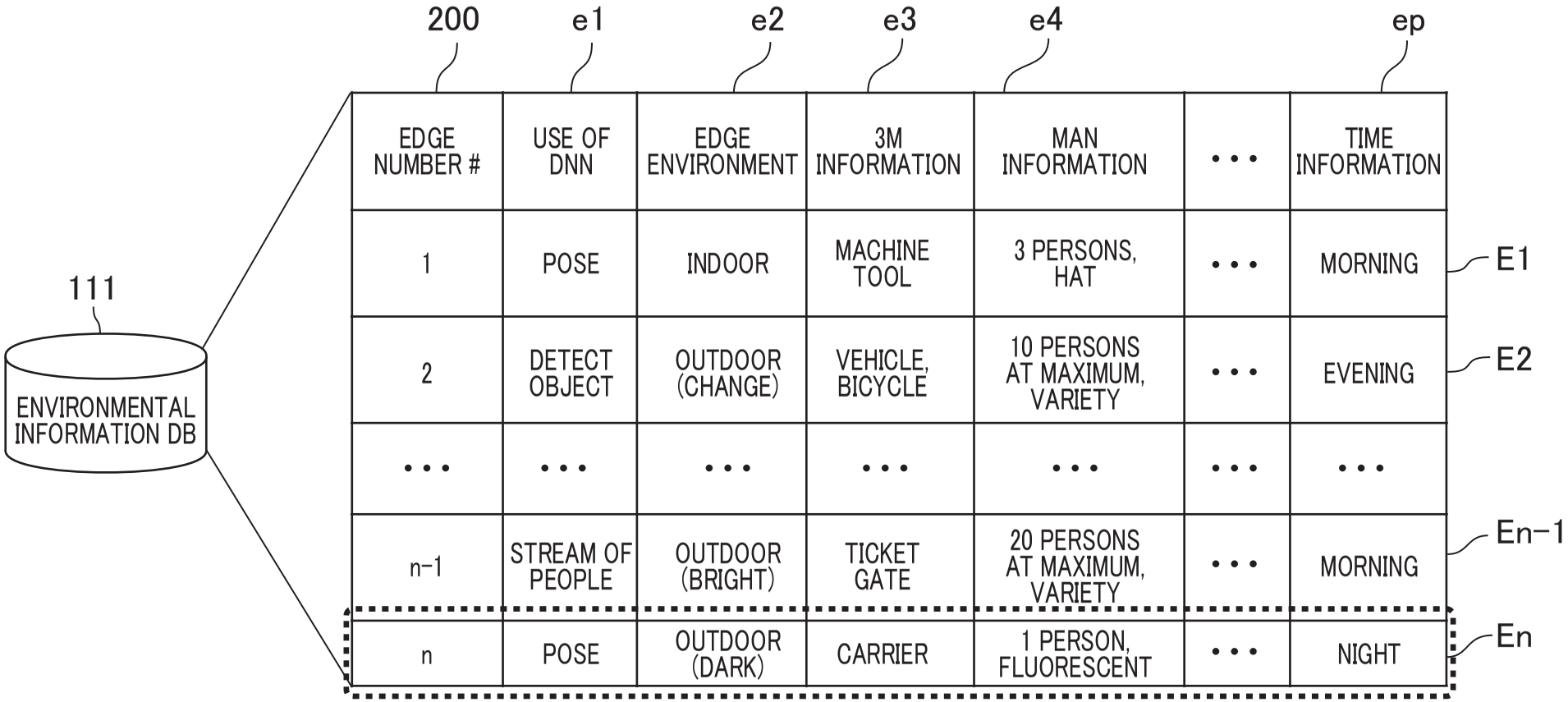

EDGE NUMBER #	USE OF DNN	EDGE ENVIRONMENT	3M INFORMATION	MAN INFORMATION	・・・	TIME INFORMATION
1	POSE	INDOOR	MACHINE TOOL	3 PERSONS, HAT	・・・	MORNING
2	DETECT OBJECT	OUTDOOR (CHANGE)	VEHICLE, BICYCLE	10 PERSONS AT MAXIMUM, VARIETY	・・・	EVENING
・・・	・・・	・・・	・・・	・・・	・・・	・・・
n−1	STREAM OF PEOPLE	OUTDOOR (BRIGHT)	TICKET GATE	20 PERSONS AT MAXIMUM, VARIETY	・・・	MORNING
n	POSE	OUTDOOR (DARK)	CARRIER	1 PERSON, FLUORESCENT	・・・	NIGHT

FIG. 3

300

200

EDGE INFORMATION / EDGE NUMBER #	e1 USE OF DNN	e2 EDGE ENVIRONMENT	e3 3M INFORMATION	e4 MAN INFORMATION	...	ep TIME INFORMATION	301 MATCHED NUMBER
1	1	0	0	0	...	0	h_1
2	0	0	0	0	...	0	h_2
...	...	...	...	...	...	...	...
i	0	0	1	1	...	0	h_i
...	...	...	...	...	...	...	...
n−1	0	0	0	0	...	0	h_{n-1}

FIG. 4A

Cn

MODEL BLENDING CONDITION

R1	R2	・・・	Ri	・・・	Rn−1
$h_1/\Sigma(h)$	$h_2/\Sigma(h)$	・・・	$h_i/\Sigma(h)$	・・・	$h_{n-1}/\Sigma(h)$

FIG. 4B

$$LMn = \frac{LM1 \times h_1/\Sigma(h) + LM2 \times h_2/\Sigma(h) \cdots + LMi \times h_i/\Sigma(h) \cdots + LMn-1 \times h_{n-1}/\Sigma(h)}{n-1}$$

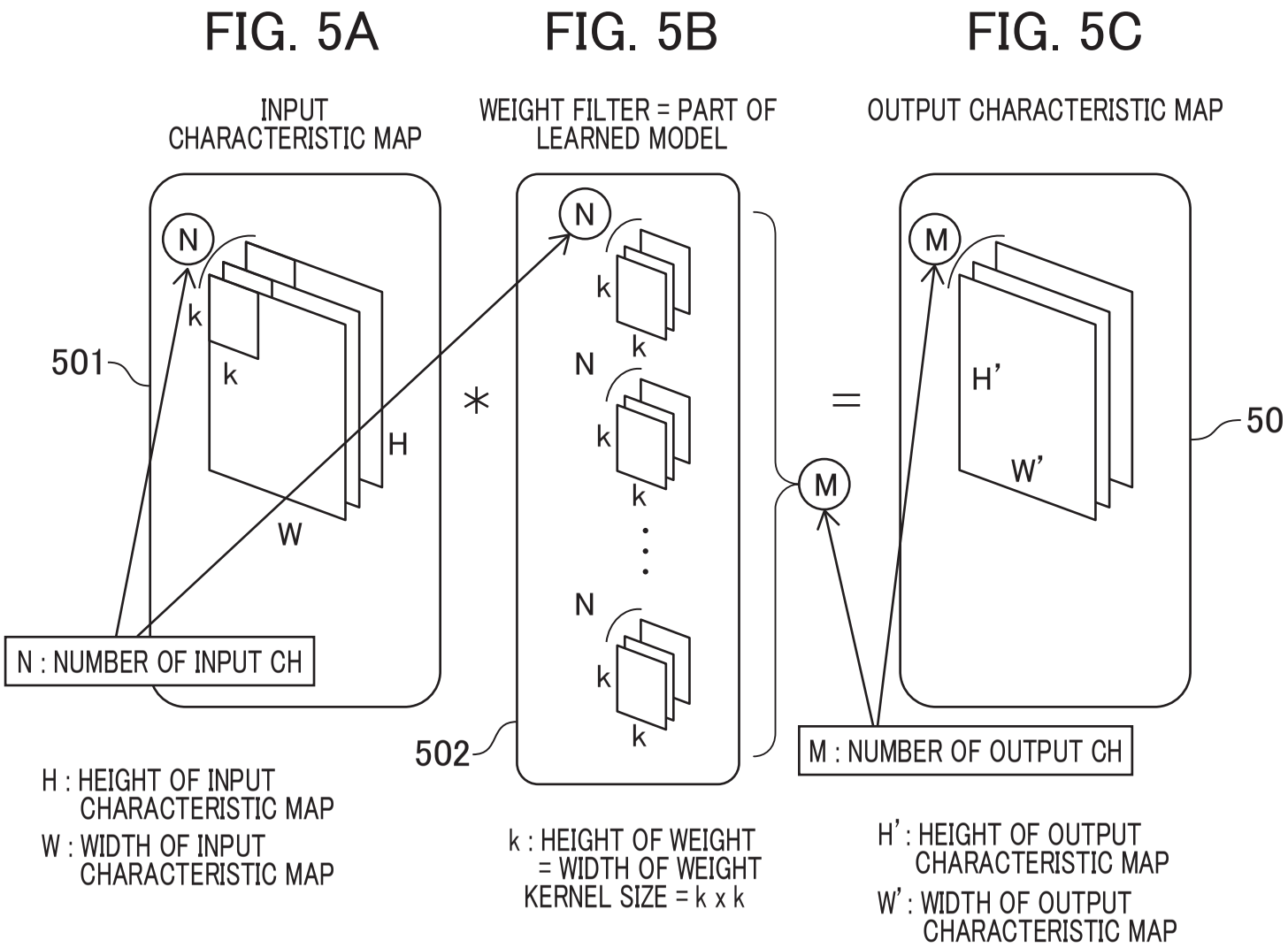
FIG. 5A
INPUT CHARACTERISTIC MAP
N
k
k
H
W
501
N : NUMBER OF INPUT CH
H : HEIGHT OF INPUT CHARACTERISTIC MAP
W : WIDTH OF INPUT CHARACTERISTIC MAP
*
FIG. 5B
WEIGHT FILTER = PART OF LEARNED MODEL
N
k
k
N
k
k
N
k
k
502
k : HEIGHT OF WEIGHT = WIDTH OF WEIGHT
KERNEL SIZE = k x k
=
M
FIG. 5C
OUTPUT CHARACTERISTIC MAP
M
H'
W'
50
M : NUMBER OF OUTPUT CH
H' : HEIGHT OF OUTPUT CHARACTERISTIC MAP
W' : WIDTH OF OUTPUT CHARACTERISTIC MAP

FIG. 6

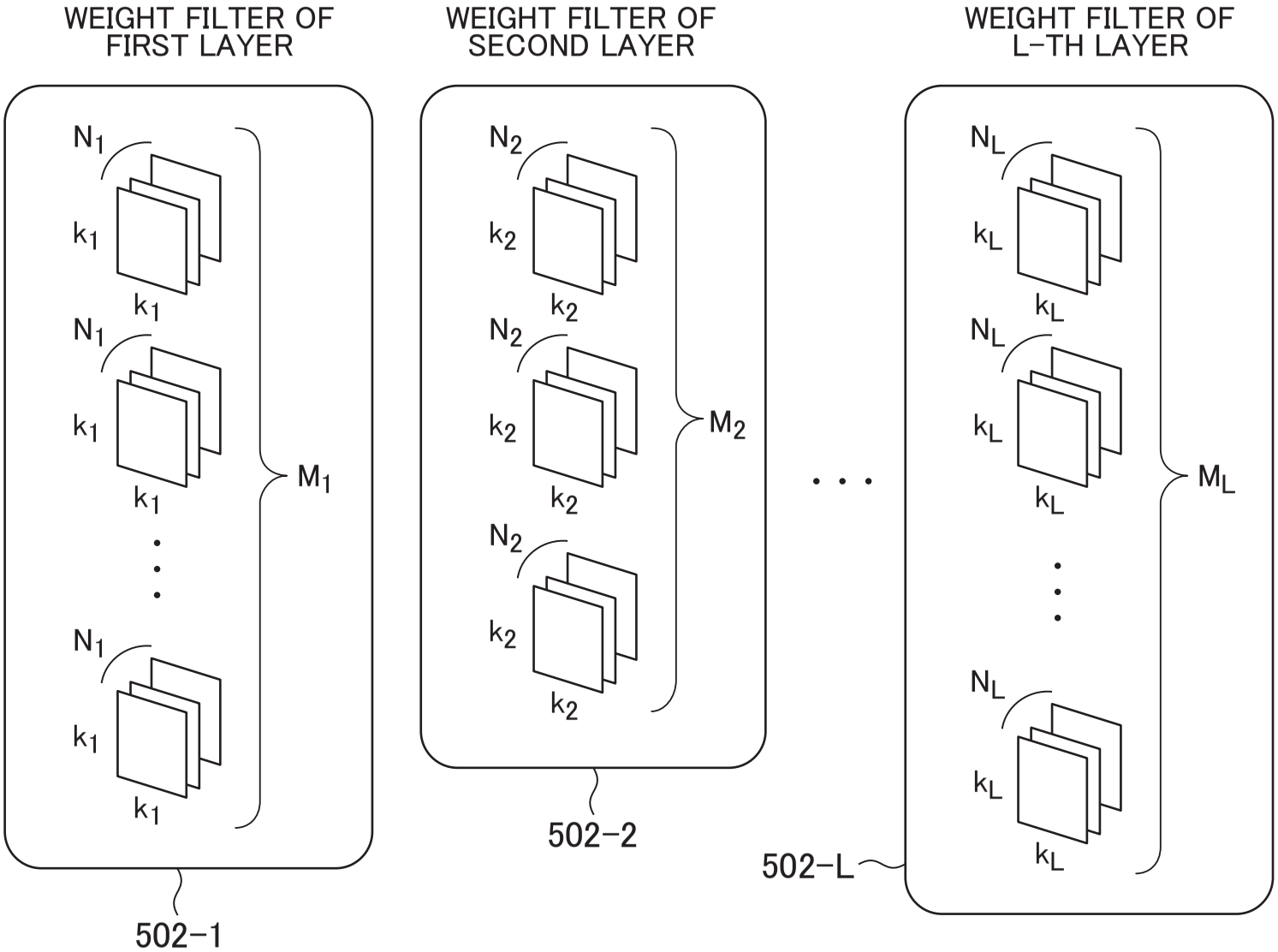
WEIGHT FILTER OF FIRST LAYER
WEIGHT FILTER OF SECOND LAYER
WEIGHT FILTER OF L-TH LAYER
N1
k1
M1
N2
k2
M2
NL
kL
ML
502-1
502-2
502-L

FIG. 7

701 LAYER NUMBER	702 INPUT CH NUMBER	703 OUTPUT CH NUMBER	704 WEIGHT (VERTICAL)	705 WEIGHT (HORIZONTAL)	706 VALUE
1	1	1	1	1	V(1,1,1,1,1)
	···	···	···	···	···
	N_1	M_1	k_1	k_1	$V(1,N_1,M_1,k_1,k_1)$
2	1	1	1	1	V(2,1,1,1,1)
	···	···	···	···	···
	N_2	M_2	k_2	k_2	$V(1,N_2,M_2,k_2,k_2)$
···	···	···	···	···	···
L	1	1	1	1	V(L,1,1,1,1)
	···	···	···	···	···
	N_L	M_L	k_L	k_L	$V(1,N_L,M_L,k_L,k_L)$

LMi

LEARNED MODEL

FIG. 8

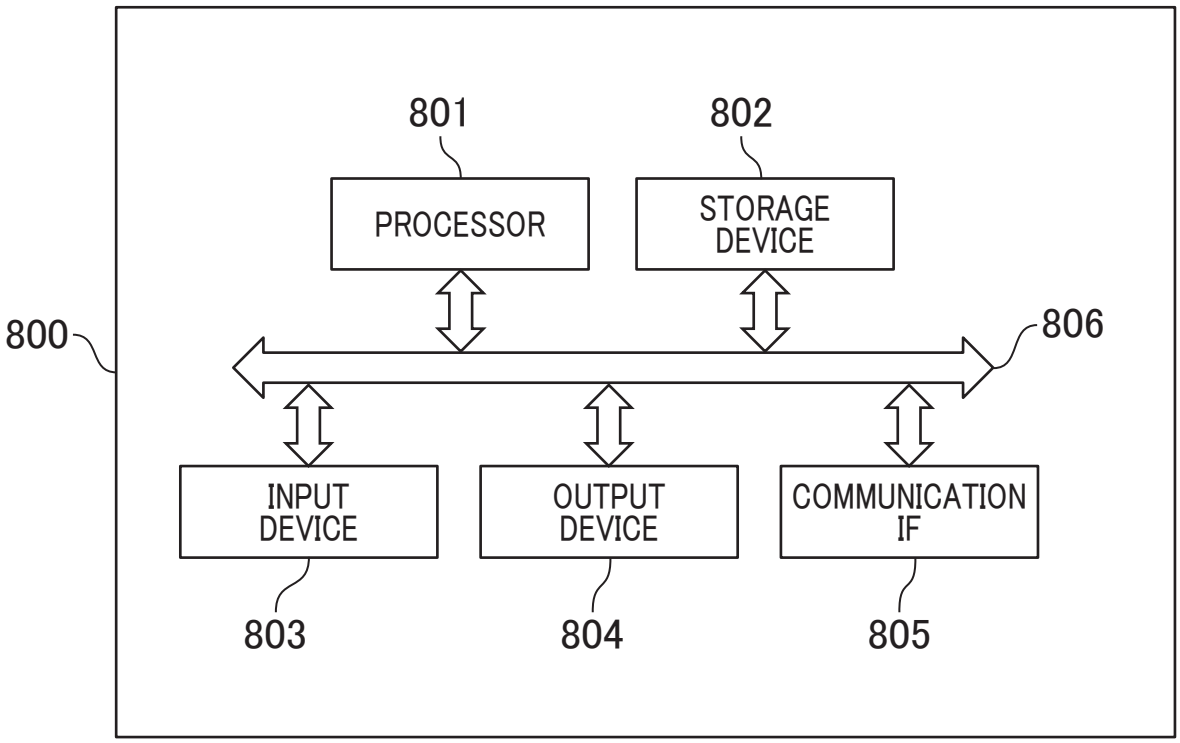
801
802
PROCESSOR
STORAGE DEVICE
800
806
INPUT DEVICE
OUTPUT DEVICE
COMMUNICATION IF
803
804
805

FIG. 9

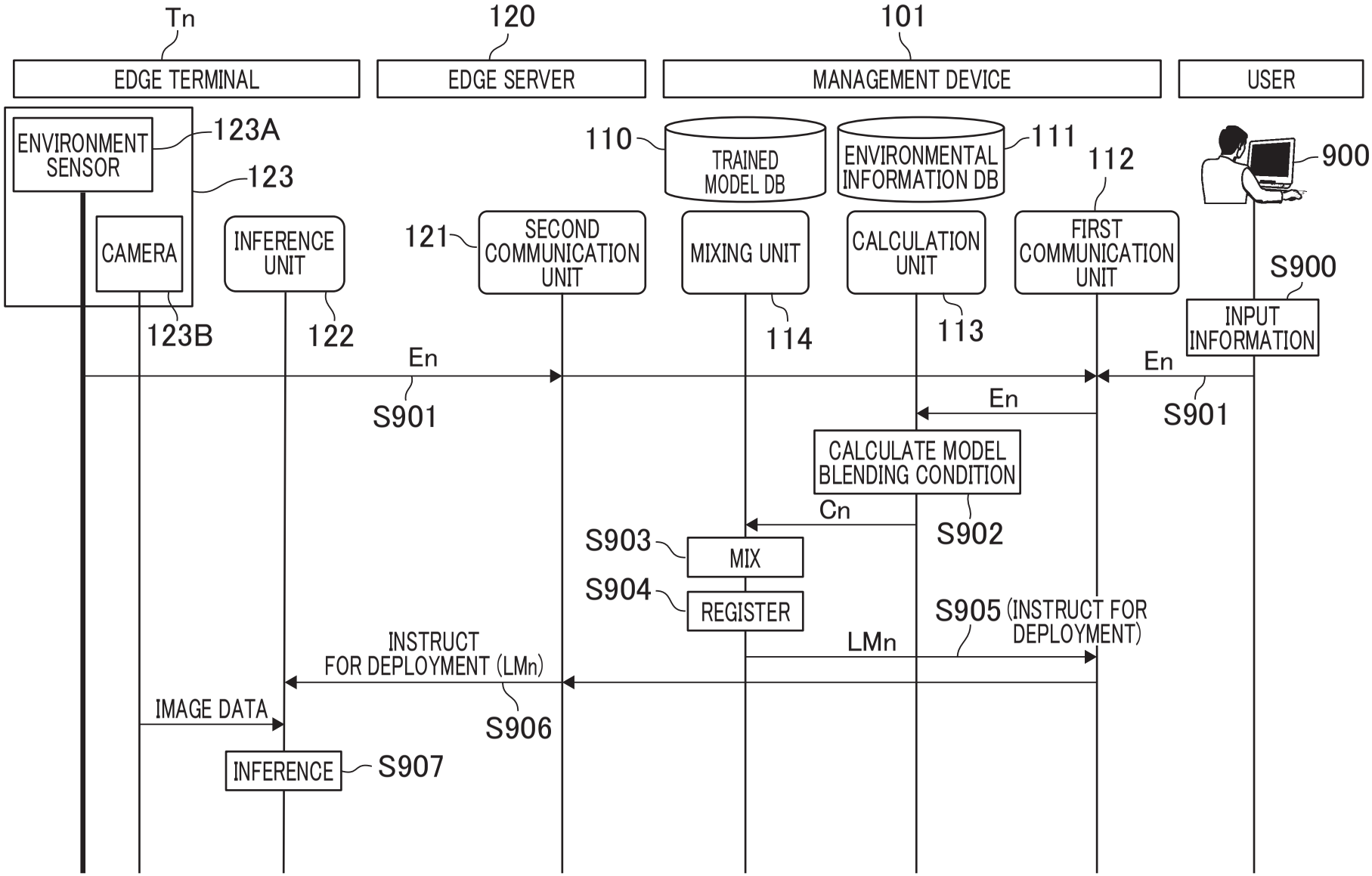
Tn
120
101
EDGE TERMINAL
EDGE SERVER
MANAGEMENT DEVICE
USER
ENVIRONMENT SENSOR
123A
123
CAMERA
123B
INFERENCE UNIT
122
121
SECOND COMMUNICATION UNIT
110
TRAINED MODEL DB
MIXING UNIT
114
ENVIRONMENTAL INFORMATION DB
111
CALCULATION UNIT
113
112
FIRST COMMUNICATION UNIT
900
S900
INPUT INFORMATION
En
S901
En
S901
En
CALCULATE MODEL BLENDING CONDITION
S902
Cn
S903
MIX
S904
REGISTER
S905 (INSTRUCT FOR DEPLOYMENT)
LMn
INSTRUCT FOR DEPLOYMENT (LMn)
S906
IMAGE DATA
INFERENCE
S907

FIG. 10

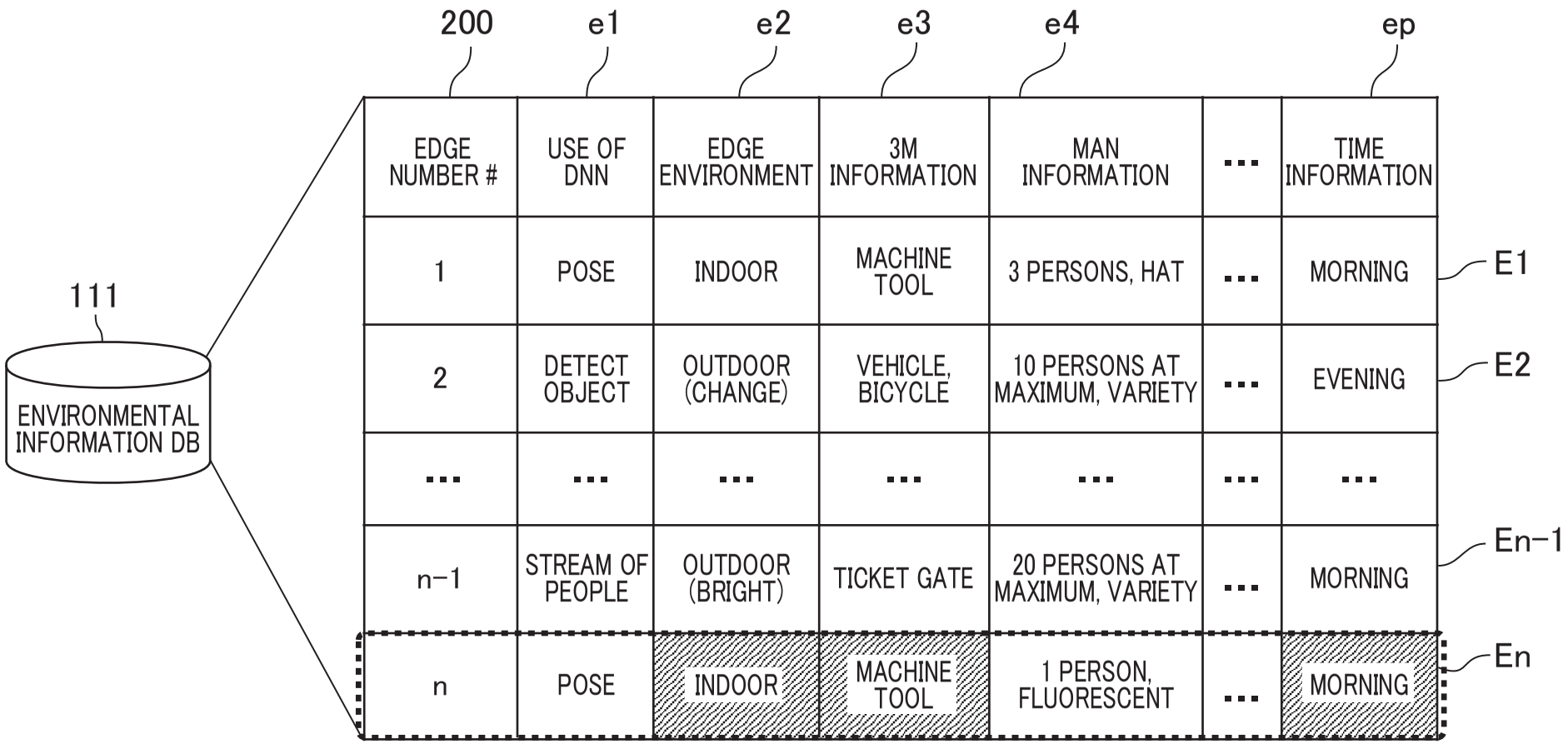
200
e1
e2
e3
e4
ep
111
ENVIRONMENTAL INFORMATION DB
EDGE NUMBER #
USE OF DNN
EDGE ENVIRONMENT
3M INFORMATION
MAN INFORMATION
...
TIME INFORMATION
1
POSE
INDOOR
MACHINE TOOL
3 PERSONS, HAT
...
MORNING
E1
2
DETECT OBJECT
OUTDOOR (CHANGE)
VEHICLE, BICYCLE
10 PERSONS AT MAXIMUM, VARIETY
...
EVENING
E2
...
n−1
STREAM OF PEOPLE
OUTDOOR (BRIGHT)
TICKET GATE
20 PERSONS AT MAXIMUM, VARIETY
MORNING
En−1
n
POSE
INDOOR
MACHINE TOOL
1 PERSON, FLUORESCENT
MORNING
En

FIG. 11

300

200

EDGE INFORMATION / EDGE NUMBER #	e1 USE OF DNN	e2 EDGE ENVIRONMENT	e3 3M INFORMATION	e4 MAN INFORMATION	···	ep TIME INFORMATION	301 MATCHED NUMBER
1	1	1	1	0	···	1	h_1
2	0	0	0	0	···	0	h_2
···	···	···	···	···	···	···	···
i	0	0	1	1	···	0	h_i
···	···	···	···	···	···	···	···
n−1	0	0	0	0	···	1	h_{n-1}

FIG. 12

200 1200 1201

EDGE INFORMATION / EDGE NUMBER #	e1 USE OF DNN	e2 EDGE ENVIRONMENT	e3 3M INFORMATION	e4 MAN INFORMATION	・・・	ej ○○○	・・・	ep TIME INFORMATION	WEIGHTED MATCHED NUMBER
1	1	0	0	0	・・・	X_{1j}	・・・	1	$S_1 = \Sigma(w_j \times x_{1j})$
2	0	0	0	0	・・・	X_{2j}	・・・	0	$S_2 = \Sigma(w_j \times x_{2j})$
・・・	・・・	・・・	・・・	・・・	・・・	・・・	・・・	・・・	・・・
i	0	0	1	1	・・・	X_{ij}	・・・	0	$S_i = \Sigma(w_j \times x_{ij})$
・・・	・・・	・・・	・・・	・・・	・・・	・・・	・・・	・・・	・・・
n−1	1	0	1	1	・・・	$X_{(n-1)j}$	・・・	1	$S_{n-1} = \Sigma(w_j \times x_{(n-1)j})$
	↑ W_1	↑ W_2	↑ W_3	↑ W_4		↑ W_j		↑ W_p	

FIG. 13A

Cn

MODEL BLENDING CONDITION

R1	R2	・・・	Rn−1
$S_1/\Sigma(S)$	$S_2/\Sigma(S)$	・・・	$S_{n-1}/\Sigma(S)$

FIG. 13B

$$LMn = \frac{LM1 \times S_1/\Sigma(S) + LM2 \times S_2/\Sigma(S) \cdots + LMi \times S_i/\Sigma(S) \cdots + LMn-1 \times S_{n-1}/\Sigma(S)}{n-1}$$

FIG. 14

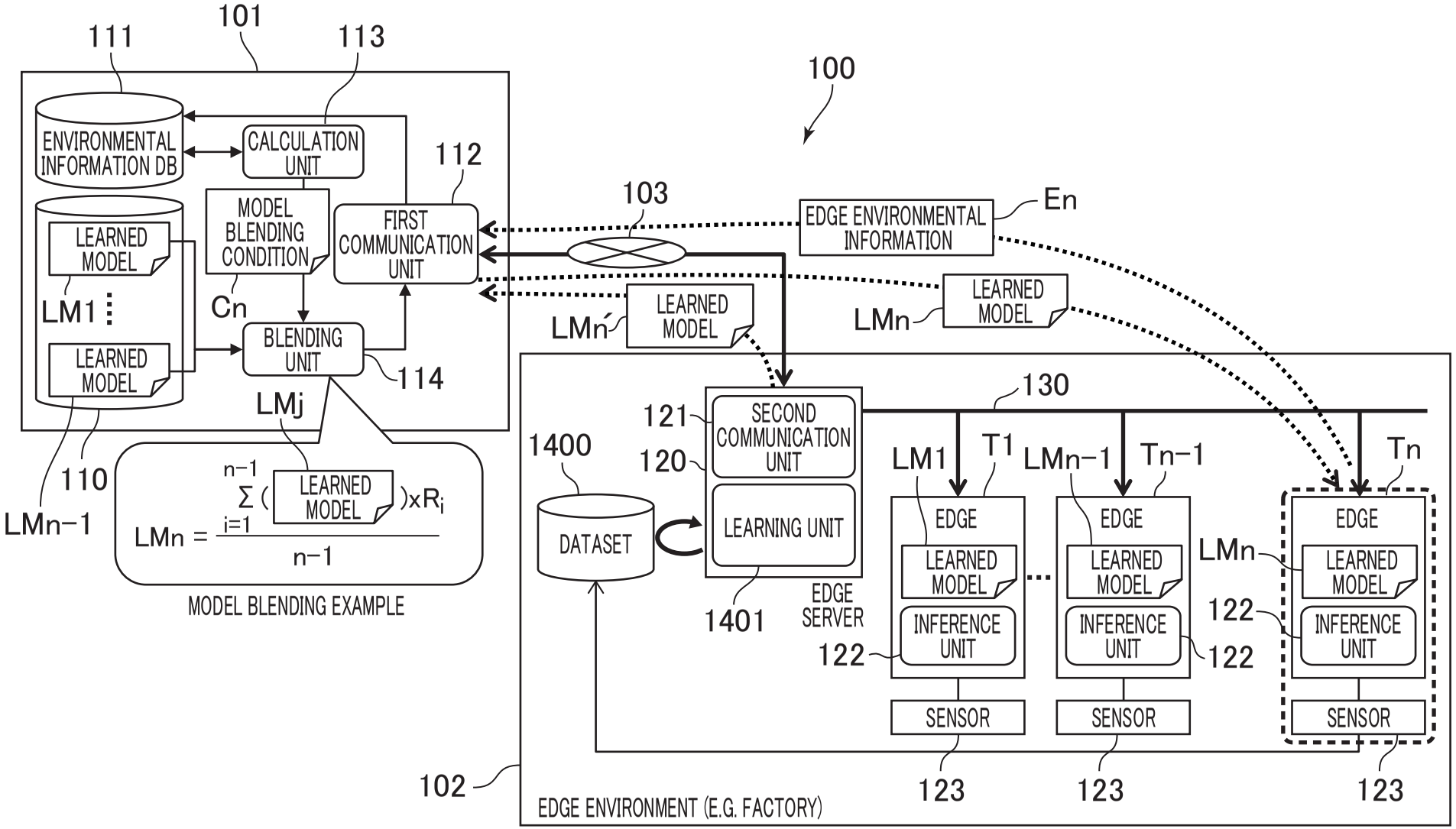
100
101
111
113
112
ENVIRONMENTAL INFORMATION DB
CALCULATION UNIT
MODEL BLENDING CONDITION
FIRST COMMUNICATION UNIT
LEARNED MODEL
LM1
LEARNED MODEL
Cn
BLENDING UNIT
114
LMj
110
LMn−1
LMn = Σ (LEARNED MODEL)xRi / n−1
MODEL BLENDING EXAMPLE
103
EDGE ENVIRONMENTAL INFORMATION
En
LMn′
LEARNED MODEL
LMn
LEARNED MODEL
130
121
SECOND COMMUNICATION UNIT
120
LEARNING UNIT
1400
DATASET
1401
EDGE SERVER
LM1
T1
LMn−1
Tn−1
Tn
EDGE
LEARNED MODEL
INFERENCE UNIT
122
SENSOR
123
LMn
102
EDGE ENVIRONMENT (E.G. FACTORY)

FIG. 15

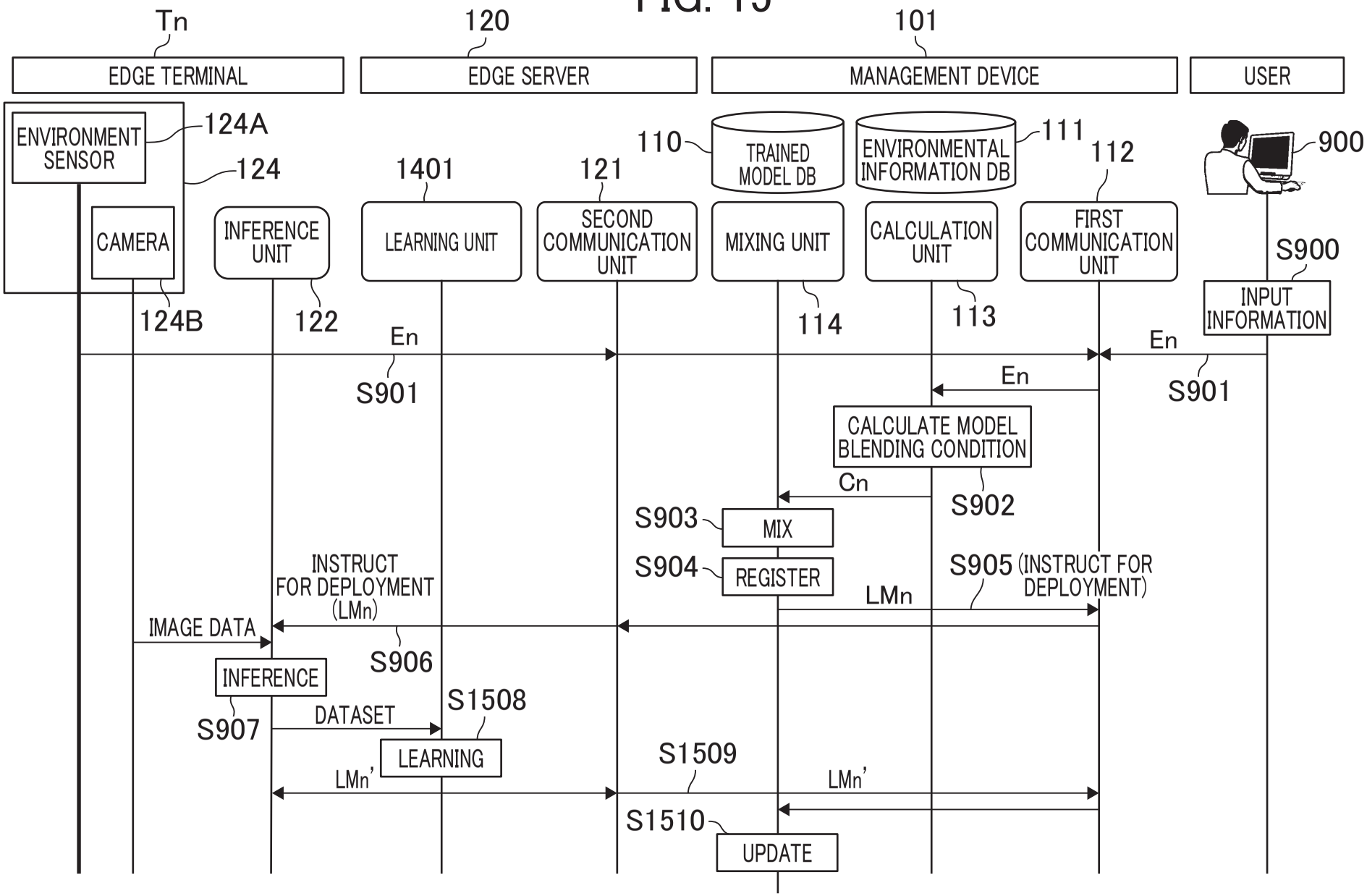
Tn
EDGE TERMINAL
120
EDGE SERVER
101
MANAGEMENT DEVICE
USER
ENVIRONMENT SENSOR
124A
124
CAMERA
124B
INFERENCE UNIT
122
1401
LEARNING UNIT
121
SECOND COMMUNICATION UNIT
110
TRAINED MODEL DB
ENVIRONMENTAL INFORMATION DB
111
MIXING UNIT
114
CALCULATION UNIT
113
112
FIRST COMMUNICATION UNIT
900
S900
INPUT INFORMATION
En
S901
En
S901
En
CALCULATE MODEL BLENDING CONDITION
S902
Cn
S903
MIX
S904
REGISTER
LMn
S905 (INSTRUCT FOR DEPLOYMENT)
INSTRUCT FOR DEPLOYMENT (LMn)
S906
IMAGE DATA
INFERENCE
S907
DATASET
S1508
LEARNING
LMn'
S1509
LMn'
S1510
UPDATE

FIG. 16

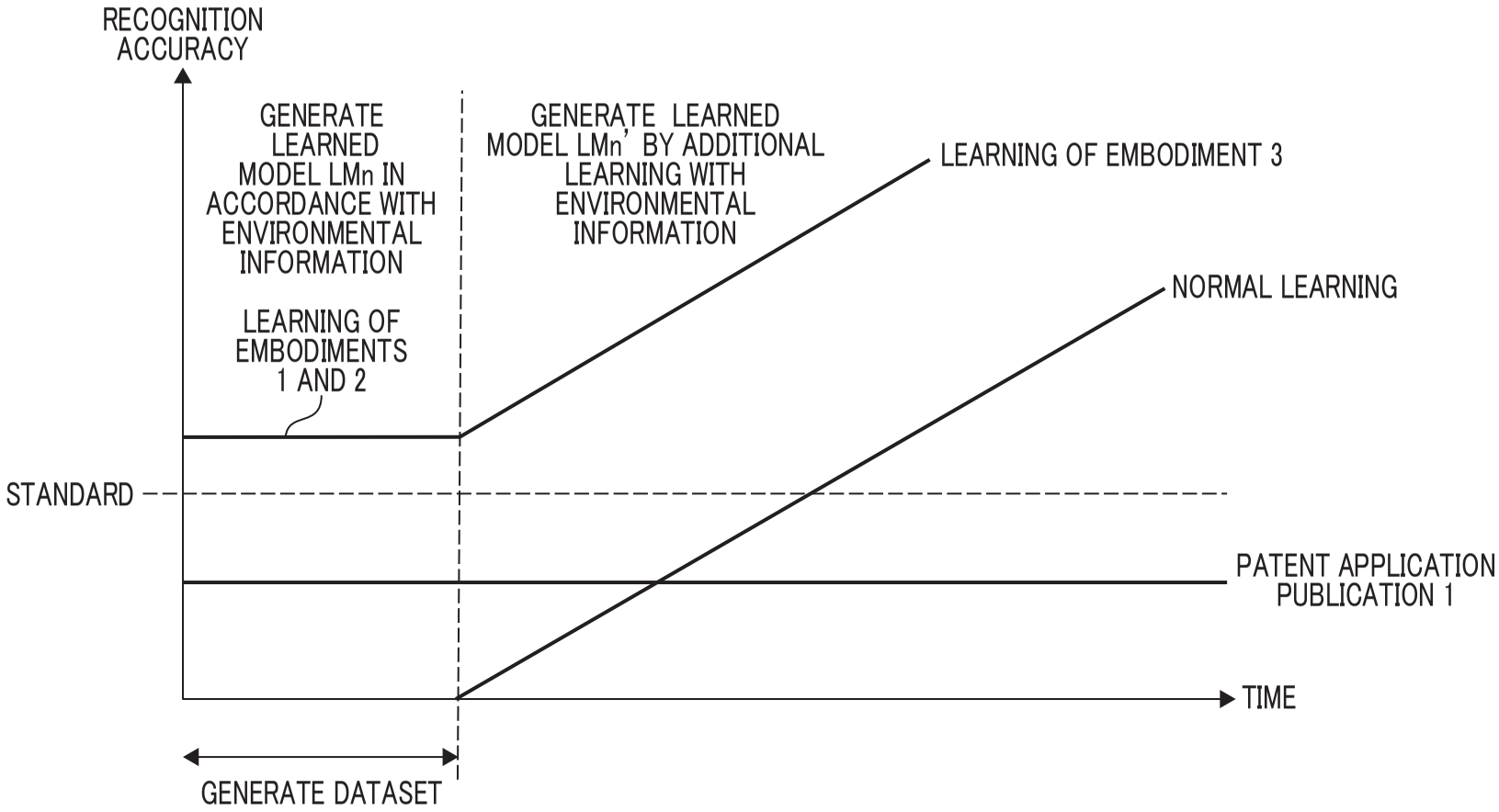
RECOGNITION ACCURACY
GENERATE LEARNED MODEL LMn IN ACCORDANCE WITH ENVIRONMENTAL INFORMATION
LEARNING OF EMBODIMENTS 1 AND 2
GENERATE LEARNED MODEL LMn' BY ADDITIONAL LEARNING WITH ENVIRONMENTAL INFORMATION
LEARNING OF EMBODIMENT 3
NORMAL LEARNING
STANDARD
PATENT APPLICATION PUBLICATION 1
TIME
GENERATE DATASET

FIG. 17

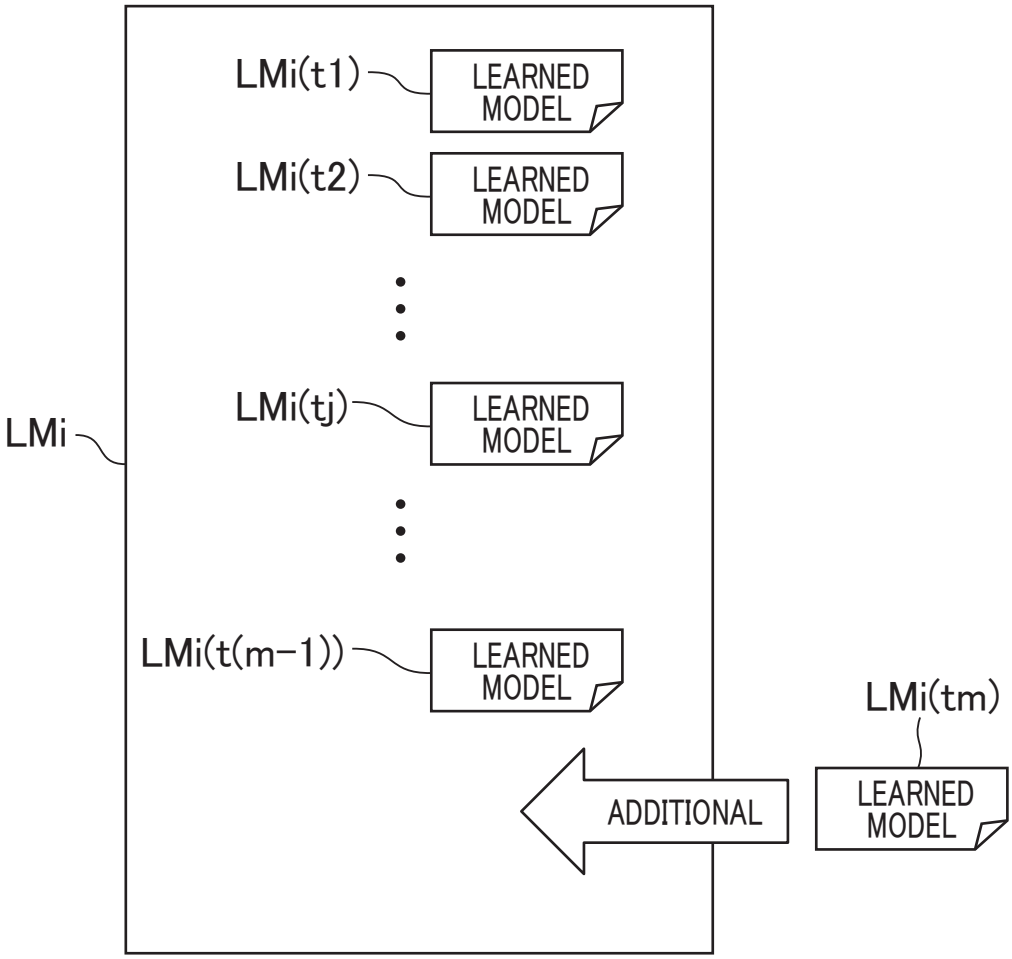
LMi(t1)
LEARNED MODEL
LMi(t2)
LEARNED MODEL
LMi(tj)
LEARNED MODEL
LMi
LMi(t(m−1))
LEARNED MODEL
LMi(tm)
ADDITIONAL
LEARNED MODEL

FIG. 18

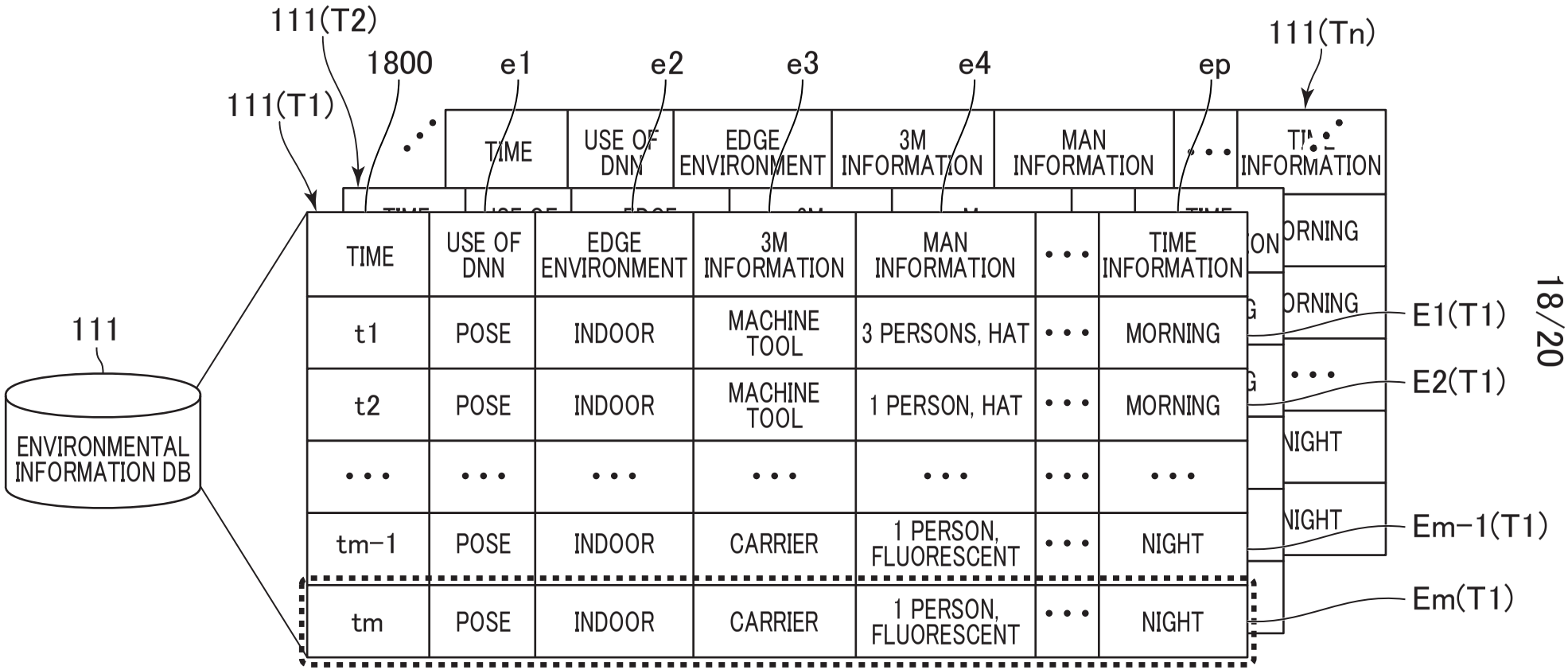
111(T2)
1800
e1
e2
e3
e4
ep
111(Tn)
111(T1)
TIME
USE OF DNN
EDGE ENVIRONMENT
3M INFORMATION
MAN INFORMATION
TIME INFORMATION
111
ENVIRONMENTAL INFORMATION DB
t1 POSE INDOOR MACHINE TOOL 3 PERSONS, HAT MORNING
t2 POSE INDOOR MACHINE TOOL 1 PERSON, HAT MORNING
tm-1 POSE INDOOR CARRIER 1 PERSON, FLUORESCENT NIGHT
tm POSE INDOOR CARRIER 1 PERSON, FLUORESCENT NIGHT
E1(T1)
E2(T1)
Em-1(T1)
Em(T1)

FIG. 19

300(T1)

1800

EDGE INFORMATION / TIME	e1 USE OF DNN	e2 EDGE ENVIRONMENT	e3 3M INFORMATION	e4 MAN INFORMATION	···	ep TIME INFORMATION	301 MATCHED NUMBER
t1	1	1	0	0	···	0	g_1
t2	1	1	0	0	···	0	g_2
···	···	···	···	···	···	···	···
tj	0	0	1	1	···	0	g_j
···	···	···	···	···	···	···	···
tm−1	1	1	1	1	···	1	g_{m-1}

FIG. 20A

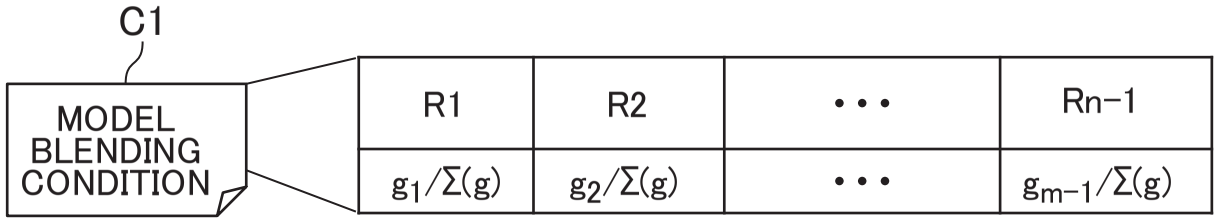

FIG. 20B

$$LM1 = \frac{LM1(t1)1 \times g_1/\Sigma(g) + Lm1(t2) \times g_2/\Sigma(g) \cdots + Lm1(tj) \times g_i/\Sigma(g) \cdots + Lm1(tm-1) \times g_{n-1}/\Sigma(g)}{n-1}$$