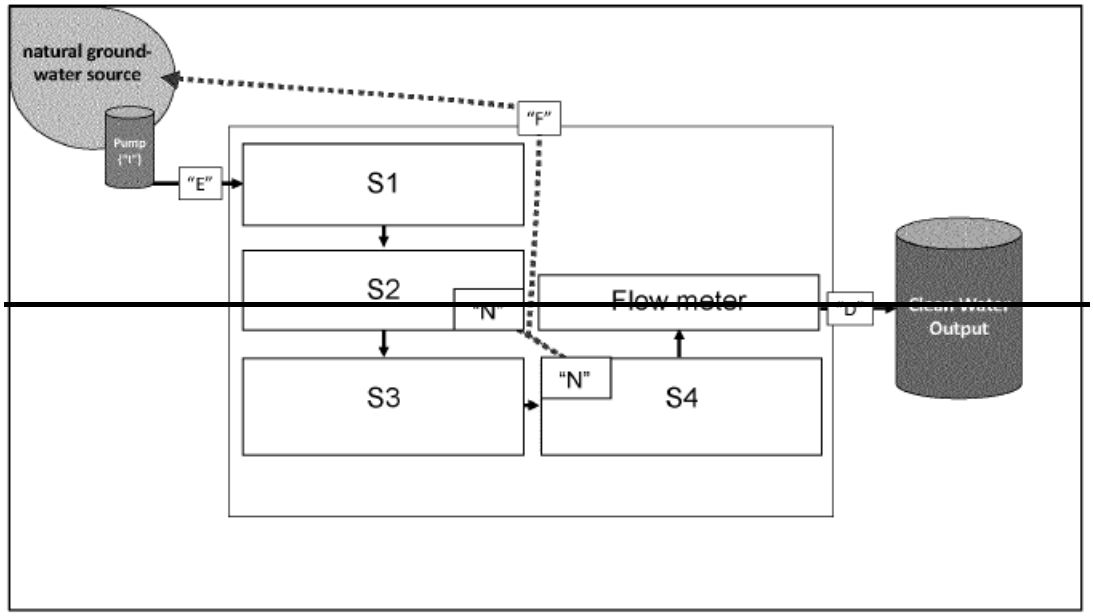
natural ground-water source
Pump ("I")
"E"
"F"
S1
S2
"N"
Flow meter
"D"
Clean Water Output
S3
"N"
S4

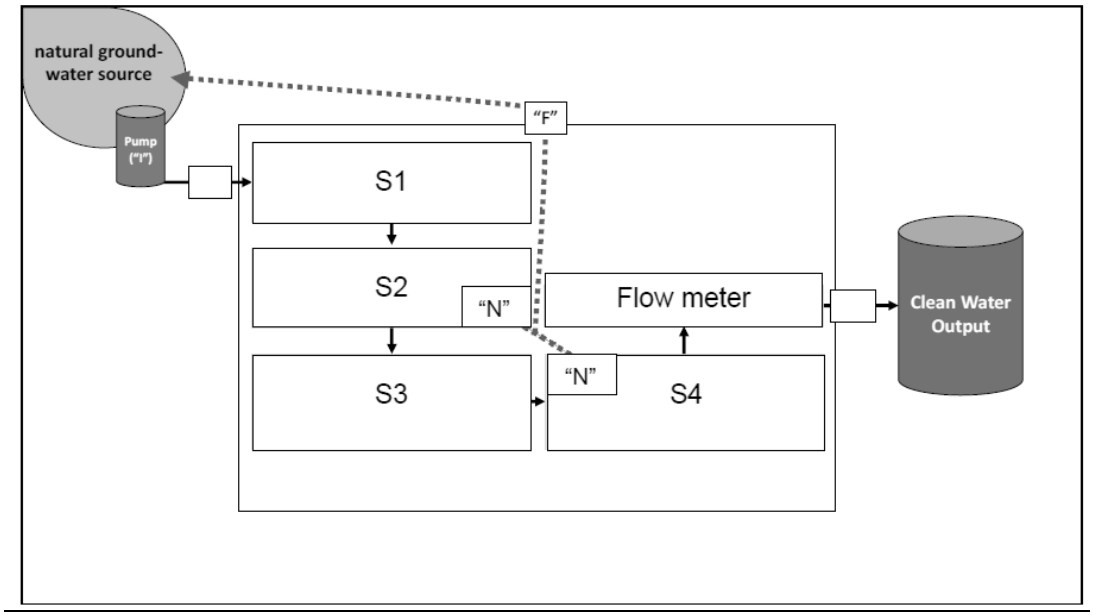
natural ground-water source
Pump ("I")
"F"
S1
S2
"N"
Flow meter
Clean Water Output
S3
"N"
S4

FIG.2

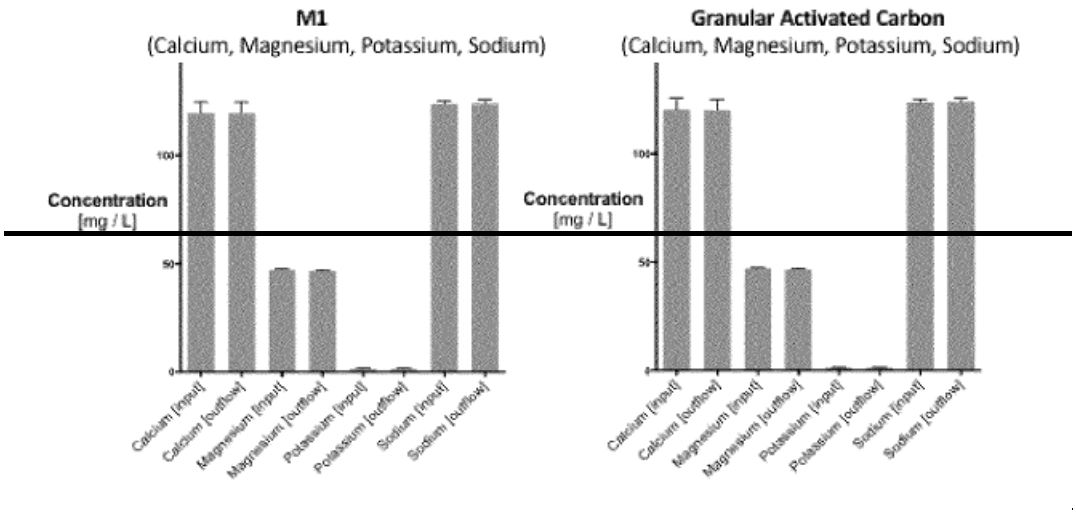

~~FIG. 11~~

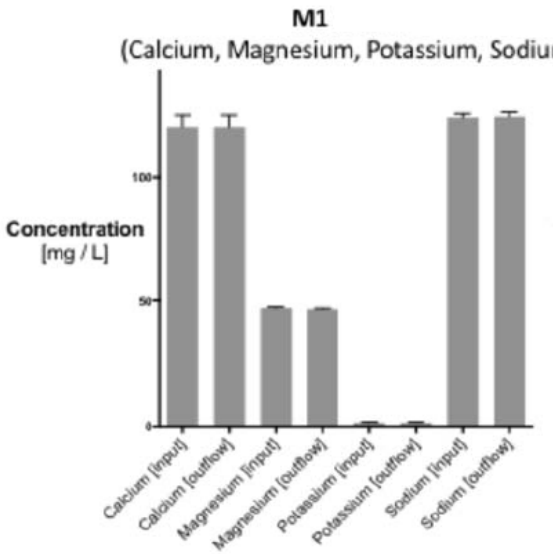

FIG. 11A

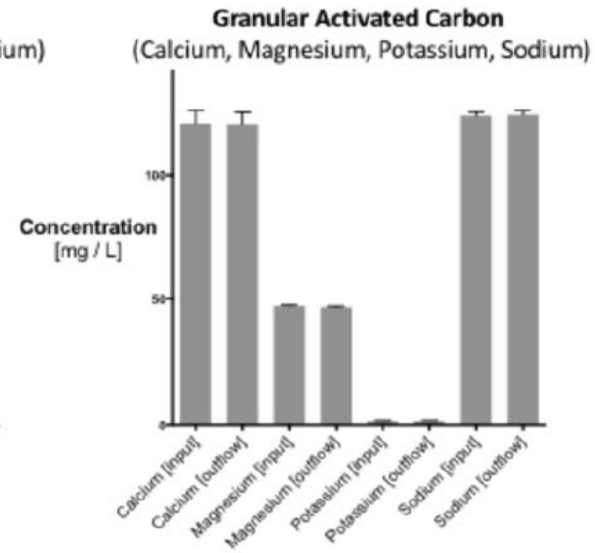

FIG. 11B

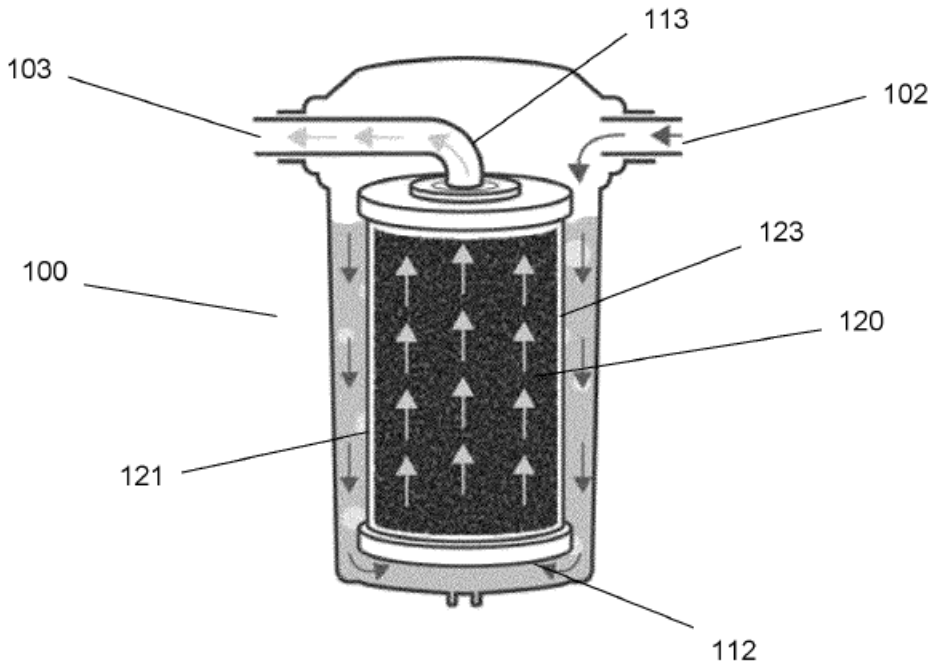

FIG. 12