(12) INTERNATIONAL APPLICATION PUBLISHED UNDER THE PATENT COOPERATION TREATY (PCT)

CORRECTED VERSION

(19) World Intellectual Property Organization
International Bureau

(43) International Publication Date
13 April 2006 (13.04.2006)

PCT

(10) International Publication Number
WO 2006/039133 A2

(51) International Patent Classification:
C23G 1/00 (2006.01) *B08B 3/00* (2006.01)
B08B 5/04 (2006.01)

(21) International Application Number:
PCT/US2005/033508

(22) International Filing Date:
21 September 2005 (21.09.2005)

(25) Filing Language: English

(26) Publication Language: English

(30) Priority Data:
10/954,098 30 September 2004 (30.09.2004) US

(71) Applicant *(for all designated States except US)*: **LAM RESEARCH CORPORATION** [US/US]; 4650 Cushing Parkway, Freemont, CA 94538 (US).

(72) Inventor: **KROEKER, Tony, R.**; 439 Patricia Road, Goergetown, TX 78628 (US).

(74) Agent: **ALAPATI, Nanda, K.**; Womble Carlyle Sandridge & Rice PLLC, P.O. Box 7037, Atlanta, GA 30357-0037 (US).

(81) Designated States *(unless otherwise indicated, for every kind of national protection available)*: AE, AG, AL, AM, AT, AU, AZ, BA, BB, BG, BR, BW, BY, BZ, CA, CH, CN, CO, CR, CU, CZ, DE, DK, DM, DZ, EC, EE, EG, ES, FI, GB, GD, GE, GH, GM, HR, HU, ID, IL, IN, IS, JP, KE, KG, KM, KP, KR, KZ, LC, LK, LR, LS, LT, LU, LV, LY, MA, MD, MG, MK, MN, MW, MX, MZ, NA, NG, NI, NO, NZ, OM, PG, PH, PL, PT, RO, RU, SC, SD, SE, SG, SK, SL, SM, SY, TJ, TM, TN, TR, TT, TZ, UA, UG, US, UZ, VC, VN, YU, ZA, ZM, ZW.

(84) Designated States *(unless otherwise indicated, for every kind of regional protection available)*: ARIPO (BW, GH, GM, KE, LS, MW, MZ, NA, SD, SL, SZ, TZ, UG, ZM, ZW), Eurasian (AM, AZ, BY, KG, KZ, MD, RU, TJ, TM), European (AT, BE, BG, CH, CY, CZ, DE, DK, EE, ES, FI, FR, GB, GR, HU, IE, IS, IT, LT, LU, LV, MC, NL, PL, PT, RO, SE, SI, SK, TR), OAPI (BF, BJ, CF, CG, CI, CM, GA, GN, GQ, GW, ML, MR, NE, SN, TD, TG).

Declarations under Rule 4.17:
— *as to applicant's entitlement to apply for and be granted a patent (Rule 4.17(ii))*
— *as to the applicant's entitlement to claim the priority of the earlier application (Rule 4.17(iii))*

Published:
— *without international search report and to be republished upon receipt of that report*

[Continued on next page]

(54) Title: CLUSTER TOOL PROCESS CHAMBER HAVING INTEGRATED HIGH PRESSURE AND VACUUM CHAMBERS

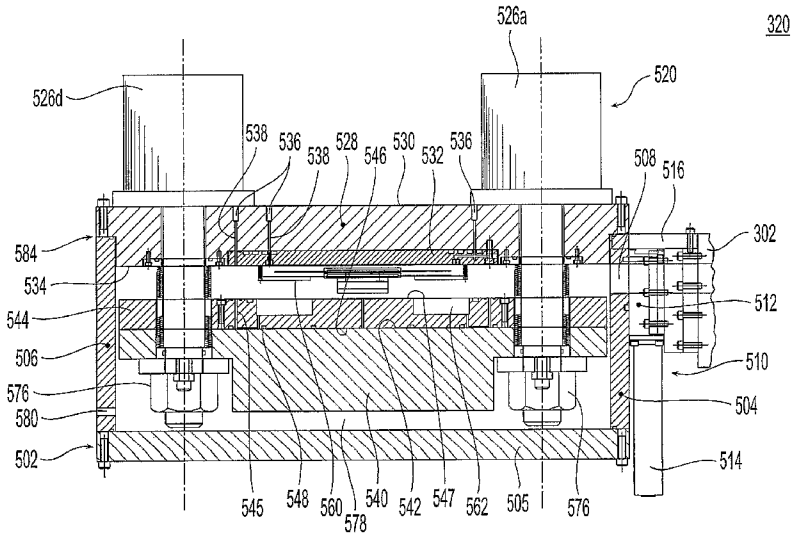

(57) Abstract: A cluster tool includes a transfer chamber connected to a plurality of vacuum chambers. An additional process chamber connected to the transfer chamber includes a high pressure chamber assembly seated on a housing. The high pressure chamber assembly, which is adjustable between an open position and a closed position, includes an upper chamber portion and a lower chamber portion. Hydraulic cylinders mounted on the upper chamber portion and having chamber rods that attach to the lower chamber portion are configured to move the lower chamber relative to the upper chamber portion between the two positions. When the two portions are brought together into the closed, the high pressure chamber assembly forms a high pressure chamber suitable for processing wafers with supercritical CO_2. Once the high pressure chamber is formed, a region between lower chamber portion and a housing may be evacuated to form a vacuum chamber outside a portion of the high pressure chamber.

WO 2006/039133 A2

(48) Date of publication of this corrected version:
29 June 2006

(15) Information about Correction:
see PCT Gazette No. 26/2006 of 29 June 2006

For two-letter codes and other abbreviations, refer to the "Guidance Notes on Codes and Abbreviations" appearing at the beginning of each regular issue of the PCT Gazette.