(12) INTERNATIONAL APPLICATION PUBLISHED UNDER THE PATENT COOPERATION TREATY (PCT)

(19) World Intellectual Property Organization
International Bureau

(43) International Publication Date
30 December 2009 (30.12.2009)

PCT

(10) International Publication Number
WO 2009/157969 A3

(51) International Patent Classification:
C09K 3/14 (2006.01) *H01L 21/304* (2006.01)

(21) International Application Number:
PCT/US2009/002839

(22) International Filing Date:
7 May 2009 (07.05.2009)

(25) Filing Language: English

(26) Publication Language: English

(30) Priority Data:
61/132,867 23 June 2008 (23.06.2008) US
12/387,792 7 May 2009 (07.05.2009) US

(71) Applicants *(for all designated States except US)*: **SAINT-GOBAIN ABRASIVES, INC.** [US/US]; 1 New Bond Street, Worcester, MA 01615 (US). **SAINT-GOBAIN ABRASIFS** [FR/FR]; Rue de l'ambassadeur, F-78700 Conflans Sainte Honorine (FR).

(72) Inventor; and

(75) Inventor/Applicant *(for US only)*: **UPADHYAY, Rachana, D.** [IN/US]; 11 Amherst Road, Shrewsbury, MA 01545 (US).

(74) Agent: **CROSBY, Mike, W.**; Saint-Gobain Corporation, 1 New Bond Street, Box Number 15138, Worcester, MA 01615-0138 (US).

(81) Designated States *(unless otherwise indicated, for every kind of national protection available)*: AE, AG, AL, AM, AO, AT, AU, AZ, BA, BB, BG, BH, BR, BW, BY, BZ, CA, CH, CN, CO, CR, CU, CZ, DE, DK, DM, DO, DZ, EC, EE, EG, ES, FI, GB, GD, GE, GH, GM, GT, HN, HR, HU, ID, IL, IN, IS, JP, KE, KG, KM, KN, KP, KR, KZ, LA, LC, LK, LR, LS, LT, LU, LY, MA, MD, ME, MG, MK, MN, MW, MX, MY, MZ, NA, NG, NI, NO, NZ, OM, PG, PH, PL, PT, RO, RS, RU, SC, SD, SE, SG, SK, SL, SM, ST, SV, SY, TJ, TM, TN, TR, TT, TZ, UA, UG, US, UZ, VC, VN, ZA, ZM, ZW.

(84) Designated States *(unless otherwise indicated, for every kind of regional protection available)*: ARIPO (BW, GH, GM, KE, LS, MW, MZ, NA, SD, SL, SZ, TZ, UG, ZM, ZW), Eurasian (AM, AZ, BY, KG, KZ, MD, RU, TJ, TM), European (AT, BE, BG, CH, CY, CZ, DE, DK, EE, ES, FI, FR, GB, GR, HR, HU, IE, IS, IT, LT, LU, LV, MC, MK, MT, NL, NO, PL, PT, RO, SE, SI, SK, TR), OAPI (BF, BJ, CF, CG, CI, CM, GA, GN, GQ, GW, ML, MR, NE, SN, TD, TG).

Declarations under Rule 4.17:

— *as to applicant's entitlement to apply for and be granted a patent (Rule 4.17(ii))*

— *as to the applicant's entitlement to claim the priority of the earlier application (Rule 4.17(iii))*

Published:

— *with international search report (Art. 21(3))*

— *before the expiration of the time limit for amending the claims and to be republished in the event of receipt of amendments (Rule 48.2(h))*

(88) Date of publication of the international search report:
25 March 2010

(54) Title: HIGH POROSITY SUPERABRASIVE RESIN PRODUCTS AND METHOD OF MANUFACTURE

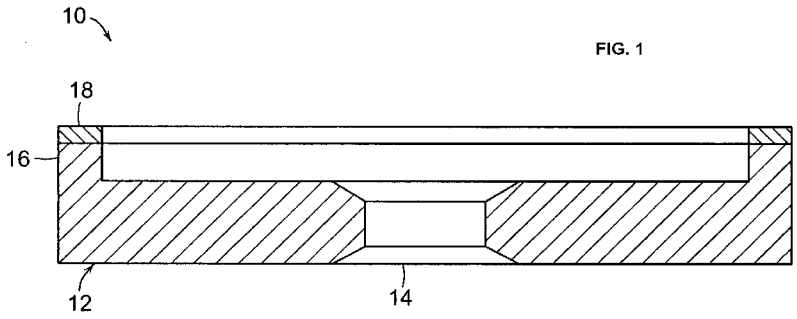

FIG. 1

(57) Abstract: A superabrasive product, such as a superabrasive tool, includes a superabrasive grain component and a porous continuous phase that includes a thermoplastic polymer component in which the superabrasive grain component is distributed. A superabrasive product precursor to the superabrasive product includes a superabrasive grain component, a bond component and a polymer blowing agent of encapsulated gas. A method of forming a superabrasive product includes combining a superabrasive, a bond component and a polymer blowing agent of encapsulated gas to form, for example, a superabrasive product precursor. The combined superabrasive, bond component and polymer blowing agent of encapsulated gas are heated to a temperature and for a period of time that causes release of at least a portion of the gas from encapsulation within the blowing agent.

WO 2009/157969 A3