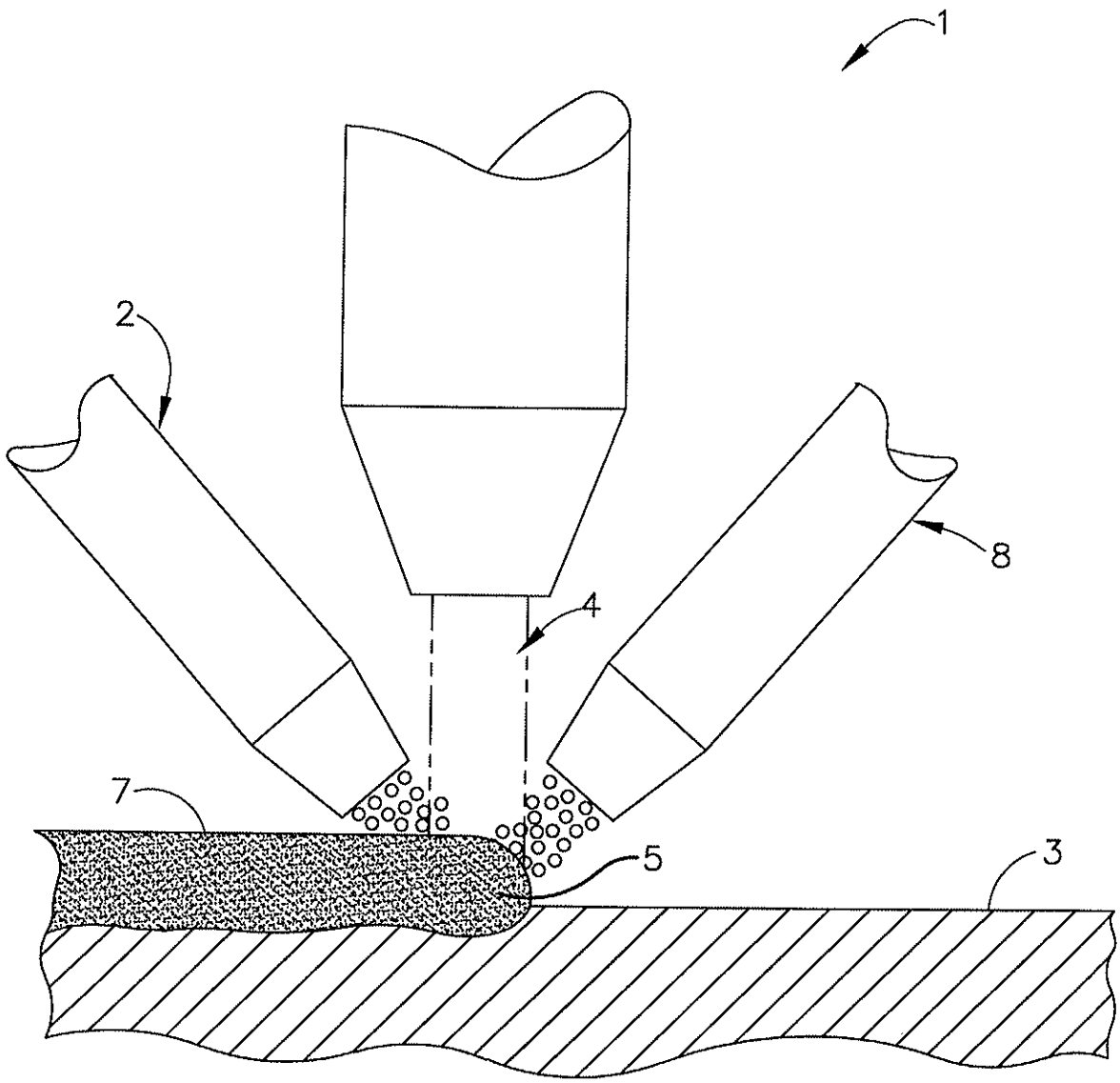

FIG. 1

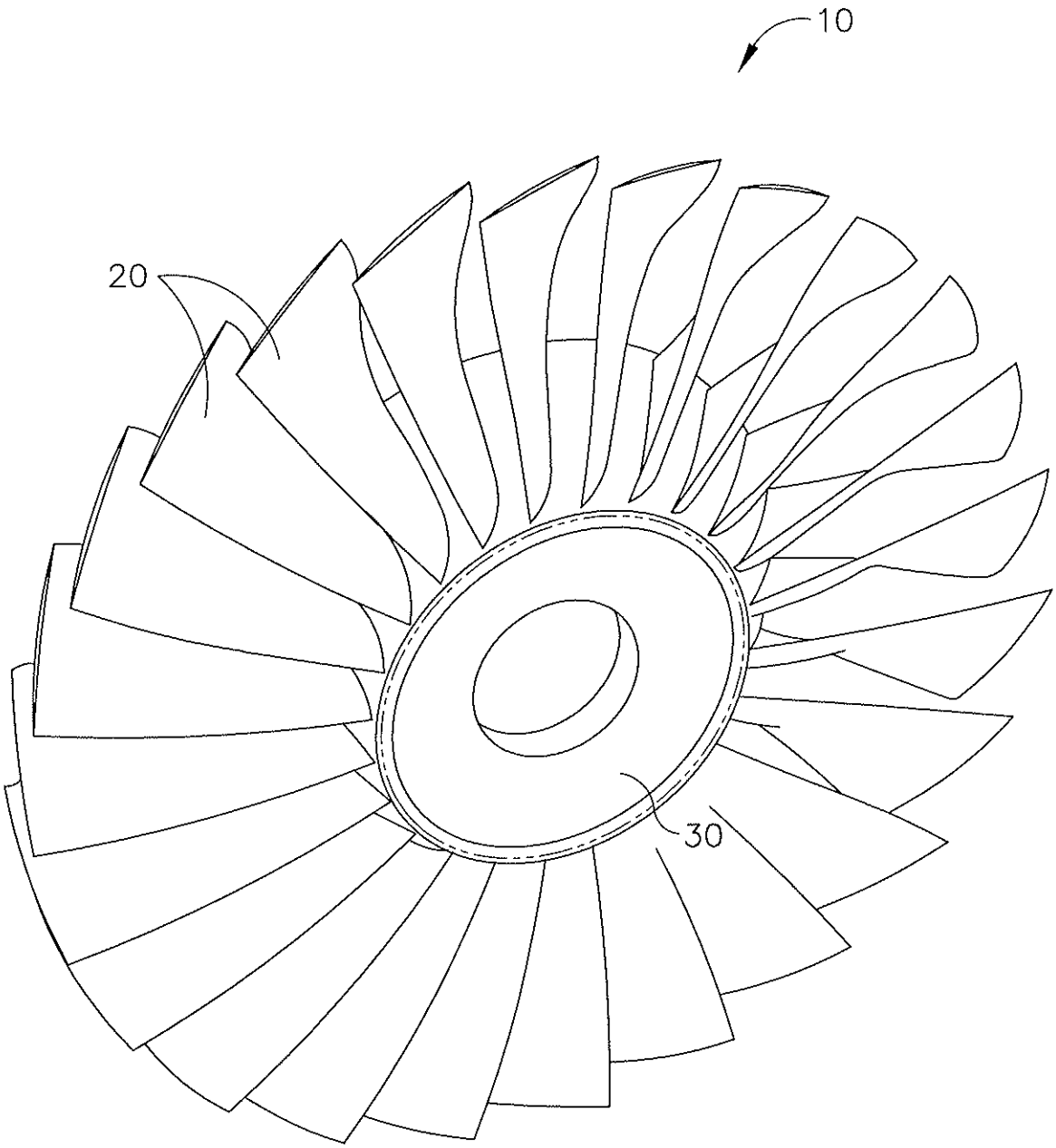

FIG. 2

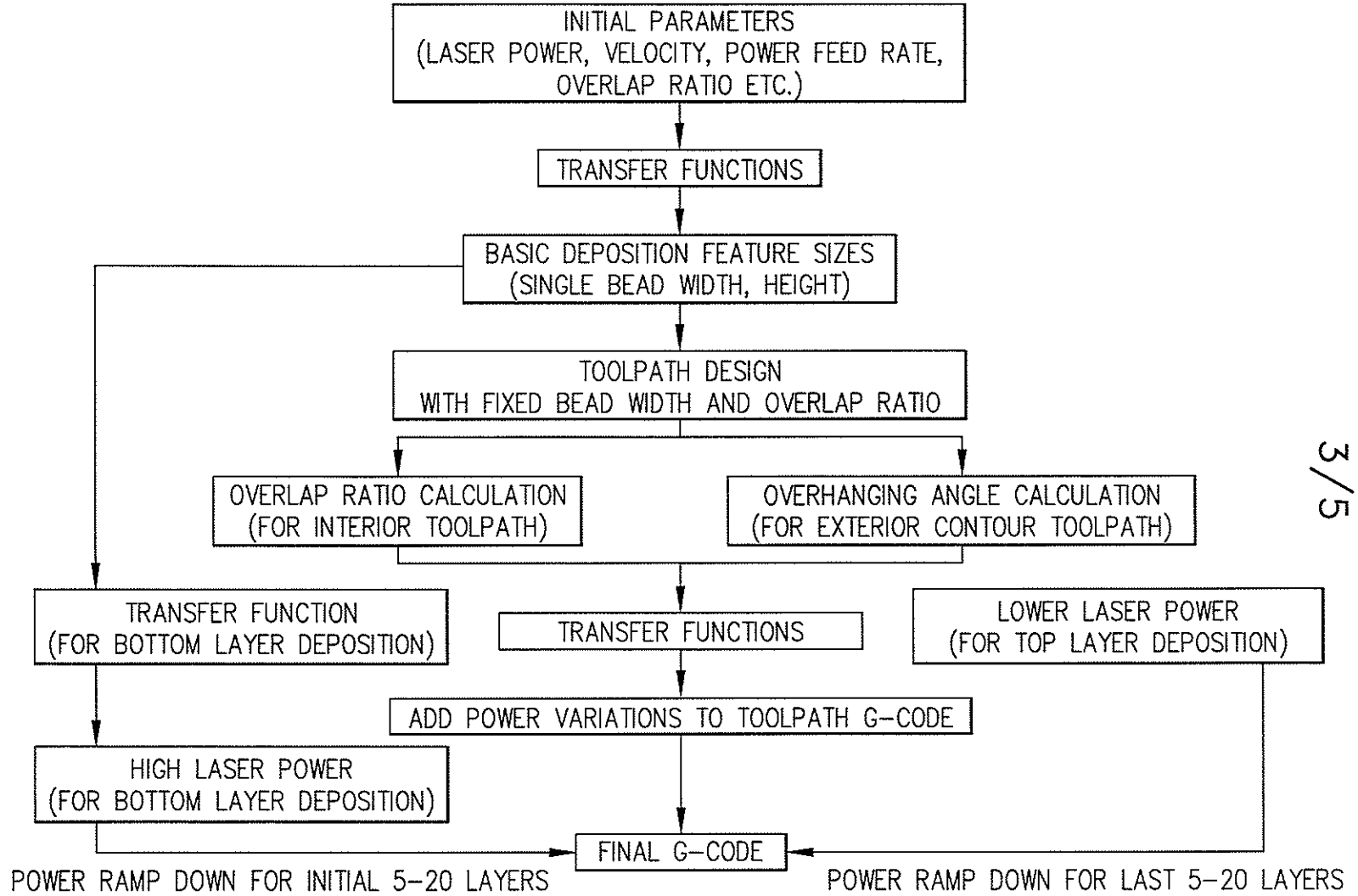
INITIAL PARAMETERS
(LASER POWER, VELOCITY, POWER FEED RATE,
OVERLAP RATIO ETC.)
TRANSFER FUNCTIONS
BASIC DEPOSITION FEATURE SIZES
(SINGLE BEAD WIDTH, HEIGHT)
TOOLPATH DESIGN
WITH FIXED BEAD WIDTH AND OVERLAP RATIO
OVERLAP RATIO CALCULATION
(FOR INTERIOR TOOLPATH)
OVERHANGING ANGLE CALCULATION
(FOR EXTERIOR CONTOUR TOOLPATH)
TRANSFER FUNCTION
(FOR BOTTOM LAYER DEPOSITION)
TRANSFER FUNCTIONS
LOWER LASER POWER
(FOR TOP LAYER DEPOSITION)
ADD POWER VARIATIONS TO TOOLPATH G-CODE
HIGH LASER POWER
(FOR BOTTOM LAYER DEPOSITION)
FINAL G-CODE
POWER RAMP DOWN FOR INITIAL 5-20 LAYERS
POWER RAMP DOWN FOR LAST 5-20 LAYERS

FIG. 3

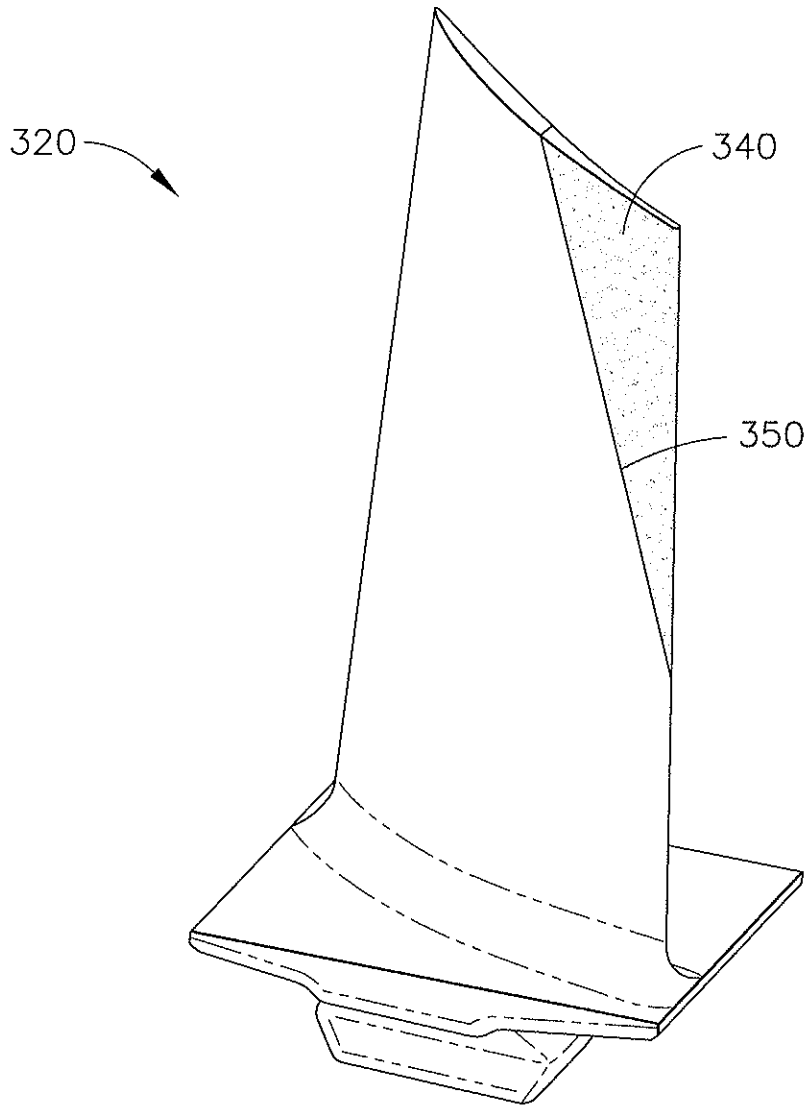

FIG. 4

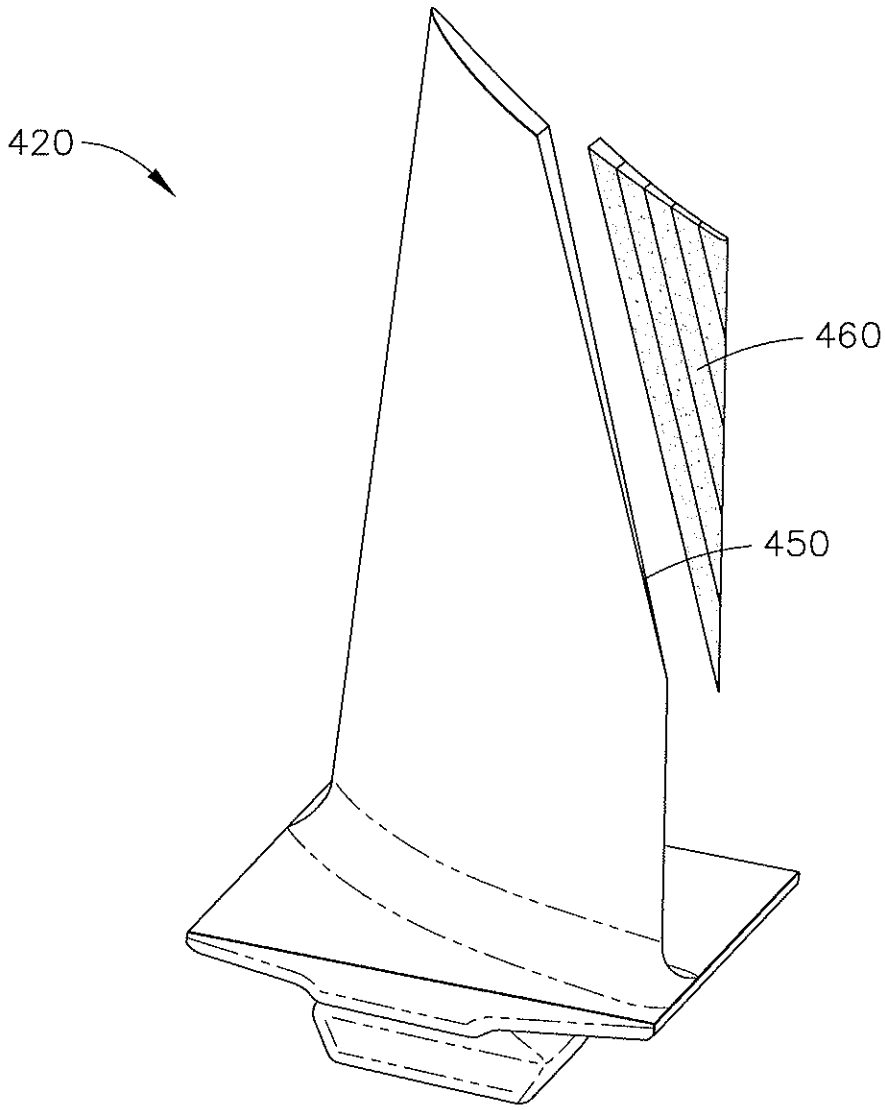

FIG. 5