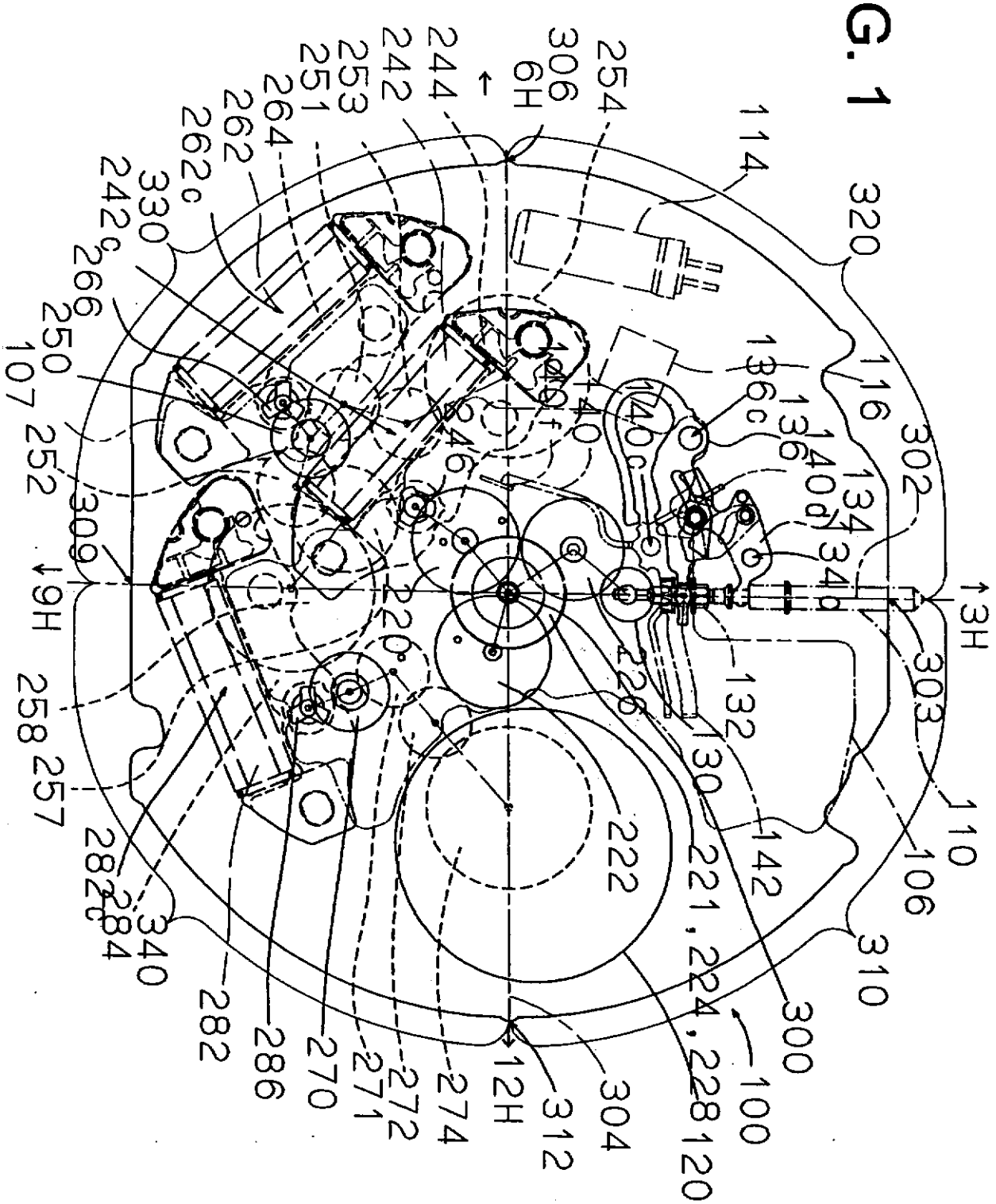
114
320
116
302
3H
303
110
106
310
300
100
120
228
221, 224, 222
142
130
132
226
220
246
140
140c
140d
136
136c
134
134d
9H
309
252
250
266
330
262c
262
264
251
253
242
244
306
6H
254
242c
107
258
257
282c
284
340
282
286
270
271
272
274
12H
312
304

FIG. 1

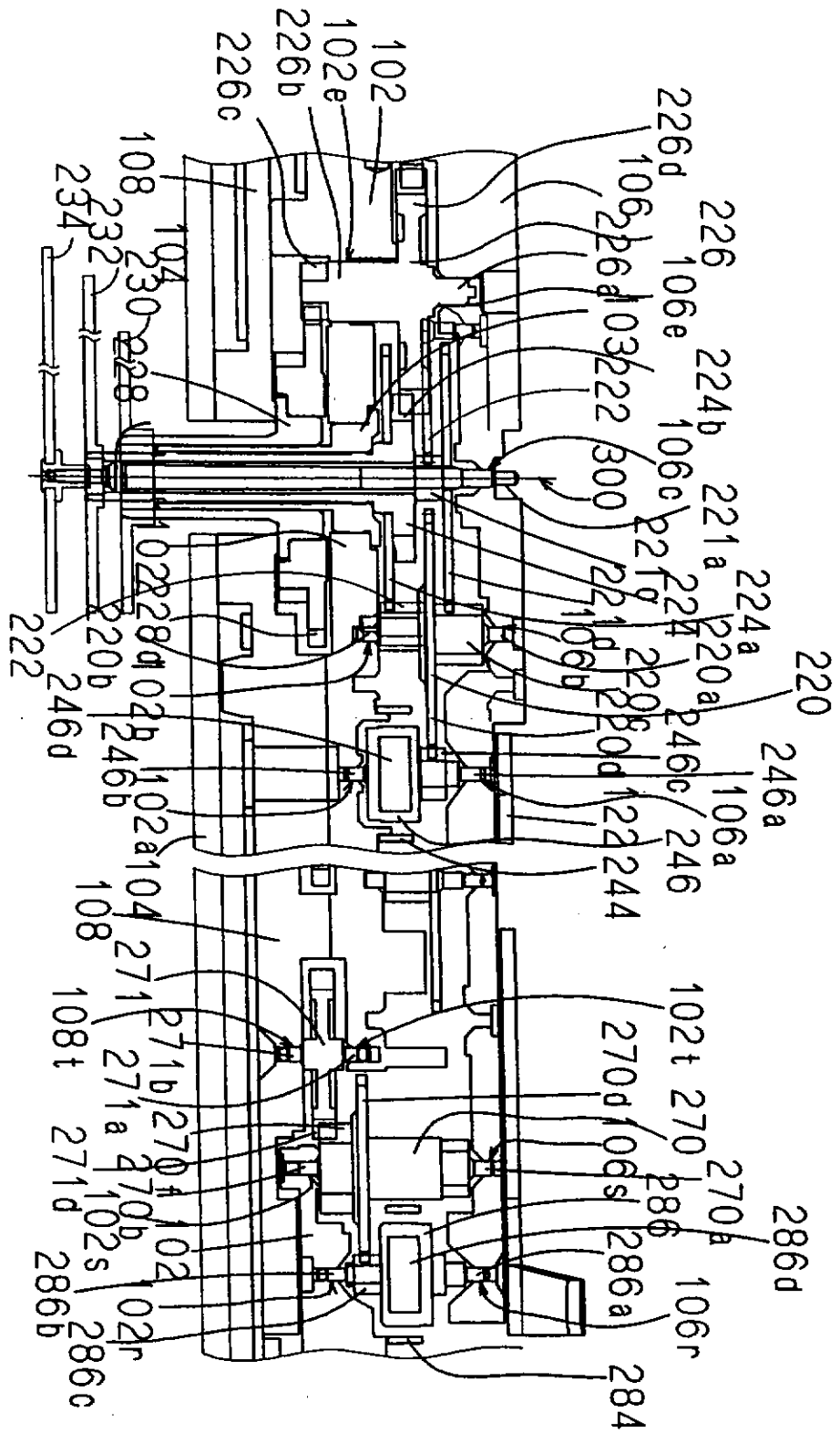
102
102e
226b
226c
226d
106
226
226a
106e
103
222
224b
106c
300
221a
221c
224
224a
220a
220
246a
106a
246
244
102t
270d
270
270a
286d
286
286a
106r
284
108
104
230
228
234
232
222
220b
246d
246b
102a
271
271b
271a
271d
102s
286b
286c
102r

FIG. 2

FIG. 3

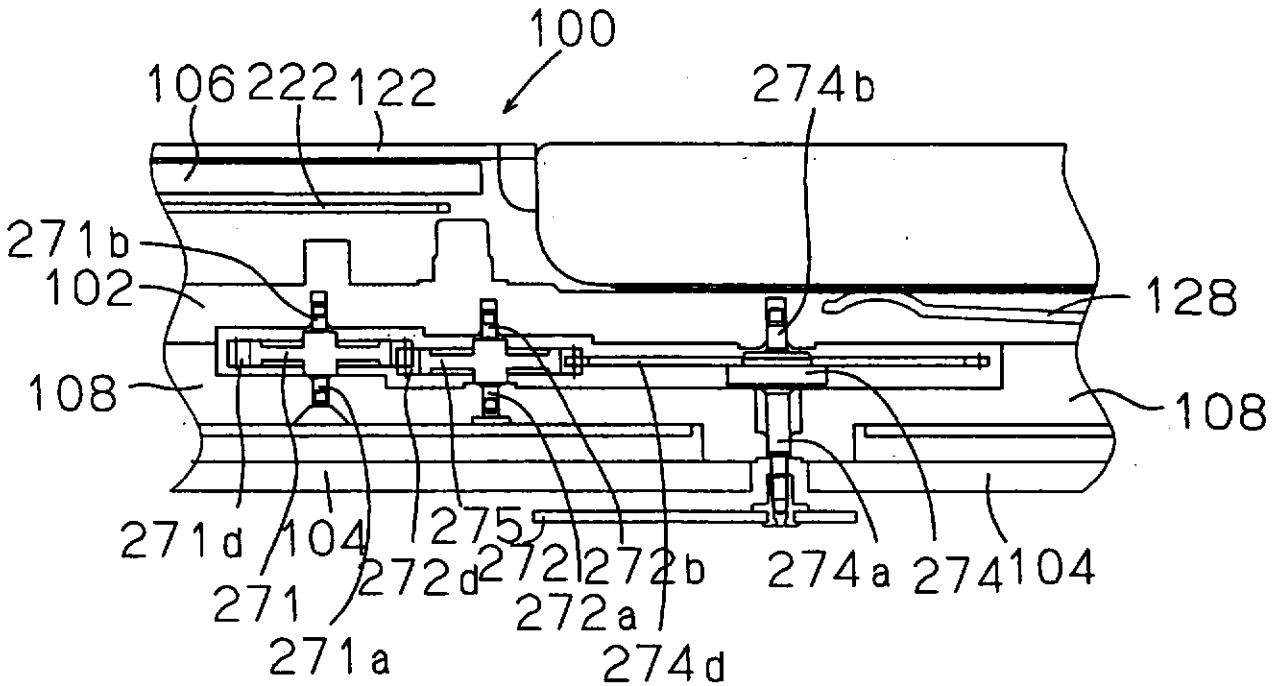
100
106
222
122
274b
271b
102
128
108
108
271d
104
275
271
272d
272
272b
274a
274
104
272a
271a
274d

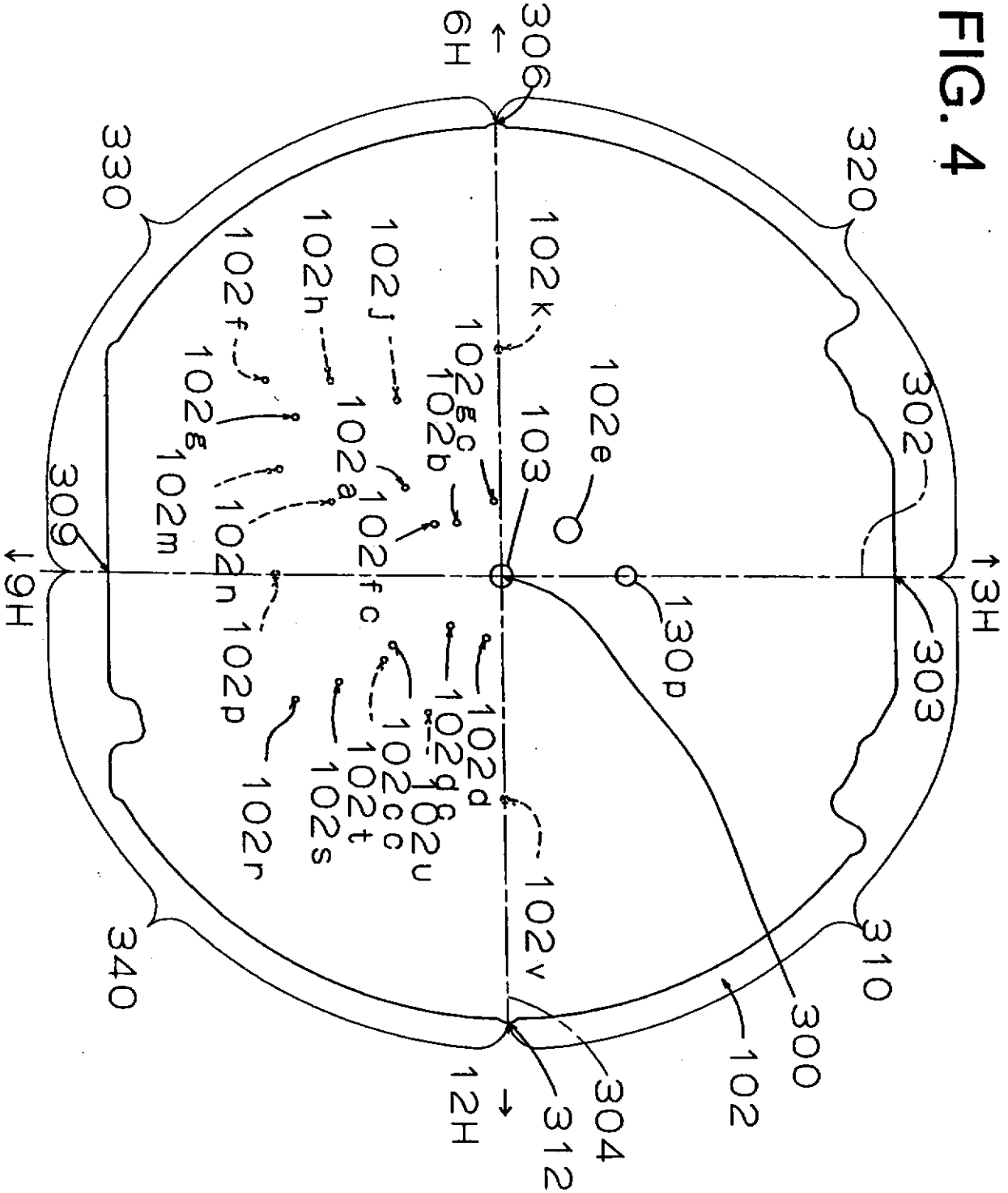
306
6H
330
320
102k
102j
102h
102f
102g
102m
102a
102b
102gc
102e
103
302
309
9H
3H
102n
102fc
130p
303
102p
102d
102dc
102u
102cc
102t
102s
102r
102v
340
310
300
102
304
312
12H

FIG. 4

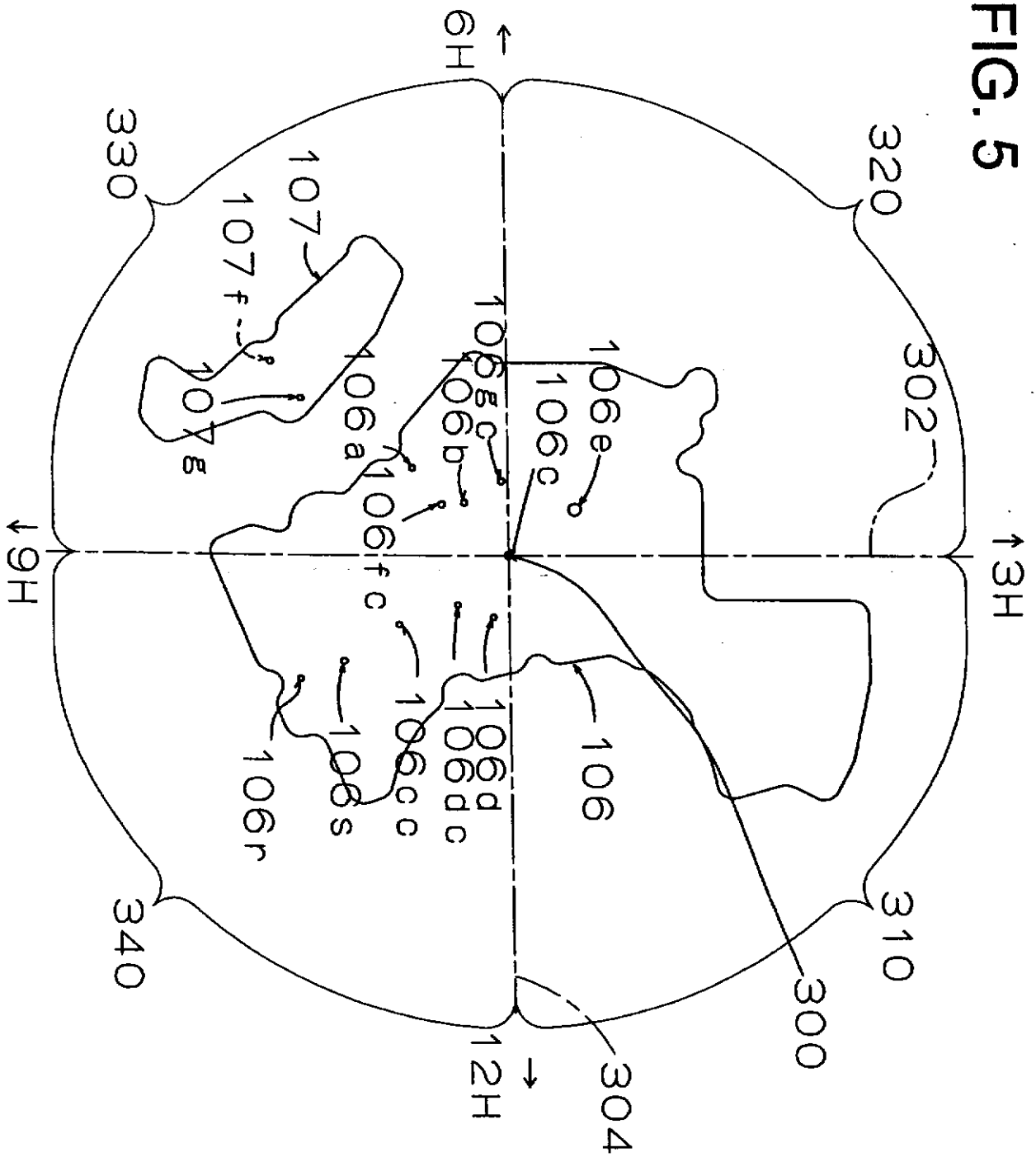
6H
3H
9H
12H
320
330
340
310
302
300
304
106
106a
106b
106c
106d
106e
106f
106g
106dc
106cc
106fc
106s
106r
107
107f
107g

FIG. 5

FIG. 6

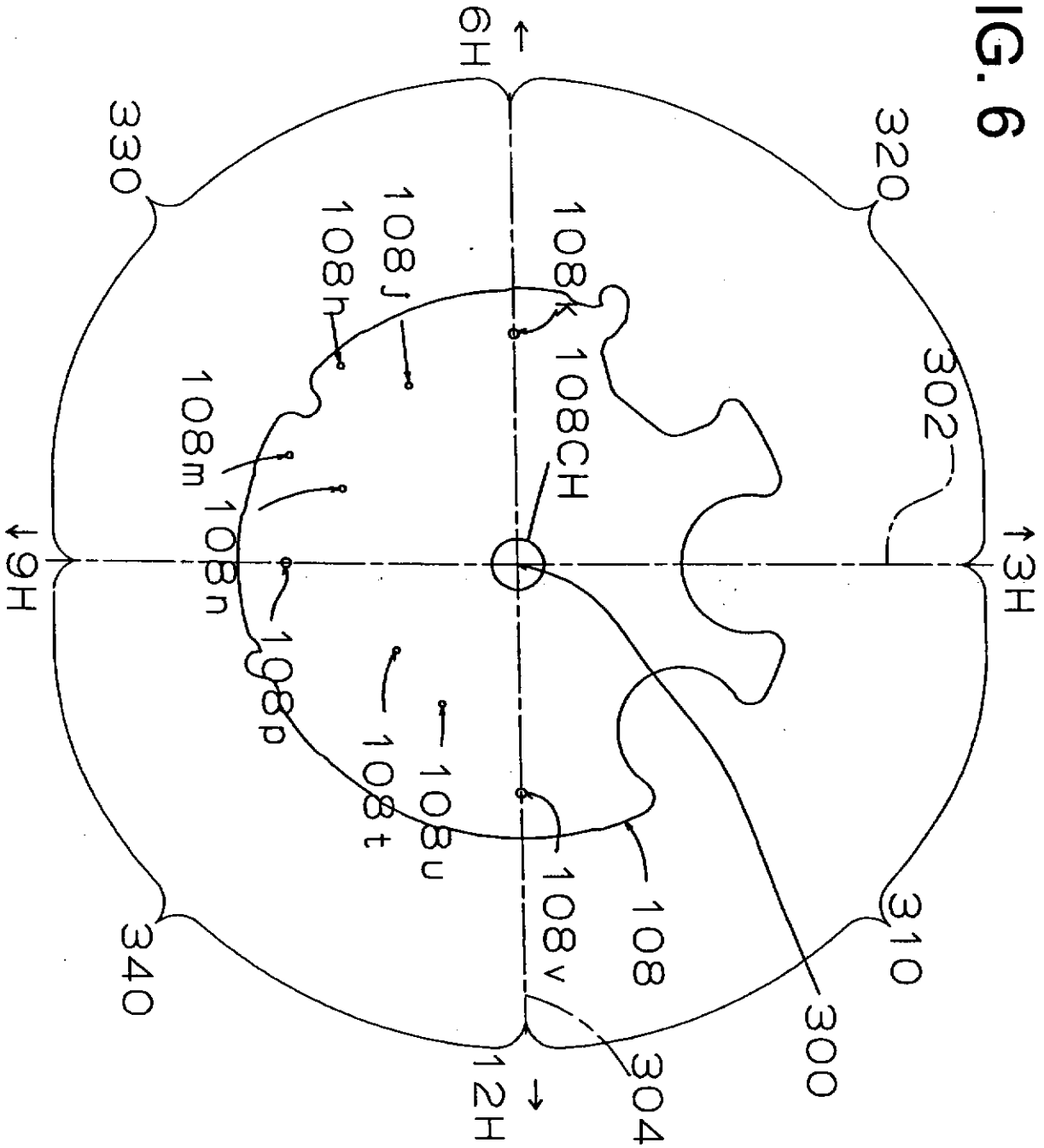
6H
330
320
108J
108h
108k
108CH
302
108m
108n
9H
3H
108p
108t
108u
108v
108
310
340
300
12H
304

FIG.7

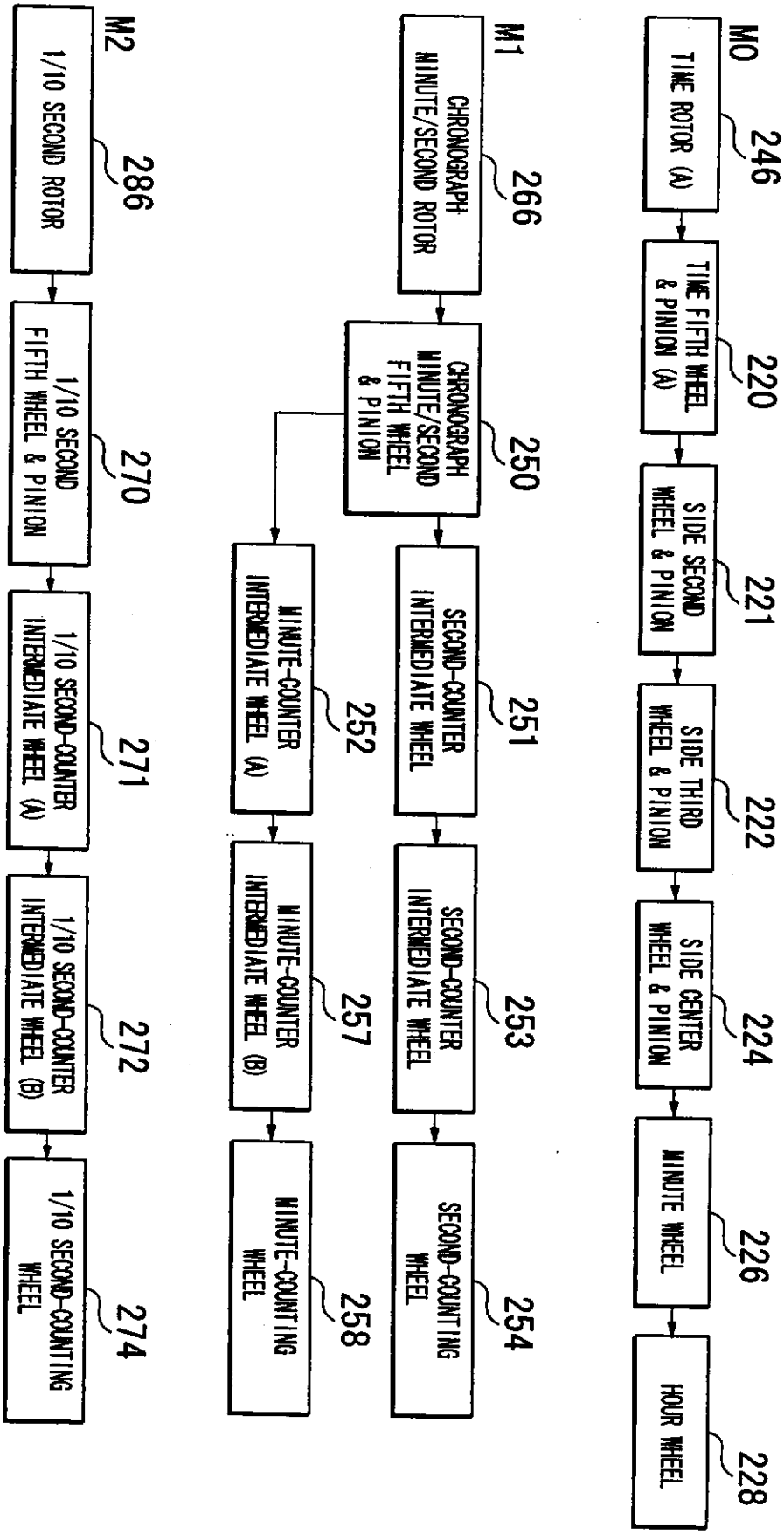
SIDE CHRONOGRAPH
M0
TIME ROTOR (A)
246
TIME FIFTH WHEEL & PINION (A)
220
SIDE SECOND WHEEL & PINION
221
SIDE THIRD WHEEL & PINION
222
SIDE CENTER WHEEL & PINION
224
MINUTE WHEEL
226
HOUR WHEEL
228
M1
CHRONOGRAPH MINUTE/SECOND ROTOR
266
CHRONOGRAPH MINUTE/SECOND FIFTH WHEEL & PINION
250
SECOND-COUNTER INTERMEDIATE WHEEL
251
SECOND-COUNTING WHEEL
254
MINUTE-COUNTER INTERMEDIATE WHEEL (A)
252
MINUTE-COUNTER INTERMEDIATE WHEEL (B)
257
MINUTE-COUNTING WHEEL
258
M2
1/10 SECOND ROTOR
286
1/10 SECOND FIFTH WHEEL & PINION
270
1/10 SECOND-COUNTER INTERMEDIATE WHEEL (A)
271
1/10 SECOND-COUNTER INTERMEDIATE WHEEL (B)
272
1/10 SECOND-COUNTING WHEEL
274

FIG. 8

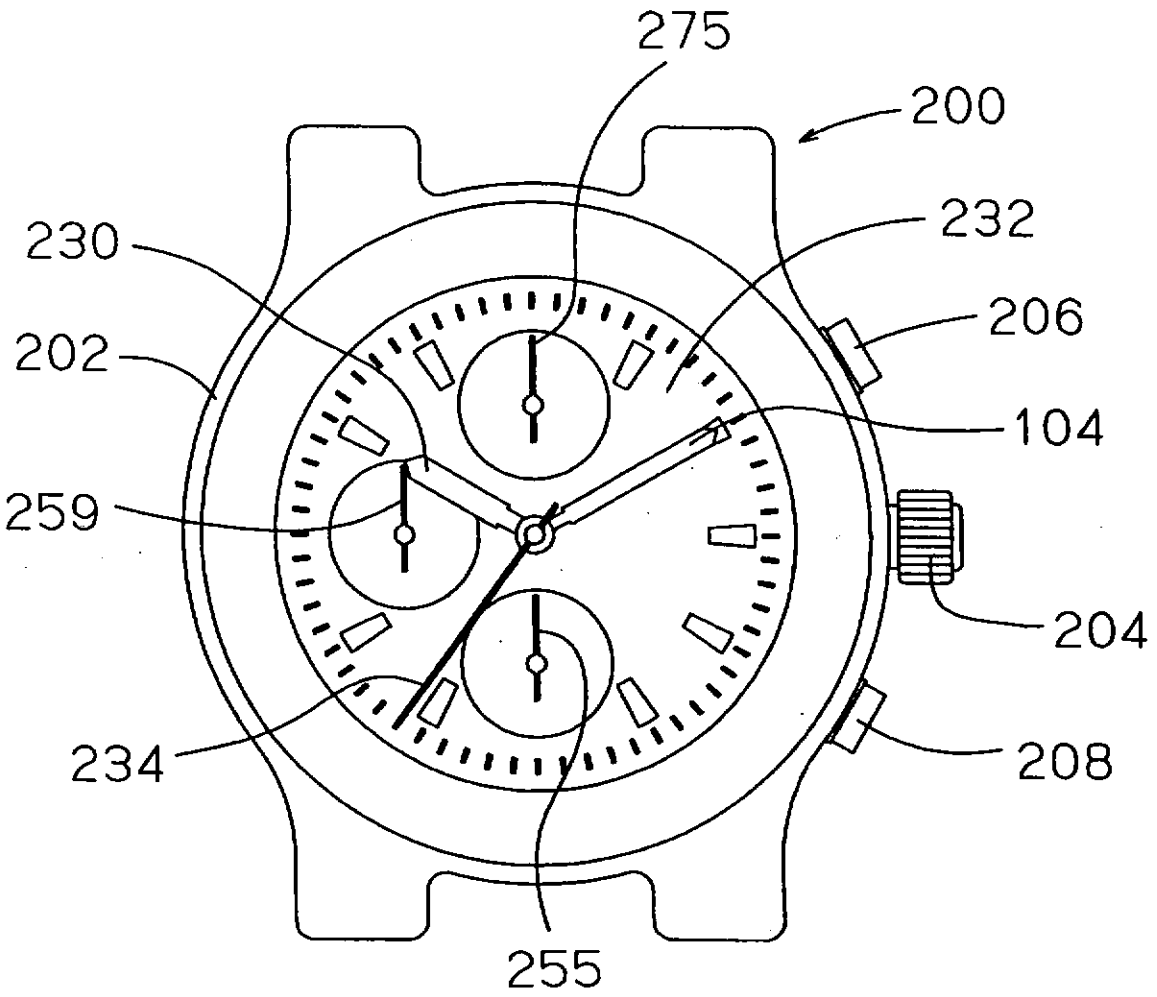

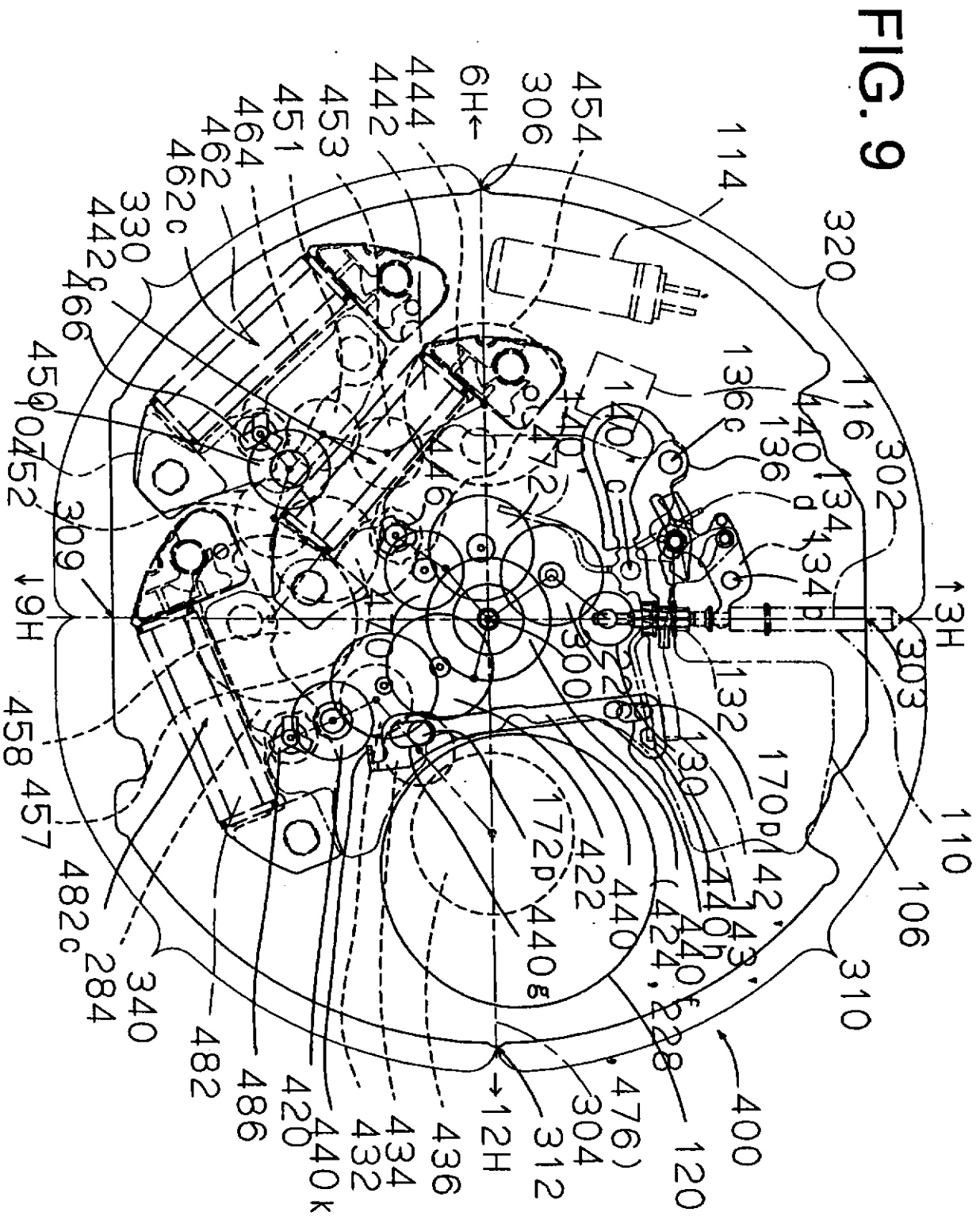
6H
9H
3H
12H
114
116
320
302
303
110
106
310
400
120
312
304
476
228
424
440f
440h
143
142
170p
130
132
300
226
134p
134d
136
136c
140c
472
446
454
306
444
442
453
451
464
462
462c
330
442c
466
450
452
309
458
457
482c
284
340
482
486
420
440k
432
434
436
440g
422
172p

FIG. 9

FIG. 10

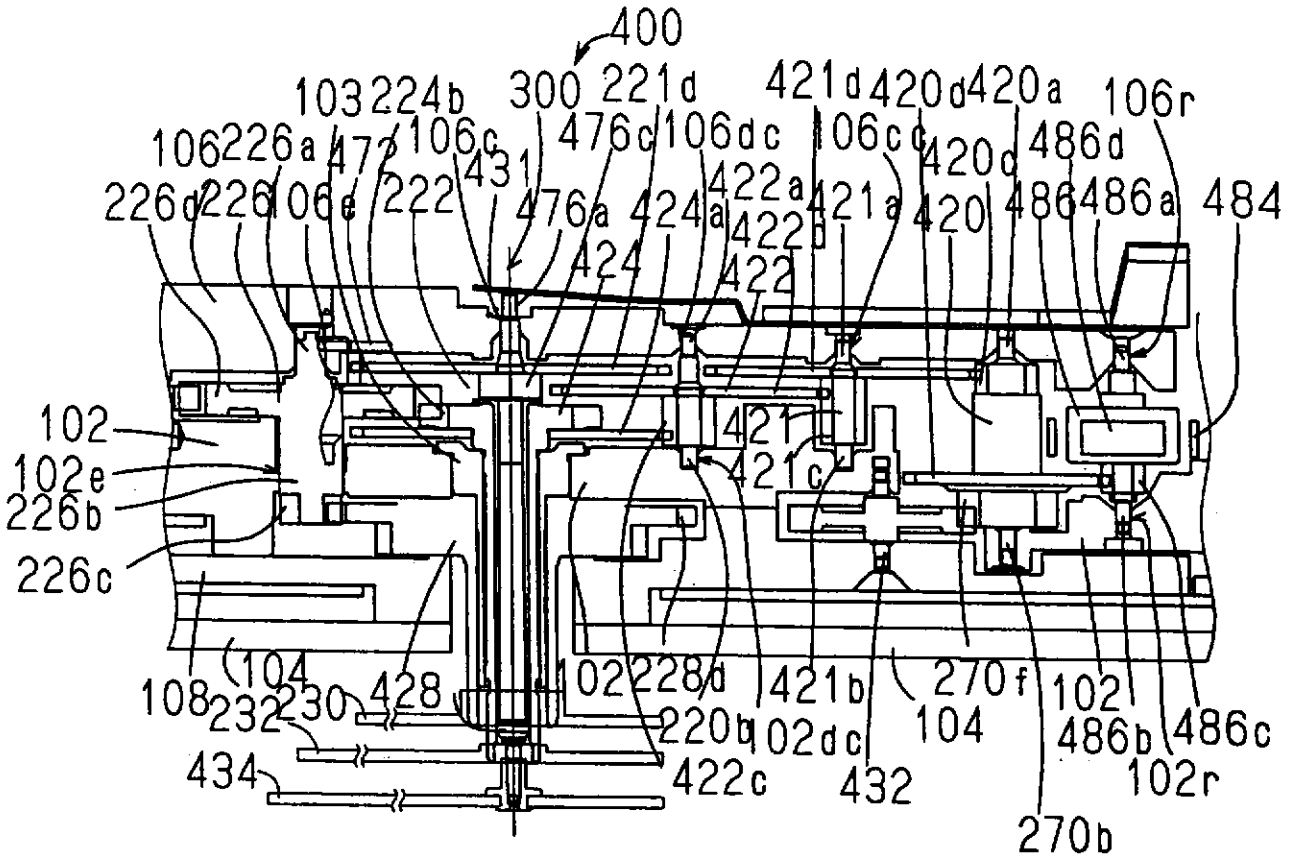
400
103
224b
300
221d
421d
420d
420a
106r
106
226a
472
106c
476c
106dc
106cc
420d
486d
226d
226
106e
222
431
476a
424a
422a
421a
420
486
486a
484
424
422
102
421
102e
421c
226b
226c
104
108
232
230
428
102
228d
421b
270f
102
220b
102dc
104
486b
486c
434
422c
432
102r
270b

FIG. 11

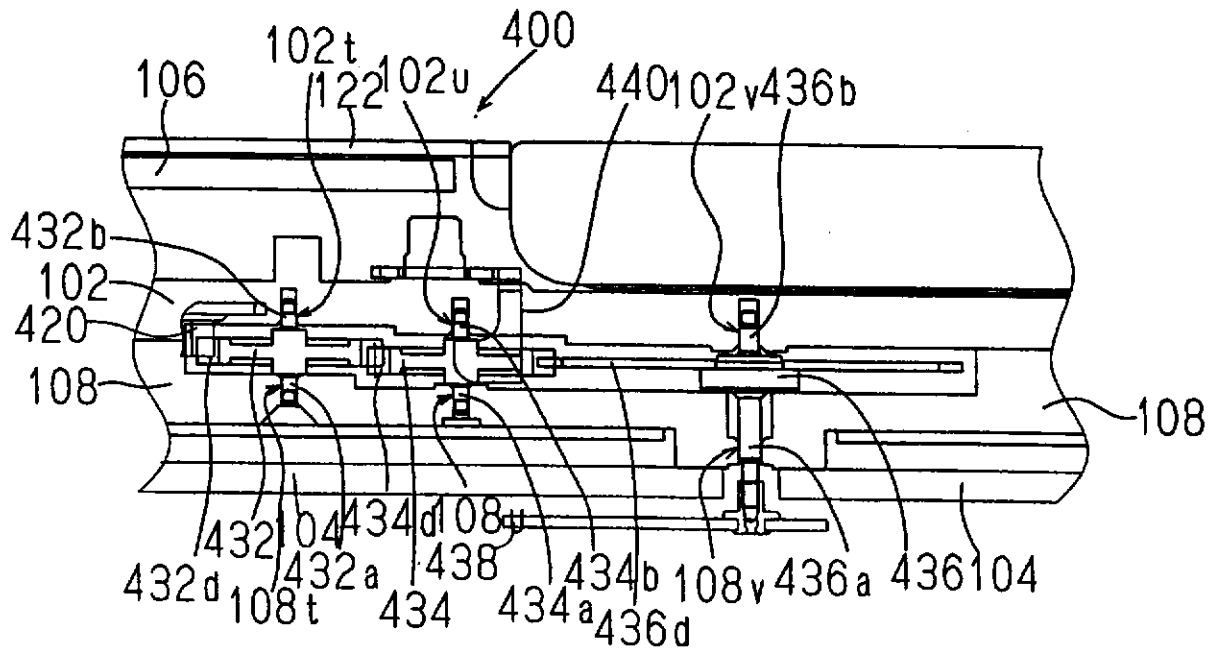
102t
400
106
122
102u
440
102v
436b
432b
102
420
108
108
432
104
434d
108u
432d
432a
438
434b
108v
436a
436
104
108t
434
434a
436d

FIG.12

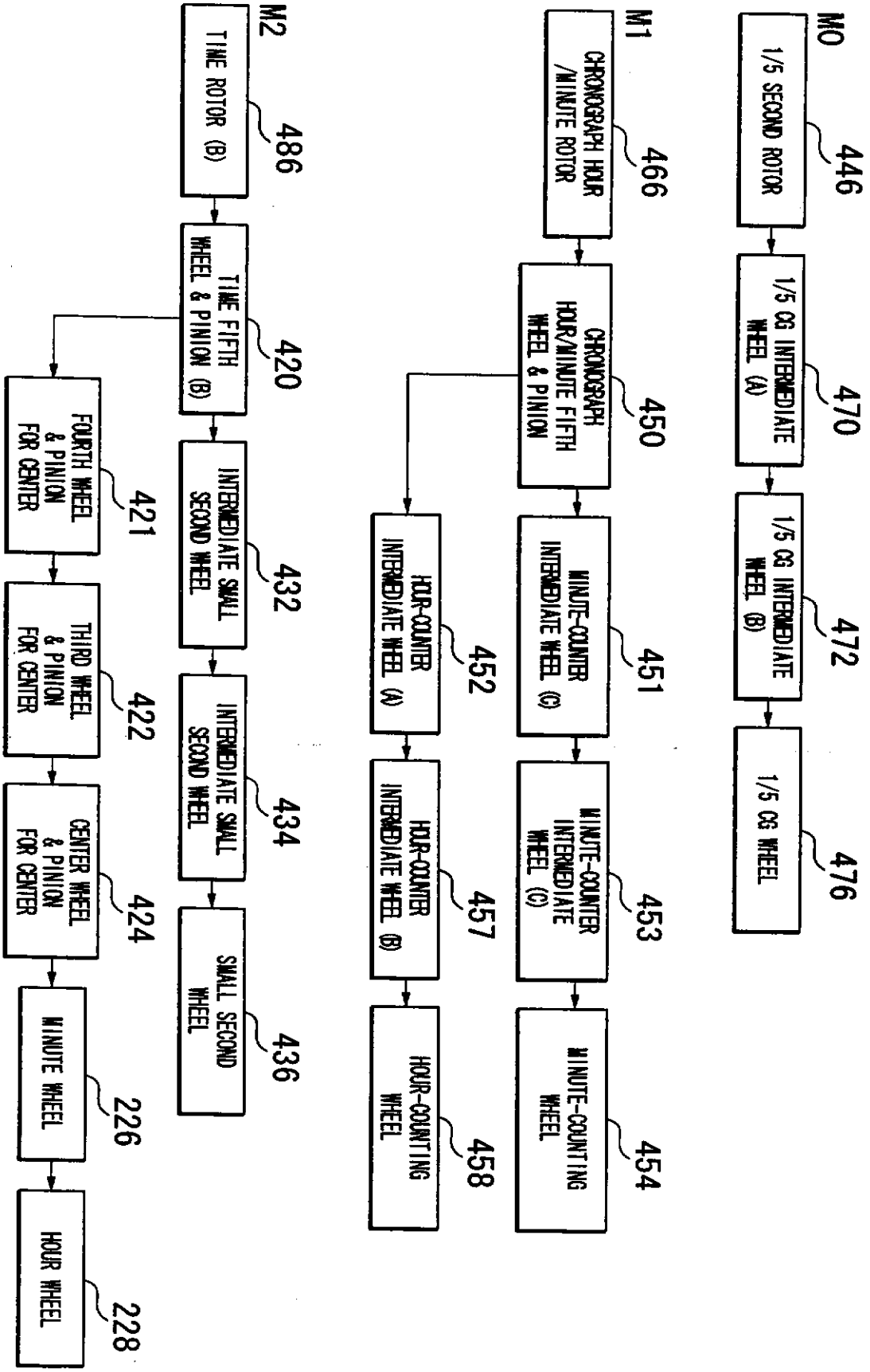
CENTER CHRONOGRAPH
M0
1/5 SECOND ROTOR
446
1/5 CG INTERMEDIATE WHEEL (A)
470
1/5 CG INTERMEDIATE WHEEL (B)
472
1/5 CG WHEEL
476
M1
CHRONOGRAPH HOUR /MINUTE ROTOR
466
CHRONOGRAPH HOUR/MINUTE FIFTH WHEEL & PINION
450
MINUTE-COUNTER INTERMEDIATE WHEEL (C)
451
MINUTE-COUNTER INTERMEDIATE WHEEL (C)
453
MINUTE-COUNTING WHEEL
454
HOUR-COUNTER INTERMEDIATE WHEEL (A)
452
HOUR-COUNTER INTERMEDIATE WHEEL (B)
457
HOUR-COUNTING WHEEL
458
M2
TIME ROTOR (B)
486
TIME FIFTH WHEEL & PINION (B)
420
INTERMEDIATE SMALL SECOND WHEEL
432
INTERMEDIATE SMALL SECOND WHEEL
434
SMALL SECOND WHEEL
436
FOURTH WHEEL & PINION FOR CENTER
421
THIRD WHEEL & PINION FOR CENTER
422
CENTER WHEEL & PINION FOR CENTER
424
MINUTE WHEEL
226
HOUR WHEEL
228

FIG. 13

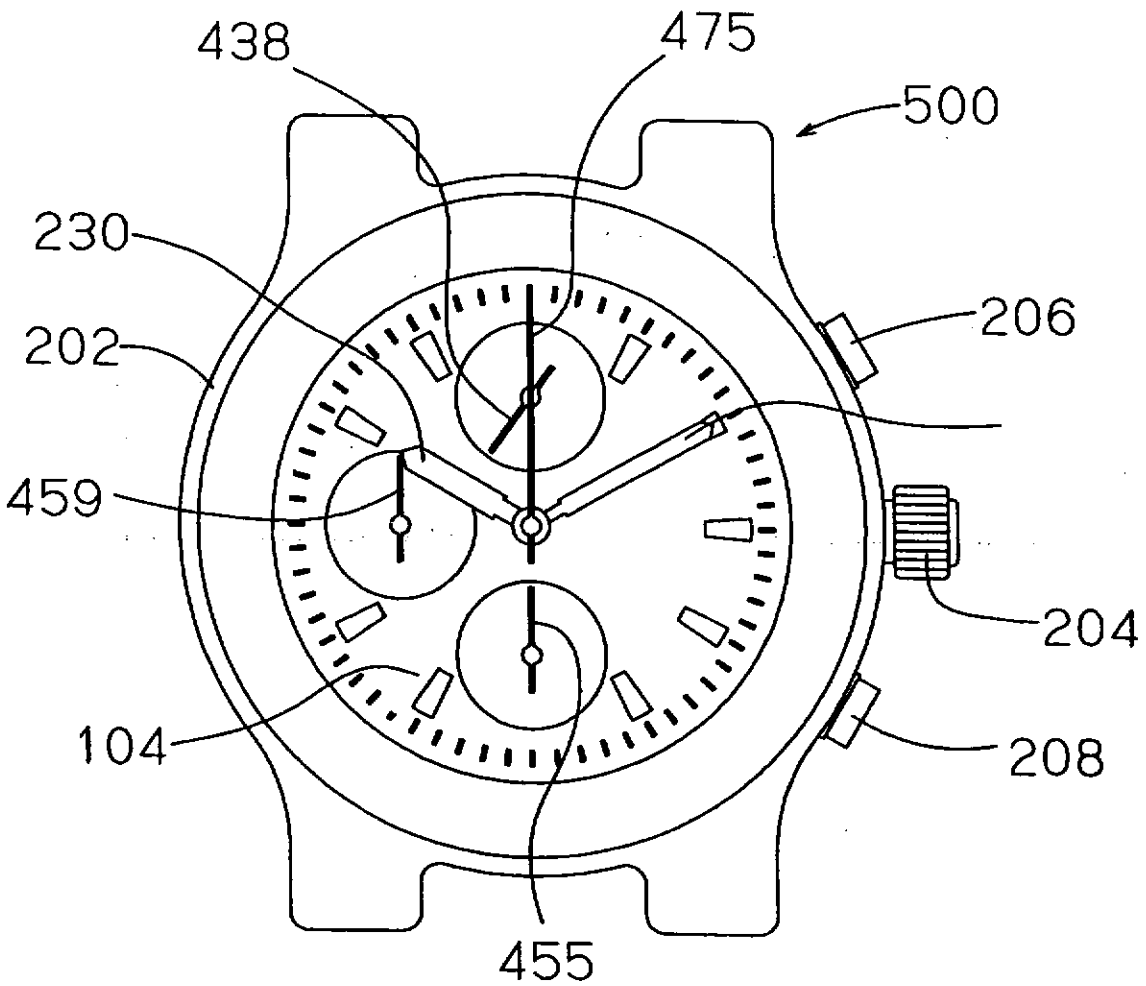

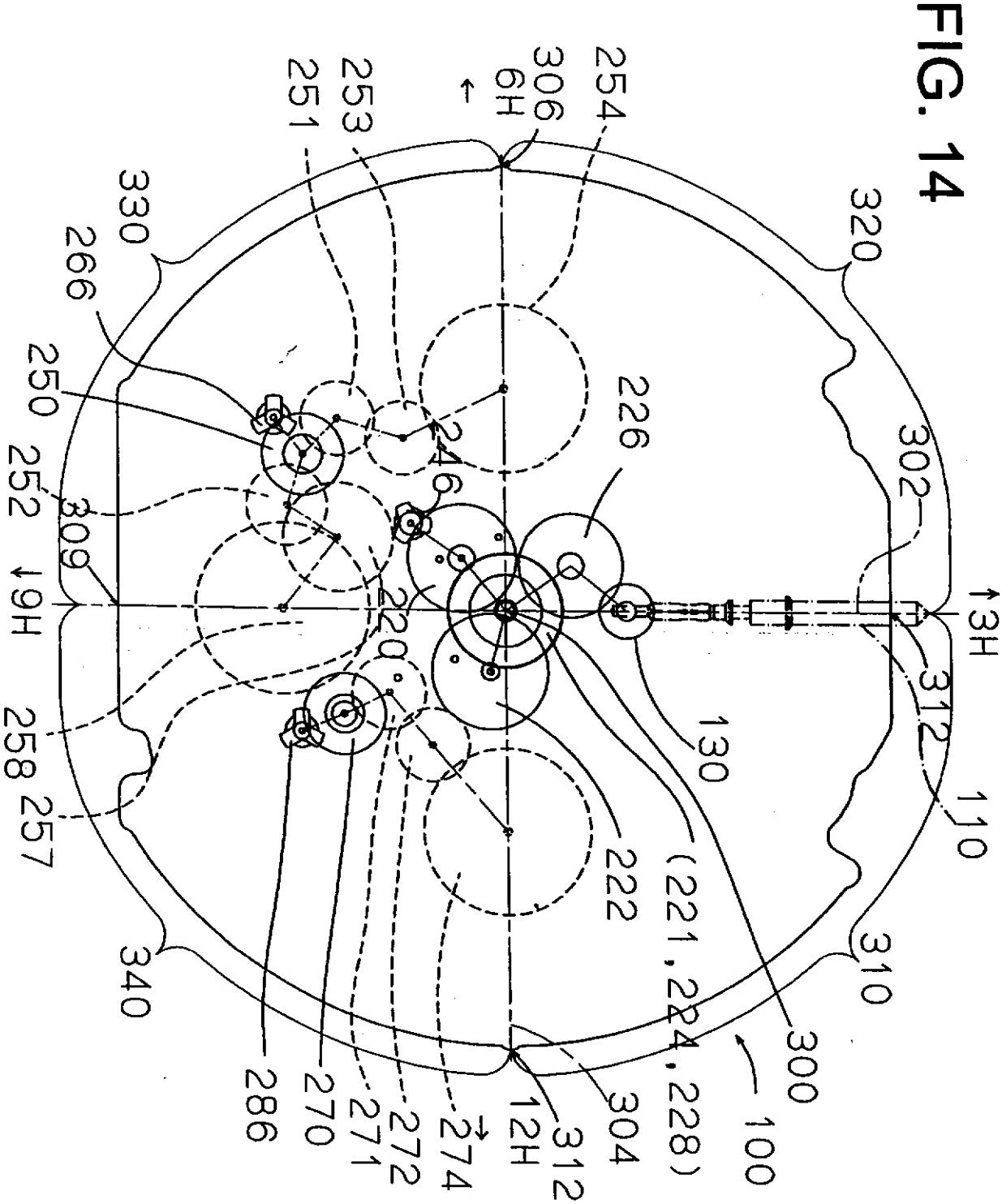
306
6H
254
253
251
330
320
266
250
226
246
302
252
309
9H
220
3H
312
130
258
257
110
222
(221, 224, 228)
340
310
300
286
270
271
272
274
12H
312
304
100

FIG. 14

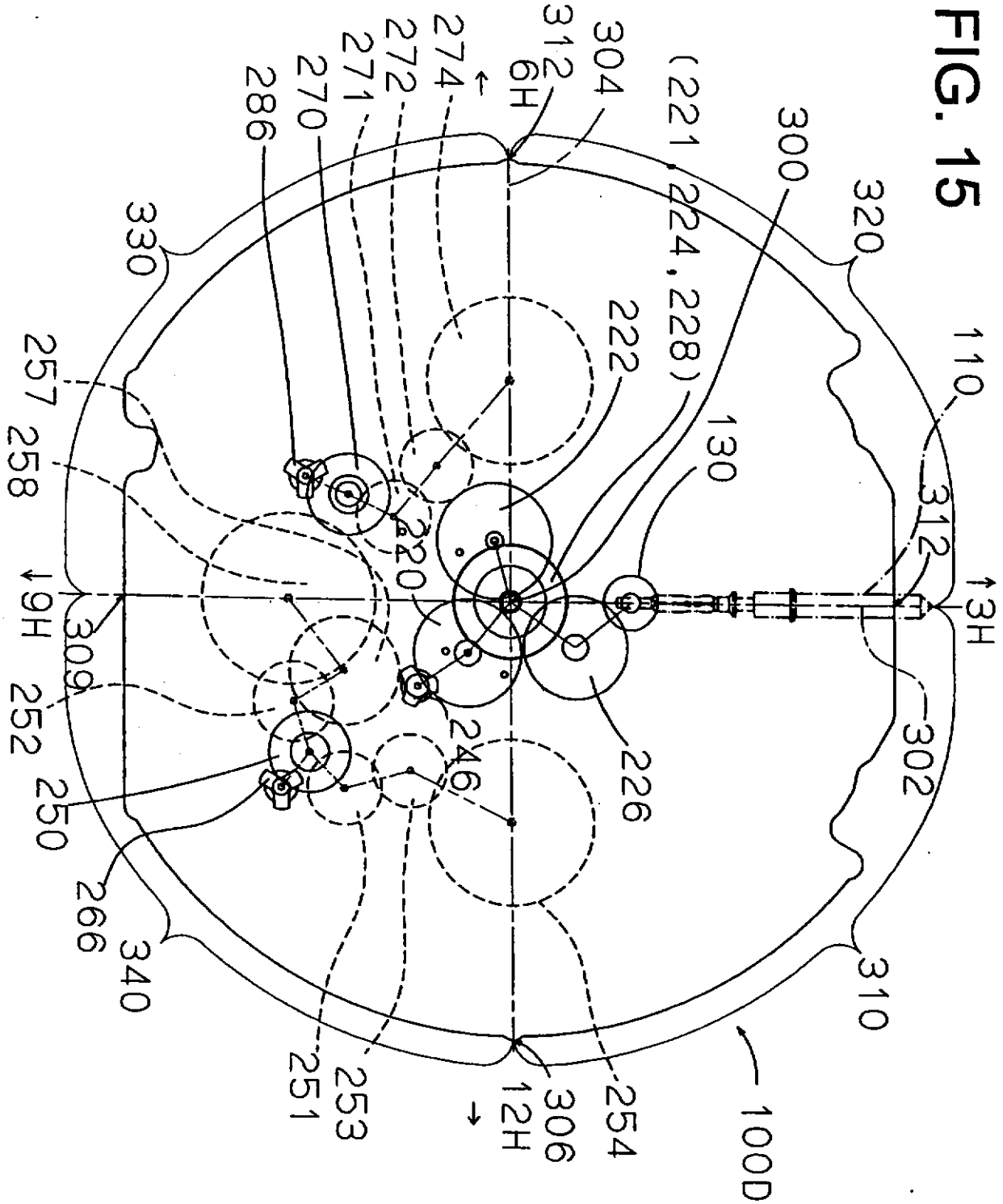
312
6H
304
(221,224,228)
300
320
110
312
3H
302
310
100D
254
306
12H
253
251
340
266
250
252
309
9H
258
257
330
286
270
271
272
274
222
130
220
226
246

FIG. 15

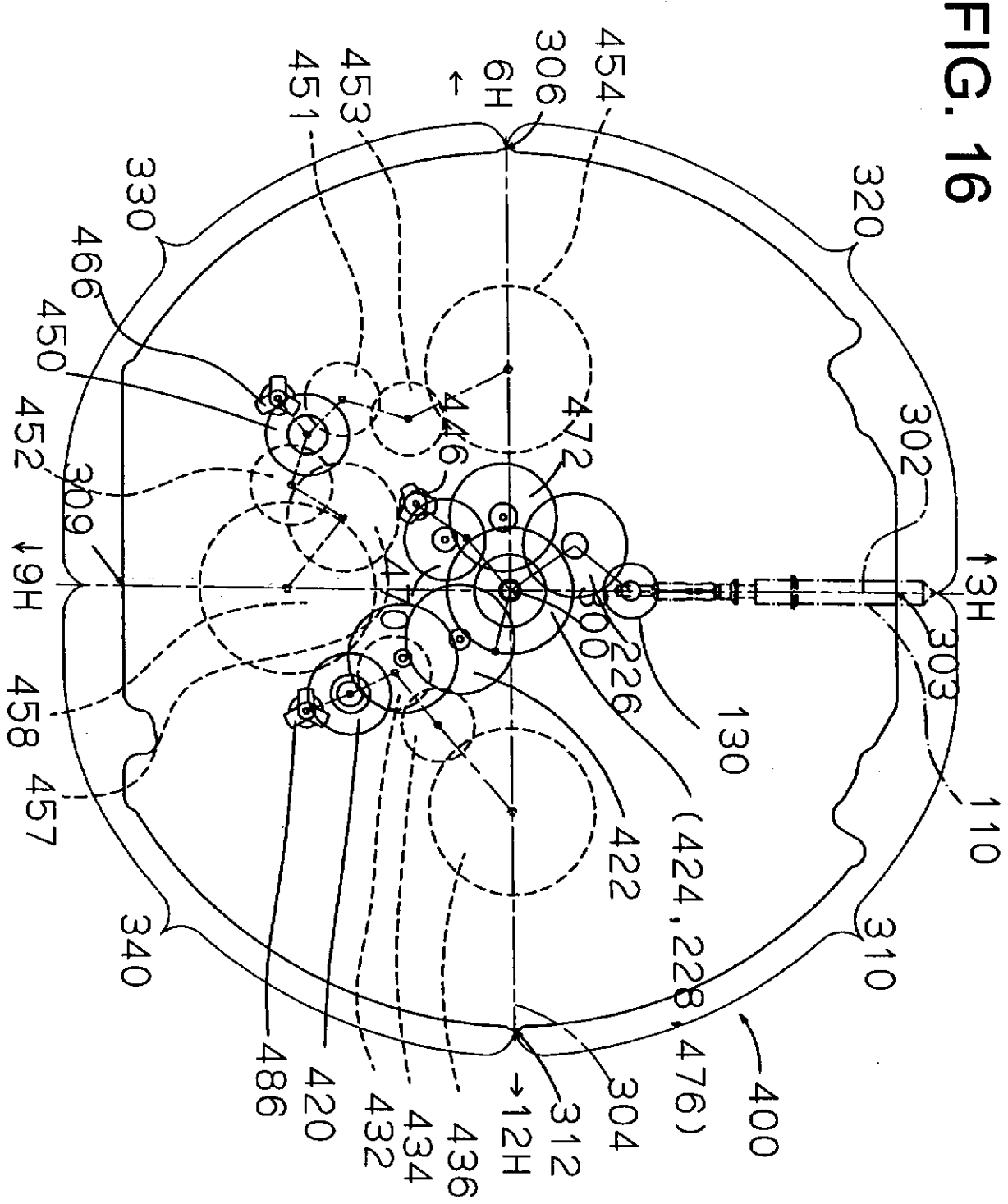
6H
306
454
453
451
330
320
466
450
452
309
9H
446
472
302
3H
470
300
226
303
458
457
130
110
422
(424, 228, 476)
340
310
486
420
432
434
436
12H
312
304
400

FIG. 16

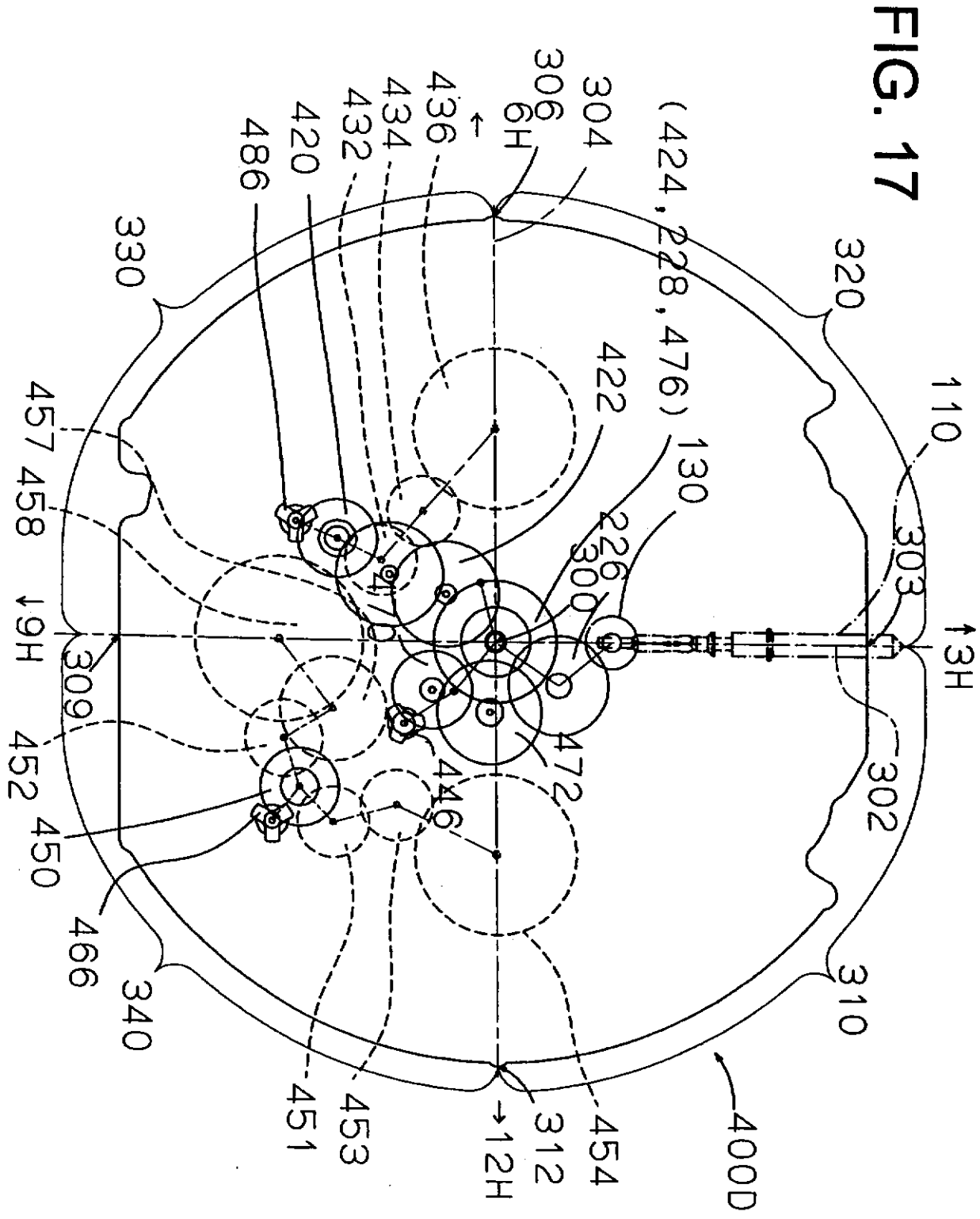
(424,228,476)
304
306
6H
436
434
432
420
486
330
320
110
130
422
226
300
303
3H
302
310
400D
454
312
12H
453
451
340
466
450
452
309
9H
458
457
472
446

FIG. 17

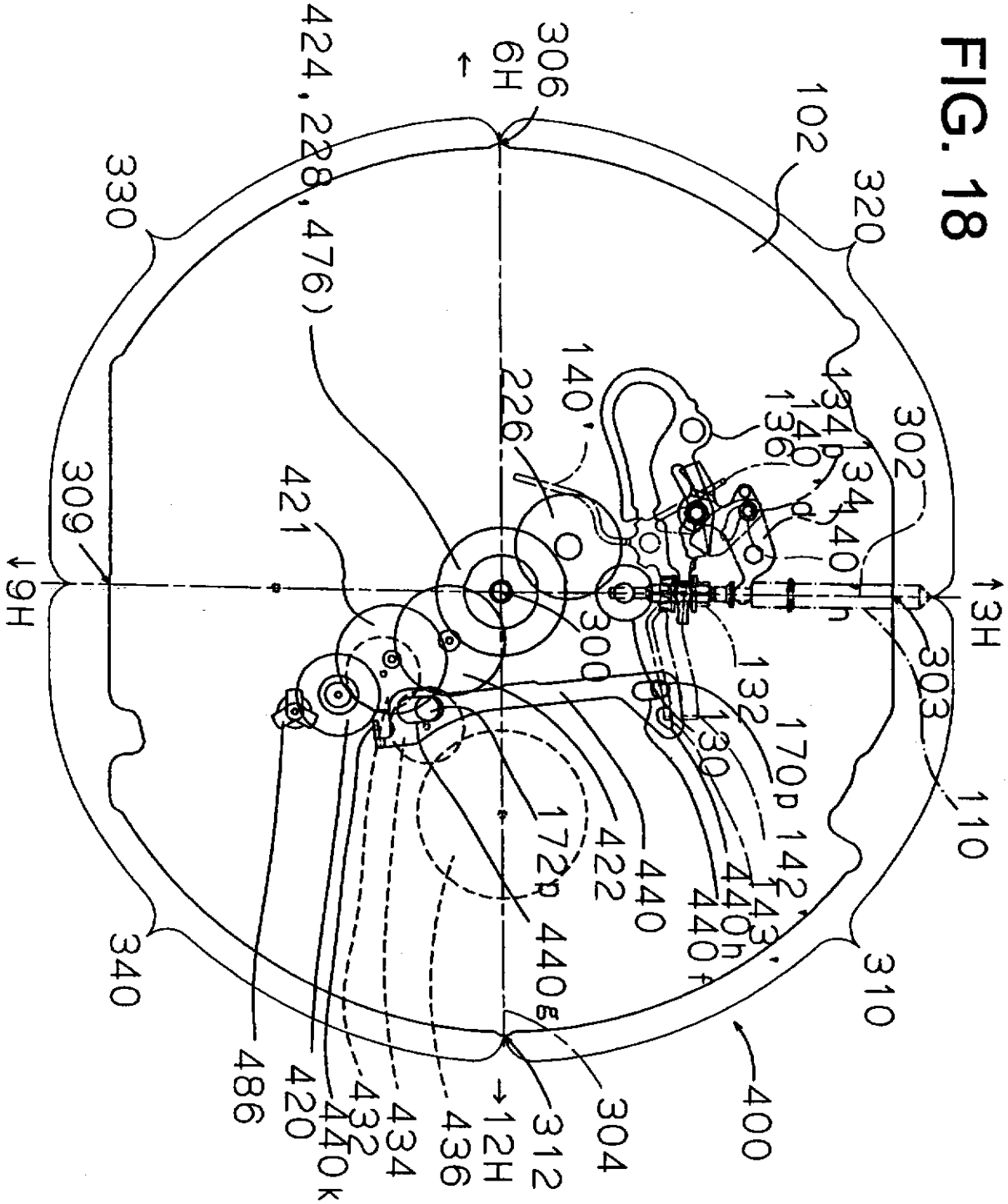
306
6H
102
320
330
(424,228,476)
140'
226
134p
140
136
302
134
140'
d
309
421
9H
3H
300
132
303
130
170p
110
172p
422
440
142'
143'
440h
440f
340
310
440g
486
420
440k
432
434
436
12H
312
304
400

FIG. 18

FIG. 19

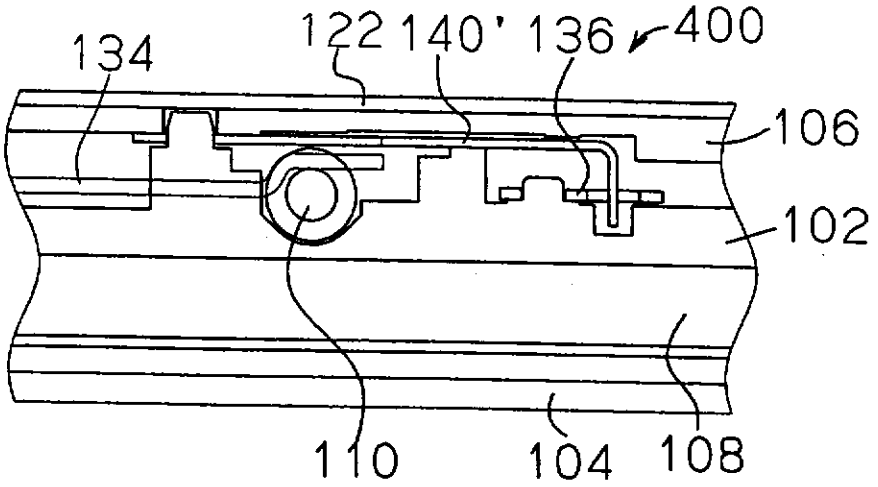

FIG. 20

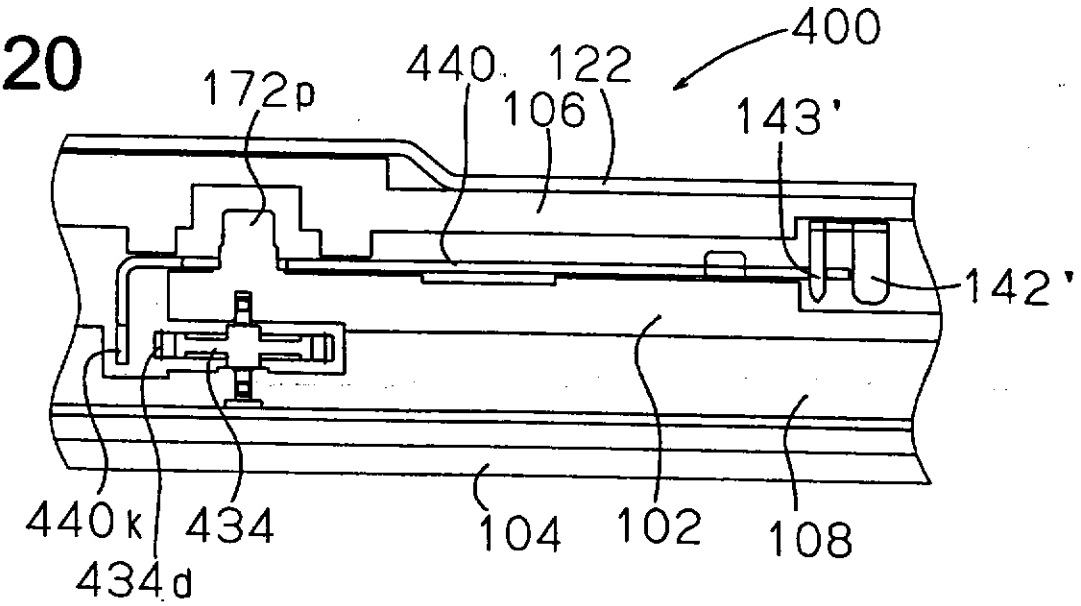

FIG. 21

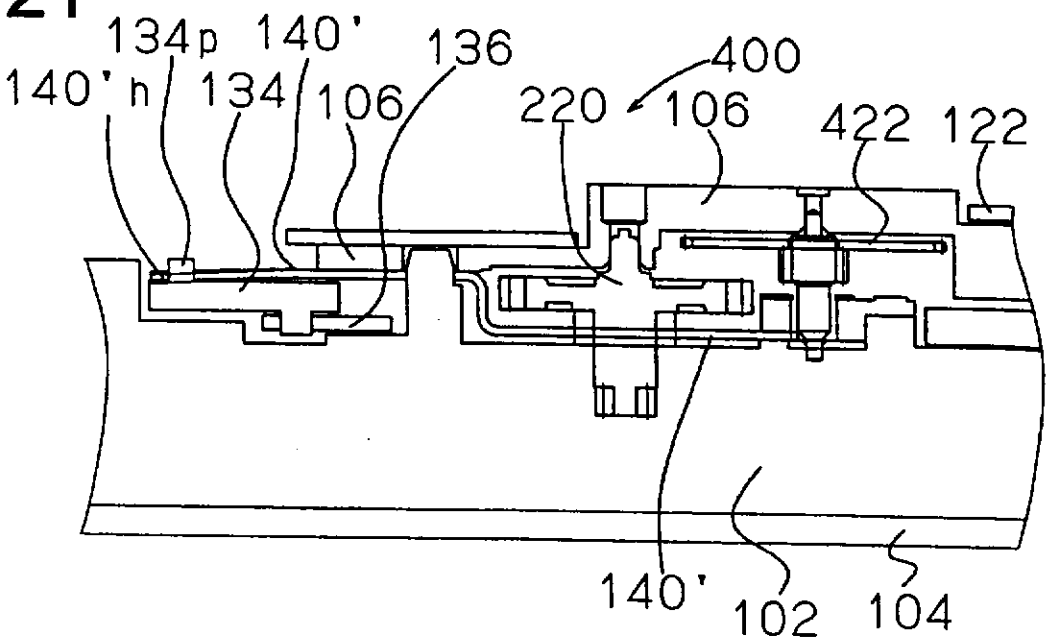

REPLACEMENT SHEET
07 AUG 2003

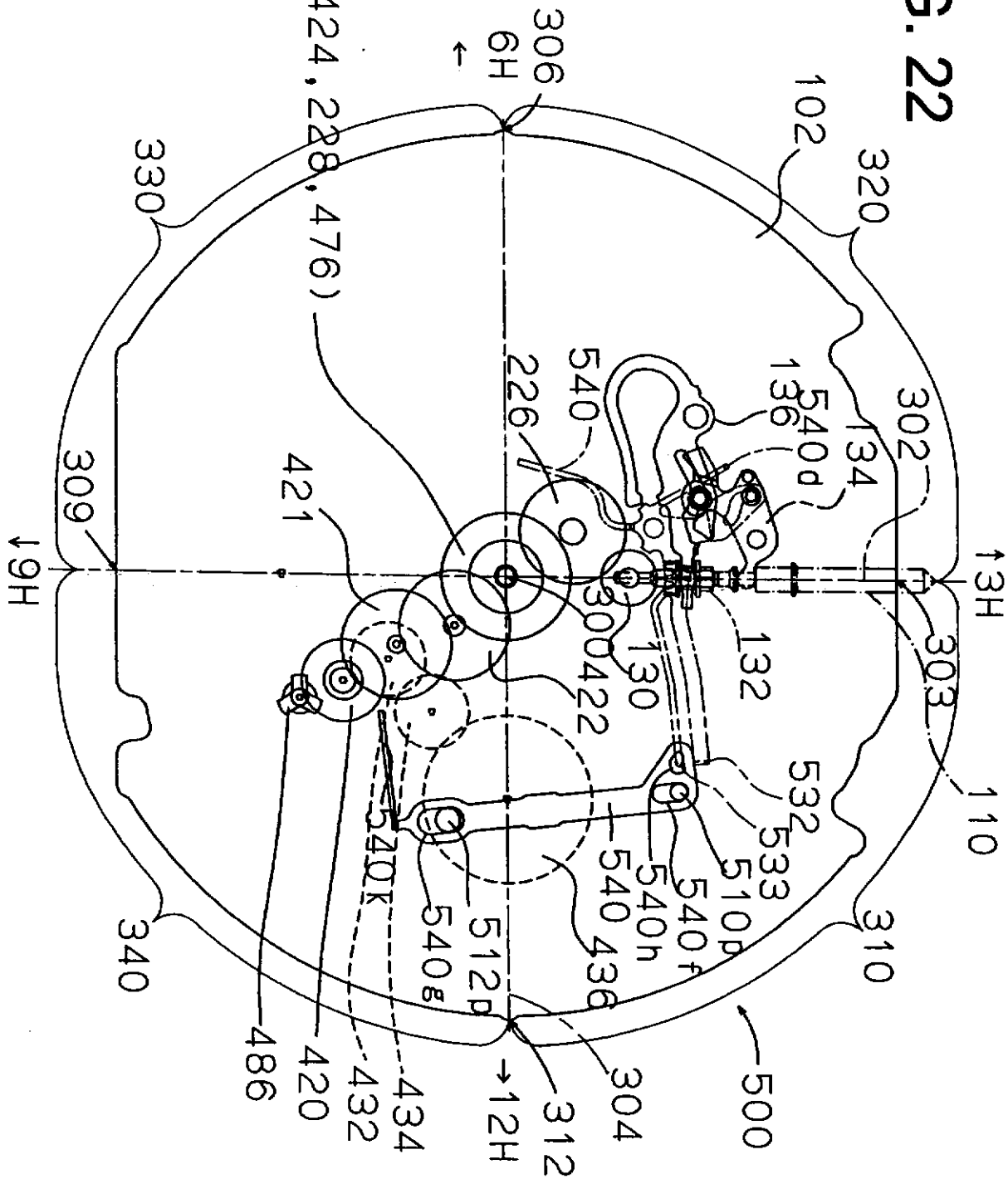

FIG. 22

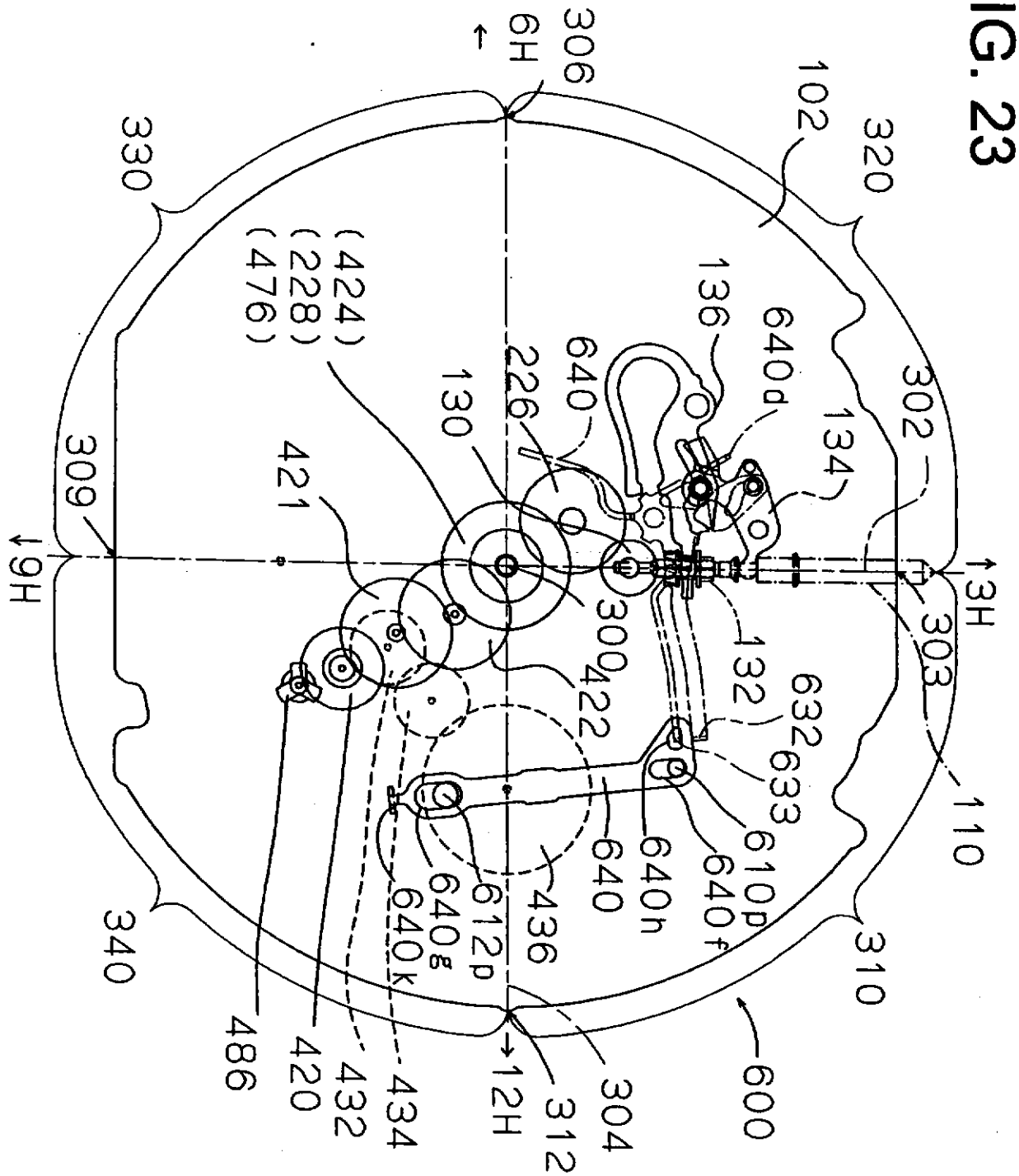
306
6H
102
320
330
(424)
(228)
(476)
136
640d
302
134
226
640
130
421
309
9H
3H
300
422
132
303
632
633
110
610p
640f
640h
640
436
612p
640g
640k
340
310
486
420
432
434
12H
312
304
600

FIG. 23

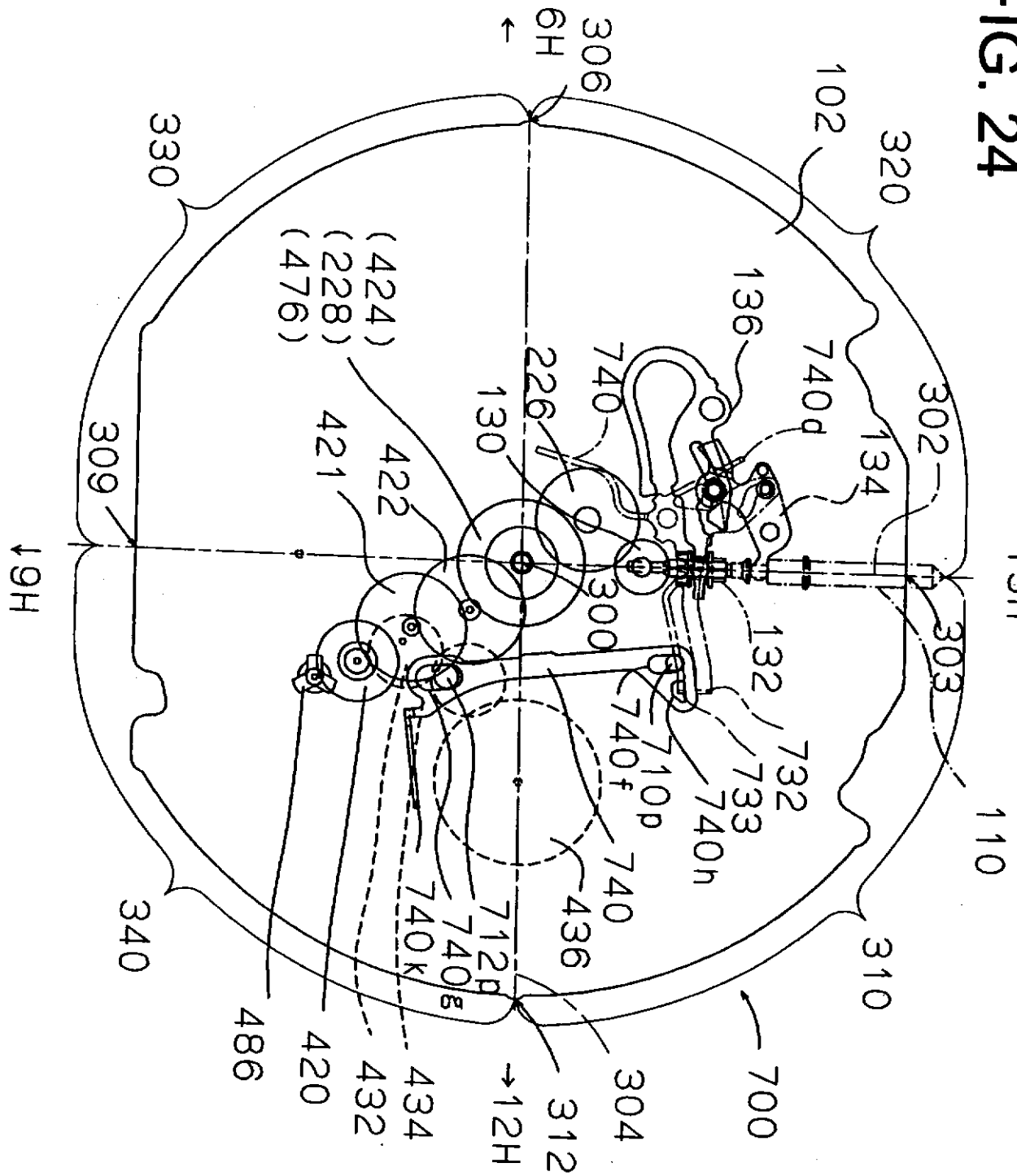
306
6H
102
320
330
(424)
(228)
(476)
136
740d
302
134
226
740
130
421
422
309
9H
3H
300
132
303
732
733
740h
710p
740f
110
740
436
712p
740g
740k
340
310
486
420
432
434
312
12H
304
700

FIG. 24