9702695-9.

IPOS's copy

PCT WORLD INTELLECTUAL PROPERTY ORGANIZATION
International Bureau

INTERNATIONAL APPLICATION PUBLISHED UNDER THE PATENT COOPERATION TREATY (PCT)

(51) International Patent Classification 6 : B08B 9/04 — A1

(11) International Publication Number: WO 96/18465

(43) International Publication Date: 20 June 1996 (20.06.96)

(21) International Application Number: PCT/AU95/00853

(22) International Filing Date: 18 December 1995 (18.12.95)

(30) Priority Data:
PN 0126 16 December 1994 (16.12.94) AU

(71) Applicant *(for all designated States except US)*: PNEUMATIC SYSTEMS INTERNATIONAL PTY. LTD. [AU/AU]; Unit 1, 21 Oxleigh Drive, Malaga, W.A. 6062 (AU).

(72) Inventor; and

(75) Inventor/Applicant *(for US only)*: CASELLA, David, Wayne [AU/AU]; Unit 1, 21 Oxleigh Drive, Malaga, W.A. 6062 (AU).

(74) Agent: COLLISON & CO.; 117 King William Street, Adelaide, S.A. 5000 (AU).

(81) Designated States: AL, AM, AT, AU, BB, BG, BR, BY, CA, CH, CN, CZ, DE, DK, EE, ES, FI, GB, GE, HU, IS, JP, KE, KG, KP, KR, KZ, LK, LR, LS, LT, LU, LV, MD, MG, MK, MN, MW, MX, NO, NZ, PL, PT, RO, RU, SD, SE, SG, SI, SK, TJ, TM, TT, UA, UG, US, UZ, VN, European patent (AT, BE, CH, DE, DK, ES, FR, GB, GR, IE, IT, LU, MC, NL, PT, SE), OAPI patent (BF, BJ, CF, CG, CI, CM, GA, GN, ML, MR, NE, SN, TD, TG), ARIPO patent (KE, LS, MW, SD, SZ, UG).

Published
With international search report.

1 applⁿ.
1 Inv.

(54) Title: INTERLOCKING MULTIPURPOSE AIRTOOL

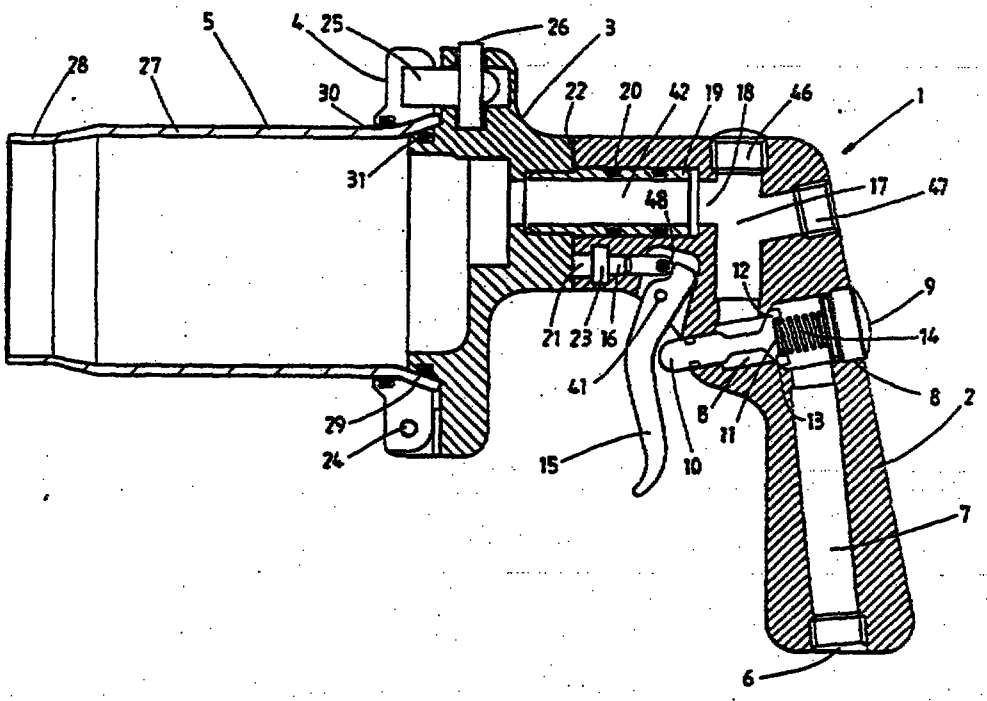

(57) Abstract

A multipurpose air tool (1) having a handle (2) to which a head (3) can be removably attached. The head (3) has attached thereto various tools such as a face plate (4) and replaceable nozzles (5). The head (3) is interlocked to the handle (2) by a spigot (19) and bayonet connection (21, 23, 34). A safety interlock (16) prevents operation of the trigger (15) and valve (12) unless the head (3) is correctly positioned on the handle (1).