FIG. 1

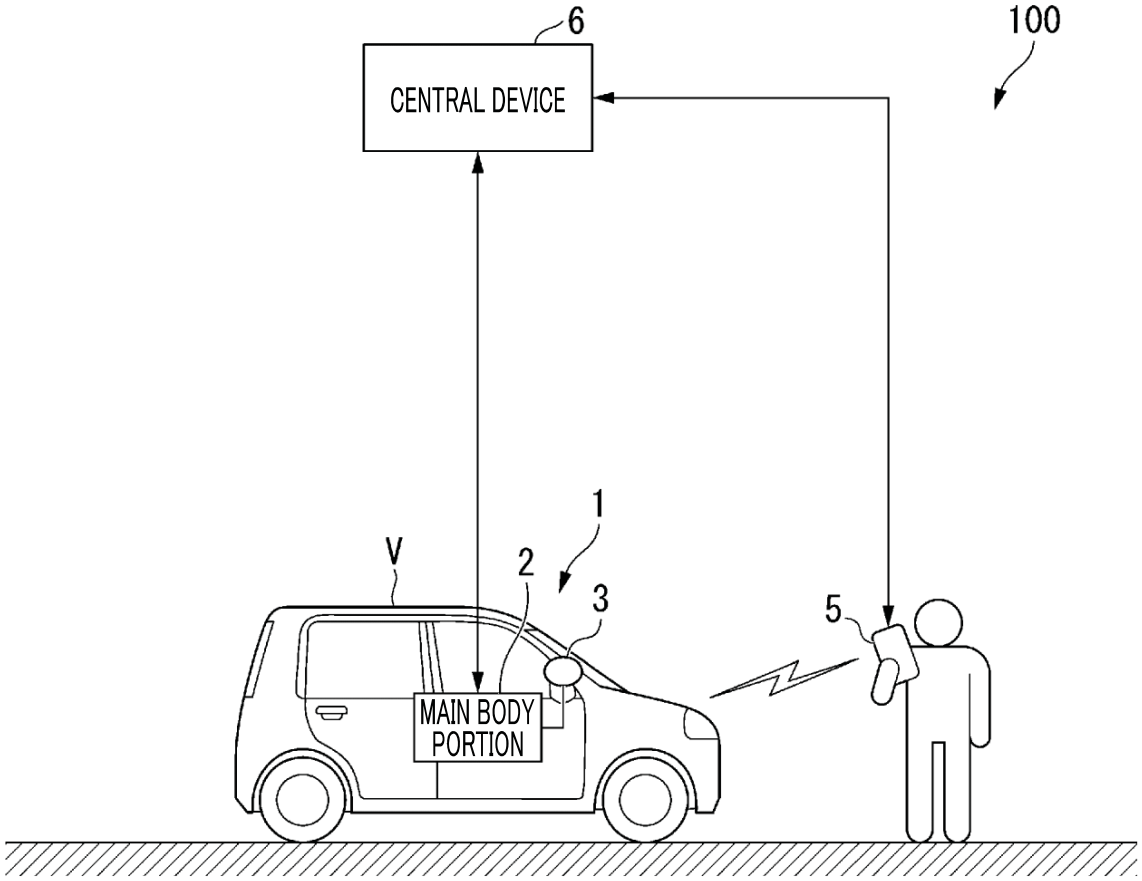

FIG. 2

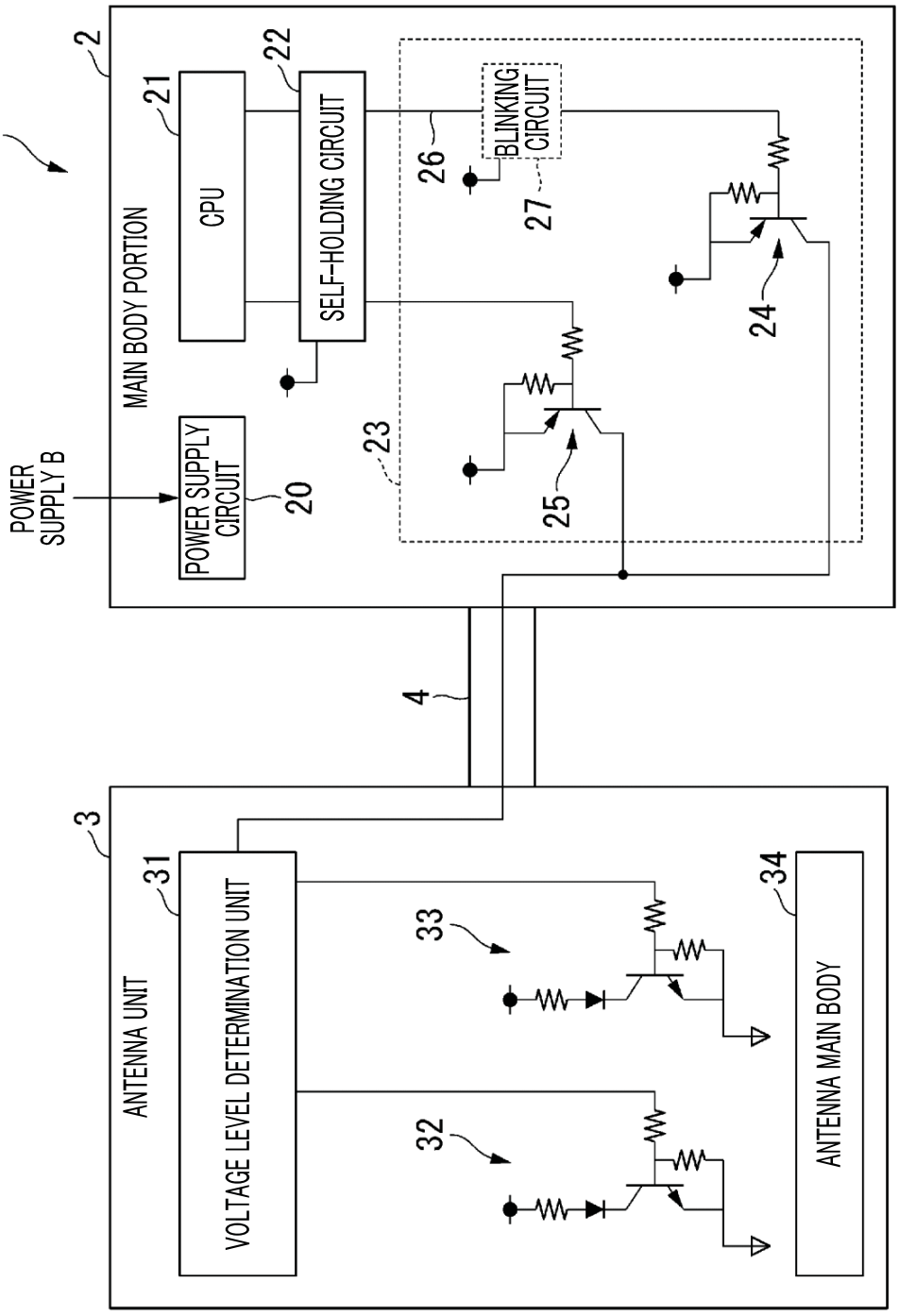
1
2
MAIN BODY PORTION
21
CPU
22
SELF-HOLDING CIRCUIT
BLINKING CIRCUIT
26
27
24
23
25
POWER SUPPLY B
POWER SUPPLY CIRCUIT
20
4
3
ANTENNA UNIT
31
VOLTAGE LEVEL DETERMINATION UNIT
33
32
34
ANTENNA MAIN BODY

FIG. 3

		PARKING STATUS	IN-VEHICLE DEVICE STATUS
ENGINE	STATE	LED1	LED2
ON	NORMAL	TURNED OFF	TURNED ON
	ABNORMAL	TURNED OFF	TURNED OFF
OFF	WITHIN LIMIT TIME	TURNED ON (BLINKED)	TURNED OFF
	OUTSIDE LIMIT TIME	TURNED OFF	TURNED OFF
IMPROPER PARKING CHECK		DESIGNATED DISPLAY PATTERN	TURNED OFF

FIG. 4

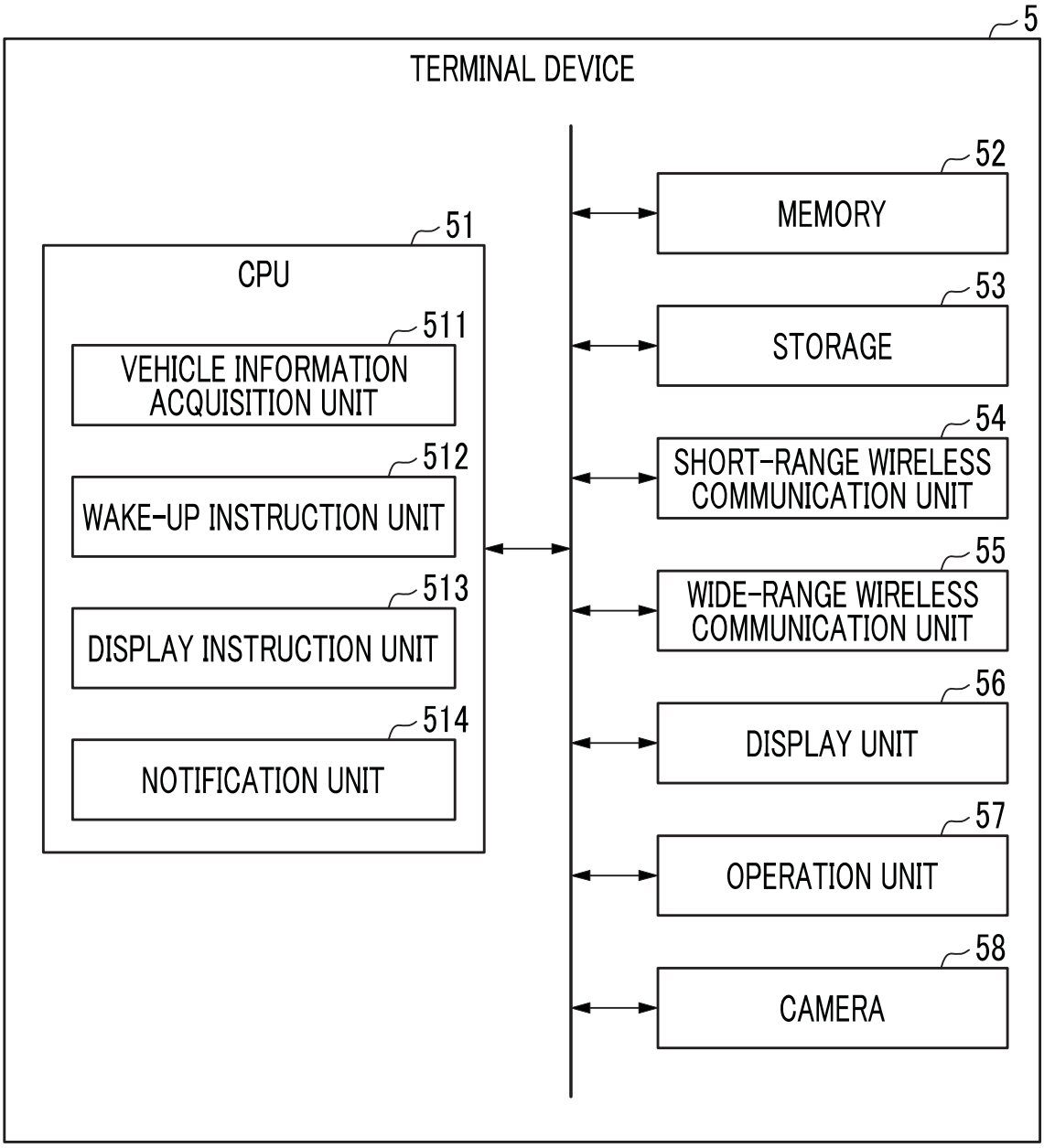
5
TERMINAL DEVICE
51
CPU
511
VEHICLE INFORMATION ACQUISITION UNIT
512
WAKE-UP INSTRUCTION UNIT
513
DISPLAY INSTRUCTION UNIT
514
NOTIFICATION UNIT
52
MEMORY
53
STORAGE
54
SHORT-RANGE WIRELESS COMMUNICATION UNIT
55
WIDE-RANGE WIRELESS COMMUNICATION UNIT
56
DISPLAY UNIT
57
OPERATION UNIT
58
CAMERA

FIG. 5

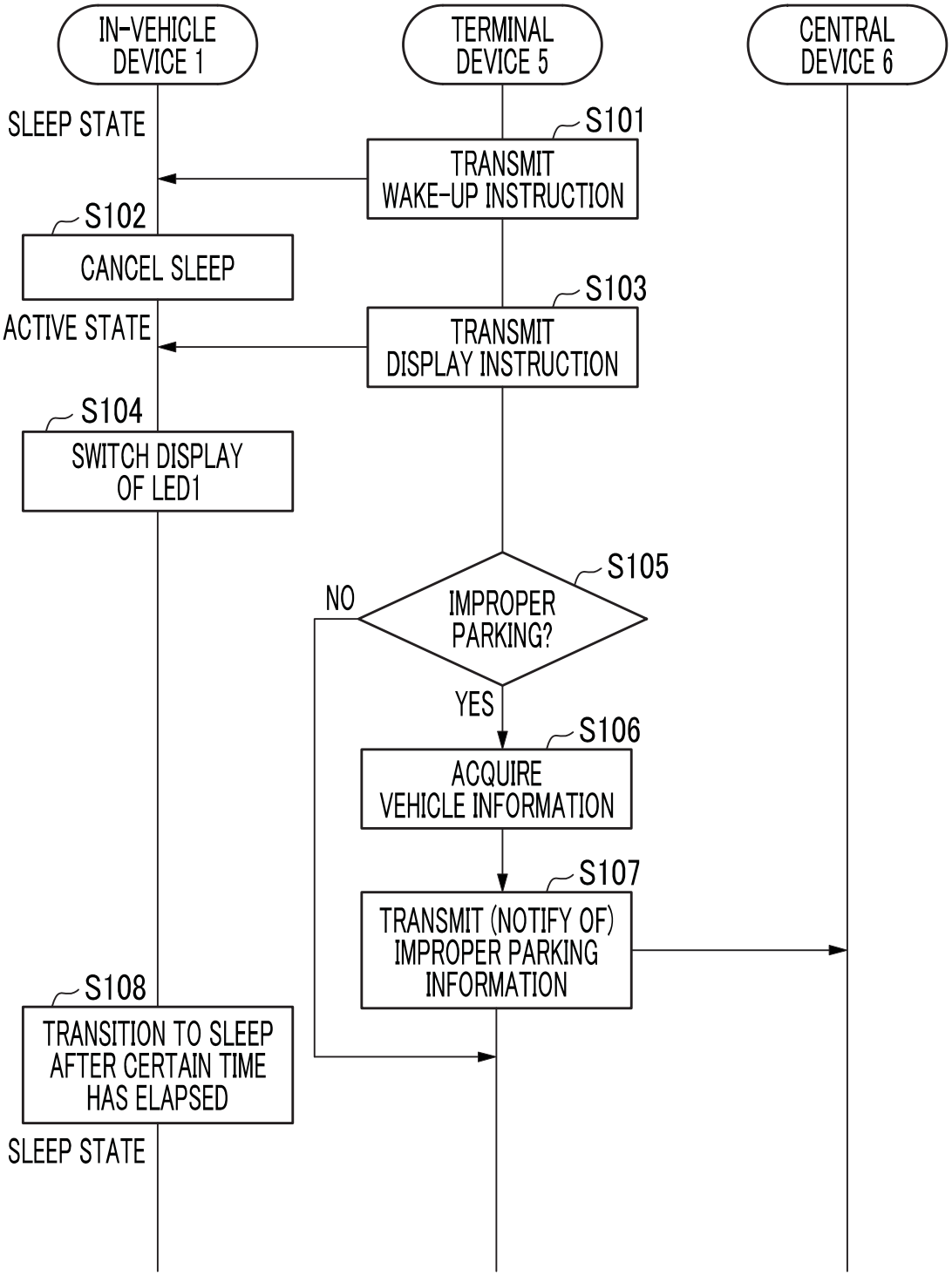
IN-VEHICLE DEVICE 1
TERMINAL DEVICE 5
CENTRAL DEVICE 6
SLEEP STATE
S101
TRANSMIT WAKE-UP INSTRUCTION
S102
CANCEL SLEEP
S103
ACTIVE STATE
TRANSMIT DISPLAY INSTRUCTION
S104
SWITCH DISPLAY OF LED1
S105
NO
IMPROPER PARKING?
YES
S106
ACQUIRE VEHICLE INFORMATION
S107
TRANSMIT (NOTIFY OF) IMPROPER PARKING INFORMATION
S108
TRANSITION TO SLEEP AFTER CERTAIN TIME HAS ELAPSED
SLEEP STATE

FIG. 6

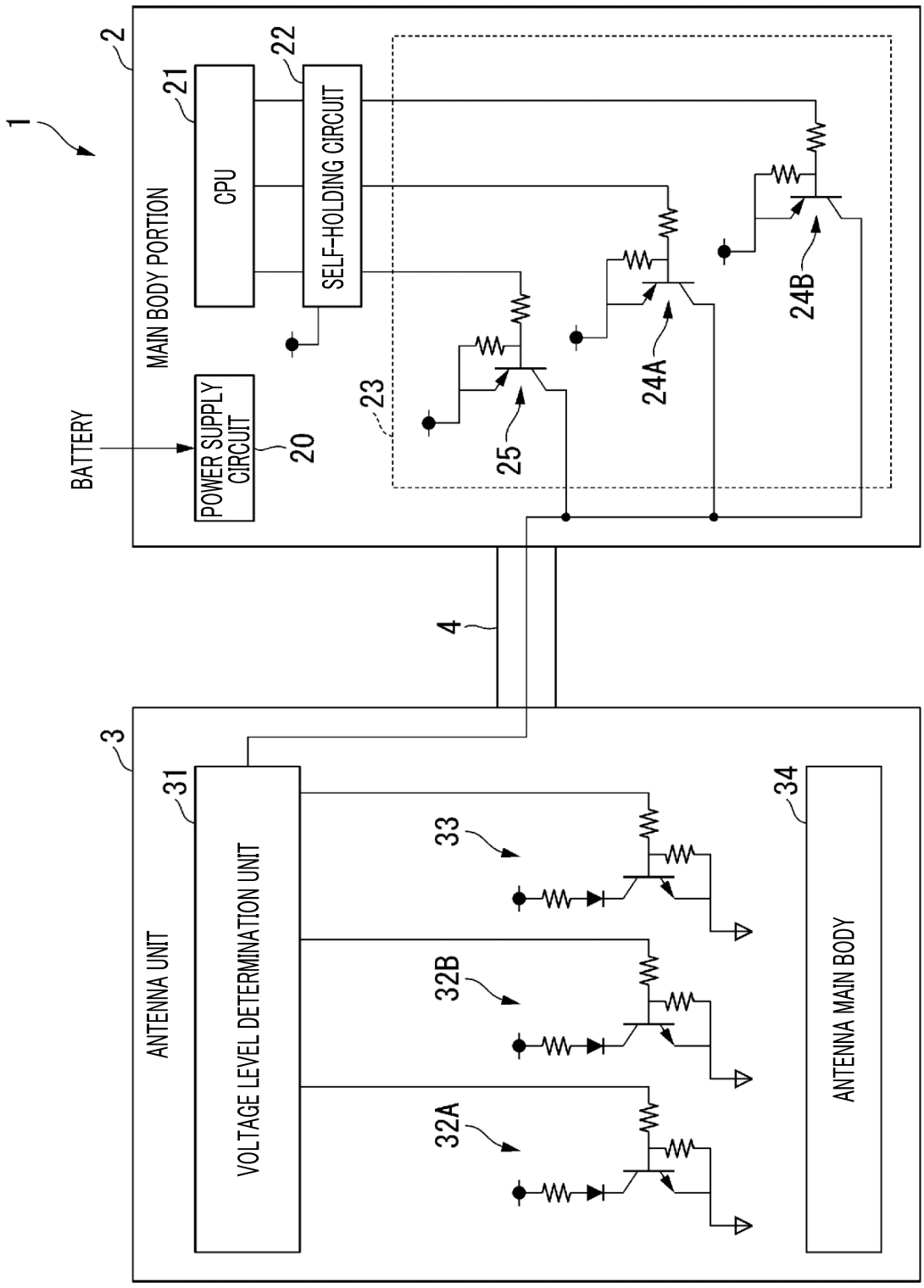
1
2
MAIN BODY PORTION
21
CPU
22
SELF-HOLDING CIRCUIT
23
24A
24B
25
BATTERY
POWER SUPPLY CIRCUIT
20
4
3
ANTENNA UNIT
31
VOLTAGE LEVEL DETERMINATION UNIT
33
32B
32A
34
ANTENNA MAIN BODY

FIG. 7

		PARKING STATUS		IN-VEHICLE DEVICE STATUS
ENGINE	STATE	LED1A	LED1B	LED2
ON	NORMAL	TURNED OFF	TURNED OFF	TURNED ON
	ABNORMAL	TURNED OFF	TURNED OFF	TURNED OFF
OFF	WITHIN LIMIT TIME	TURNED ON (BLINKED)	TURNED OFF	TURNED OFF
	WITHIN LIMIT TIME (REMAINING TIME IS EQUAL TO OR SHORTER THAN n MINUTES)	TURNED OFF	TURNED ON (BLINKED)	TURNED OFF
	OUTSIDE LIMIT TIME	TURNED OFF	TURNED OFF	TURNED OFF
IMPROPER PARKING CHECK		DESIGNATED DISPLAY PATTERN (*)		TURNED OFF

(*) DESIGNATED DISPLAY PATTERN:
(1) LED1A/LED1B: TURNED ON/TURNED OFF
(2) LED1A/LED1B: TURNED OFF/TURNED ON
(3) LED1A/LED1B: TURNED ON/TURNED ON

FIG. 8

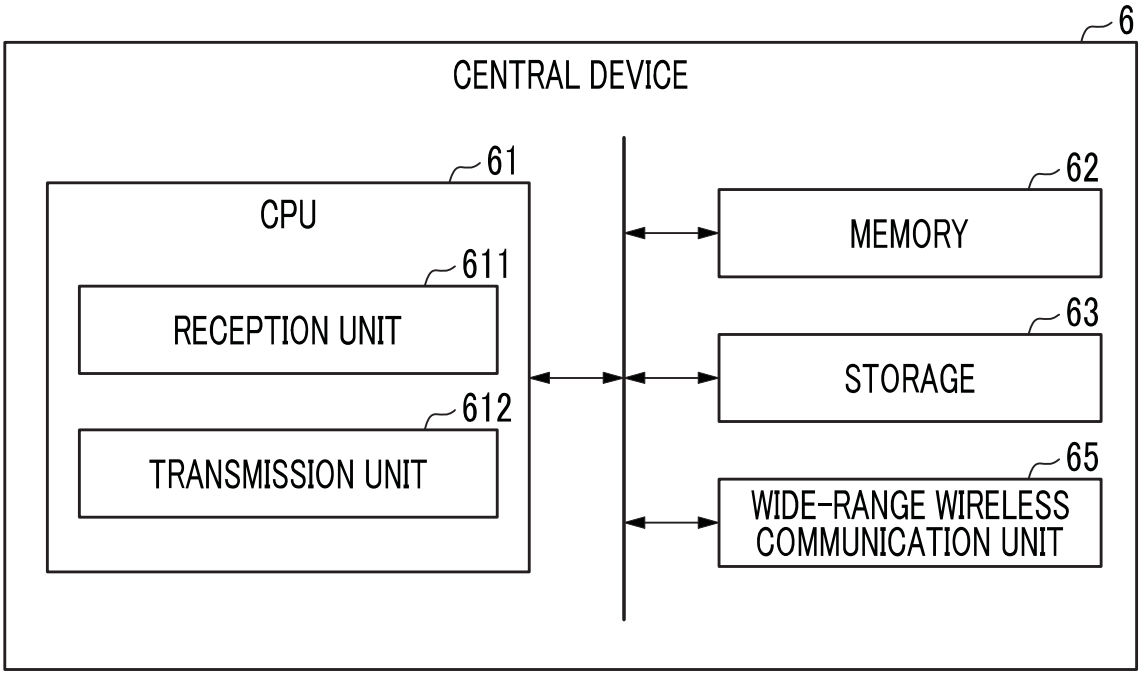
6
CENTRAL DEVICE
61
CPU
611
RECEPTION UNIT
612
TRANSMISSION UNIT
62
MEMORY
63
STORAGE
65
WIDE-RANGE WIRELESS COMMUNICATION UNIT

FIG. 9

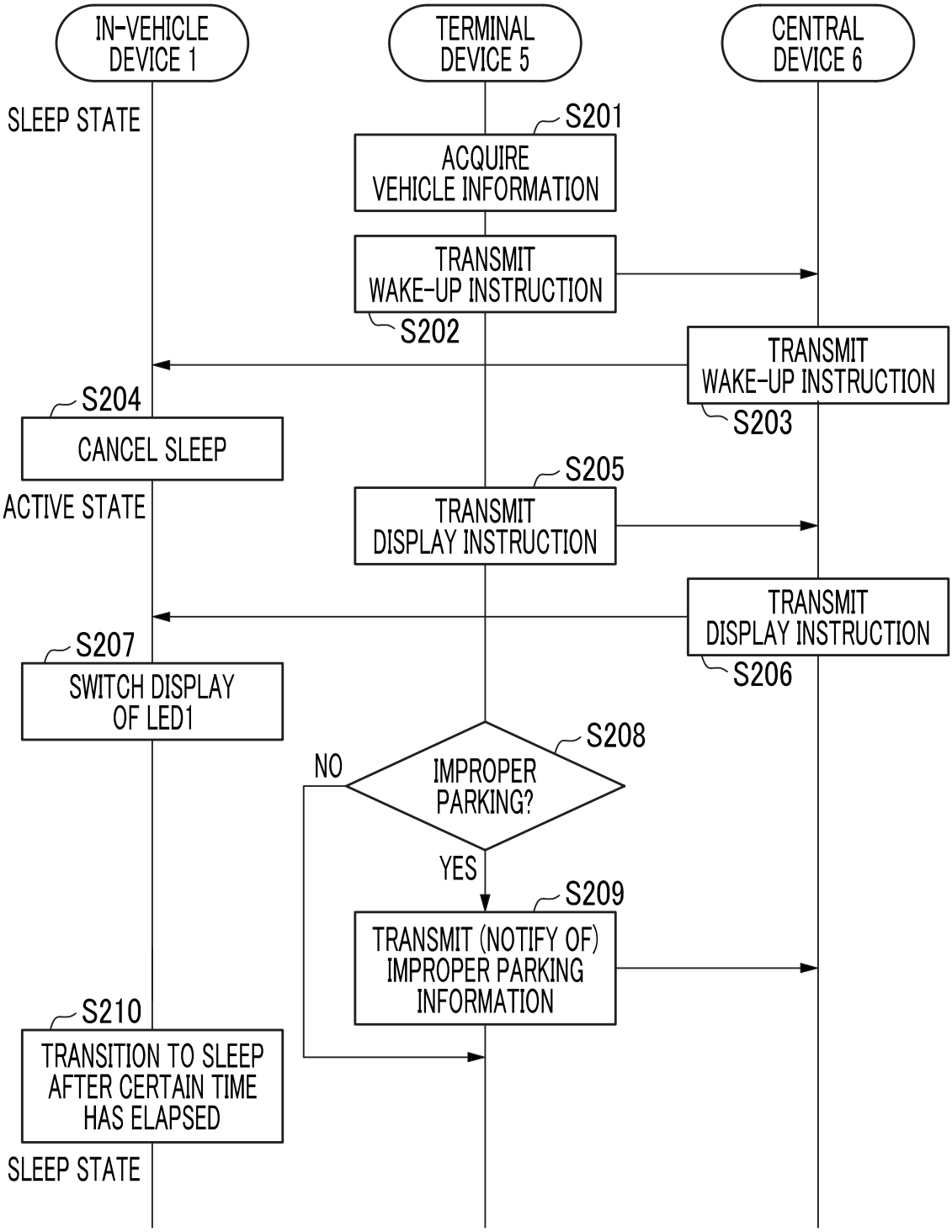
IN-VEHICLE DEVICE 1
TERMINAL DEVICE 5
CENTRAL DEVICE 6
SLEEP STATE
S201
ACQUIRE VEHICLE INFORMATION
TRANSMIT WAKE-UP INSTRUCTION
S202
TRANSMIT WAKE-UP INSTRUCTION
S203
S204
CANCEL SLEEP
ACTIVE STATE
S205
TRANSMIT DISPLAY INSTRUCTION
TRANSMIT DISPLAY INSTRUCTION
S206
S207
SWITCH DISPLAY OF LED1
S208
NO
IMPROPER PARKING?
YES
S209
TRANSMIT (NOTIFY OF) IMPROPER PARKING INFORMATION
S210
TRANSITION TO SLEEP AFTER CERTAIN TIME HAS ELAPSED
SLEEP STATE

FIG. 10

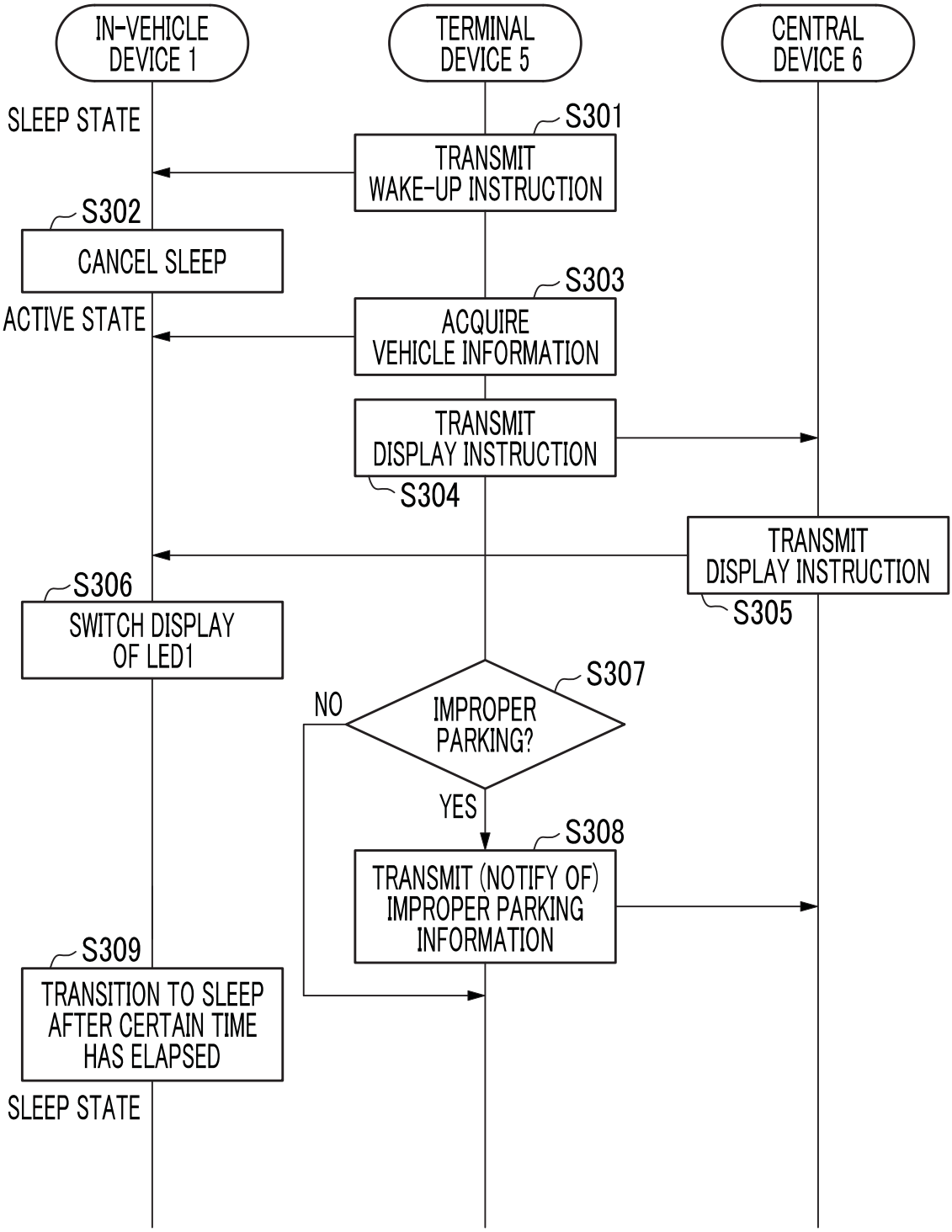
IN-VEHICLE DEVICE 1
TERMINAL DEVICE 5
CENTRAL DEVICE 6
SLEEP STATE
S301
TRANSMIT WAKE-UP INSTRUCTION
S302
CANCEL SLEEP
S303
ACTIVE STATE
ACQUIRE VEHICLE INFORMATION
TRANSMIT DISPLAY INSTRUCTION
S304
TRANSMIT DISPLAY INSTRUCTION
S305
S306
SWITCH DISPLAY OF LED1
S307
NO
IMPROPER PARKING?
YES
S308
TRANSMIT (NOTIFY OF) IMPROPER PARKING INFORMATION
S309
TRANSITION TO SLEEP AFTER CERTAIN TIME HAS ELAPSED
SLEEP STATE

FIG. 11

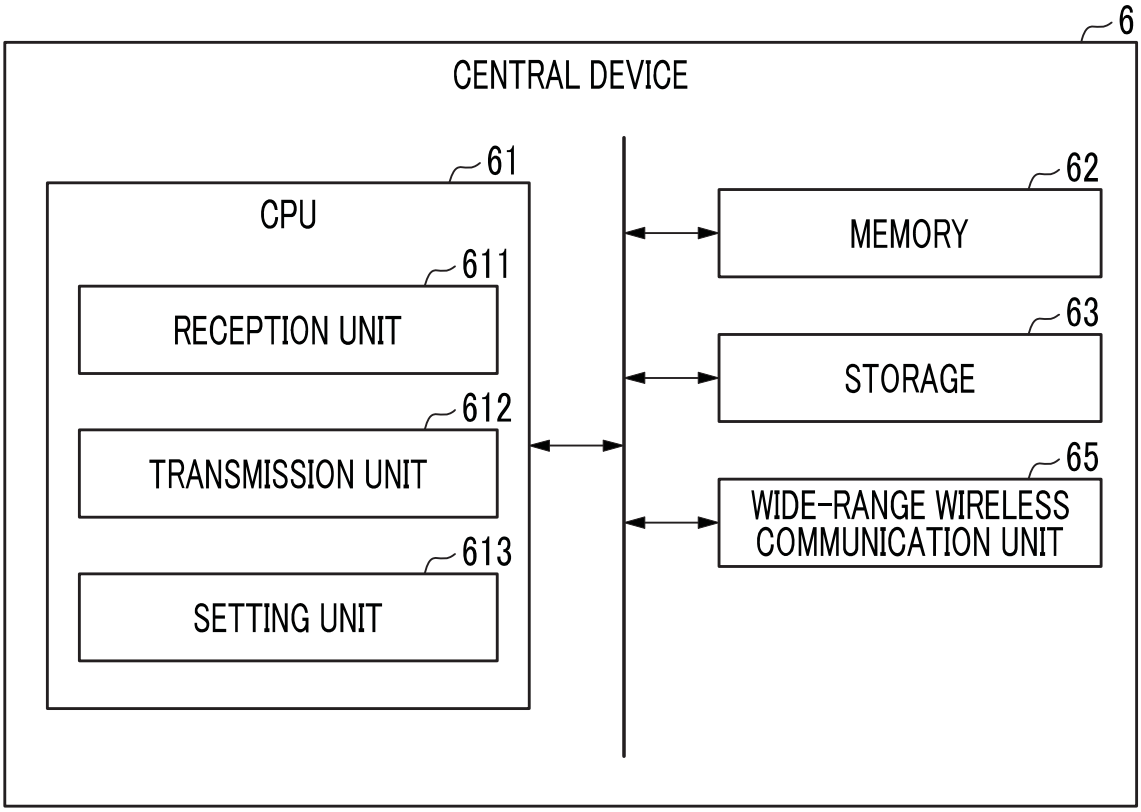
6
CENTRAL DEVICE
61
CPU
611
RECEPTION UNIT
612
TRANSMISSION UNIT
613
SETTING UNIT
62
MEMORY
63
STORAGE
65
WIDE-RANGE WIRELESS COMMUNICATION UNIT

FIG. 12

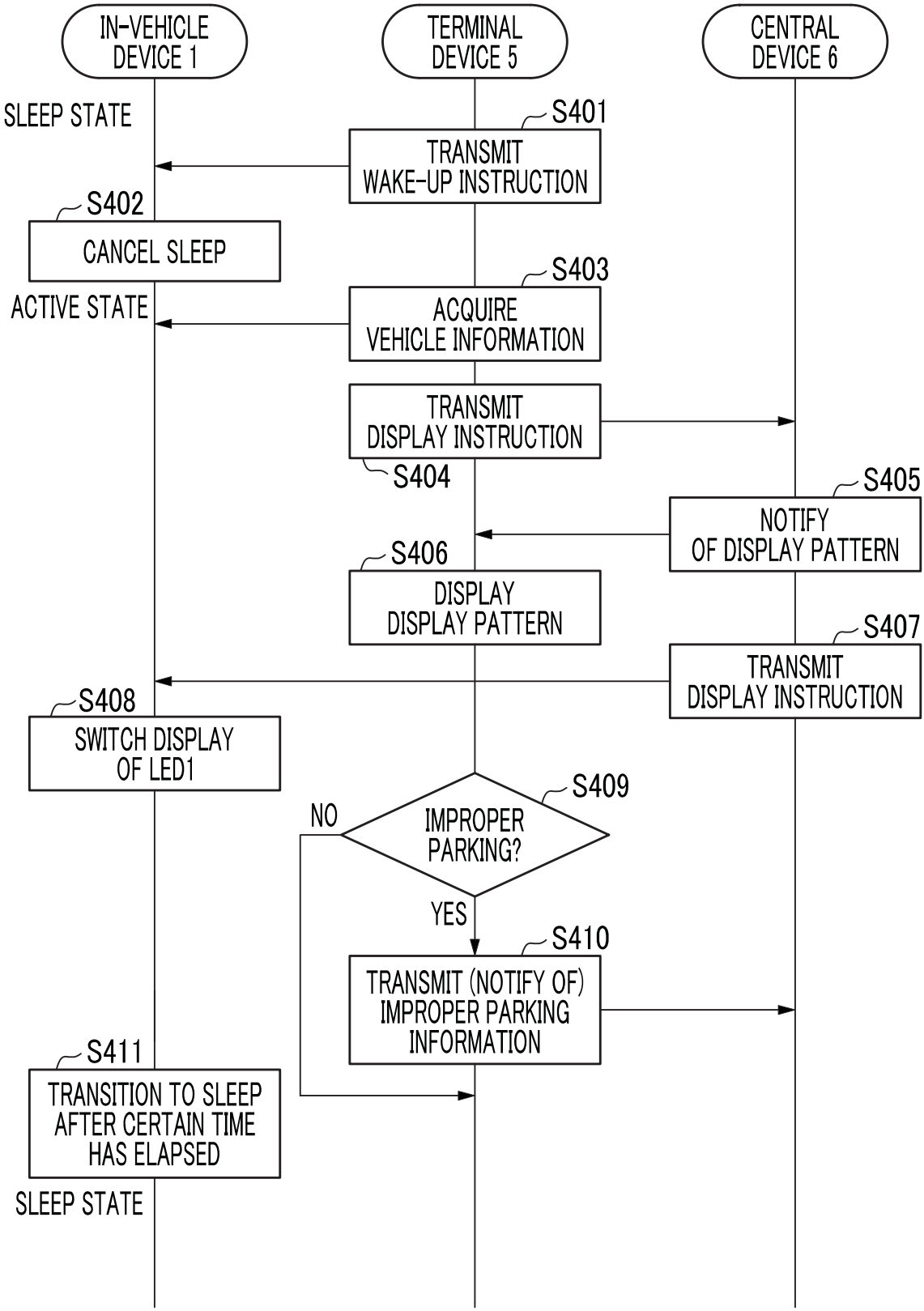
IN-VEHICLE DEVICE 1
TERMINAL DEVICE 5
CENTRAL DEVICE 6
SLEEP STATE
S401
TRANSMIT WAKE-UP INSTRUCTION
S402
CANCEL SLEEP
S403
ACTIVE STATE
ACQUIRE VEHICLE INFORMATION
TRANSMIT DISPLAY INSTRUCTION
S404
S405
NOTIFY OF DISPLAY PATTERN
S406
DISPLAY DISPLAY PATTERN
S407
TRANSMIT DISPLAY INSTRUCTION
S408
SWITCH DISPLAY OF LED1
S409
NO
IMPROPER PARKING?
YES
S410
TRANSMIT (NOTIFY OF) IMPROPER PARKING INFORMATION
S411
TRANSITION TO SLEEP AFTER CERTAIN TIME HAS ELAPSED
SLEEP STATE