2 6 DEC 2003

FIG.I

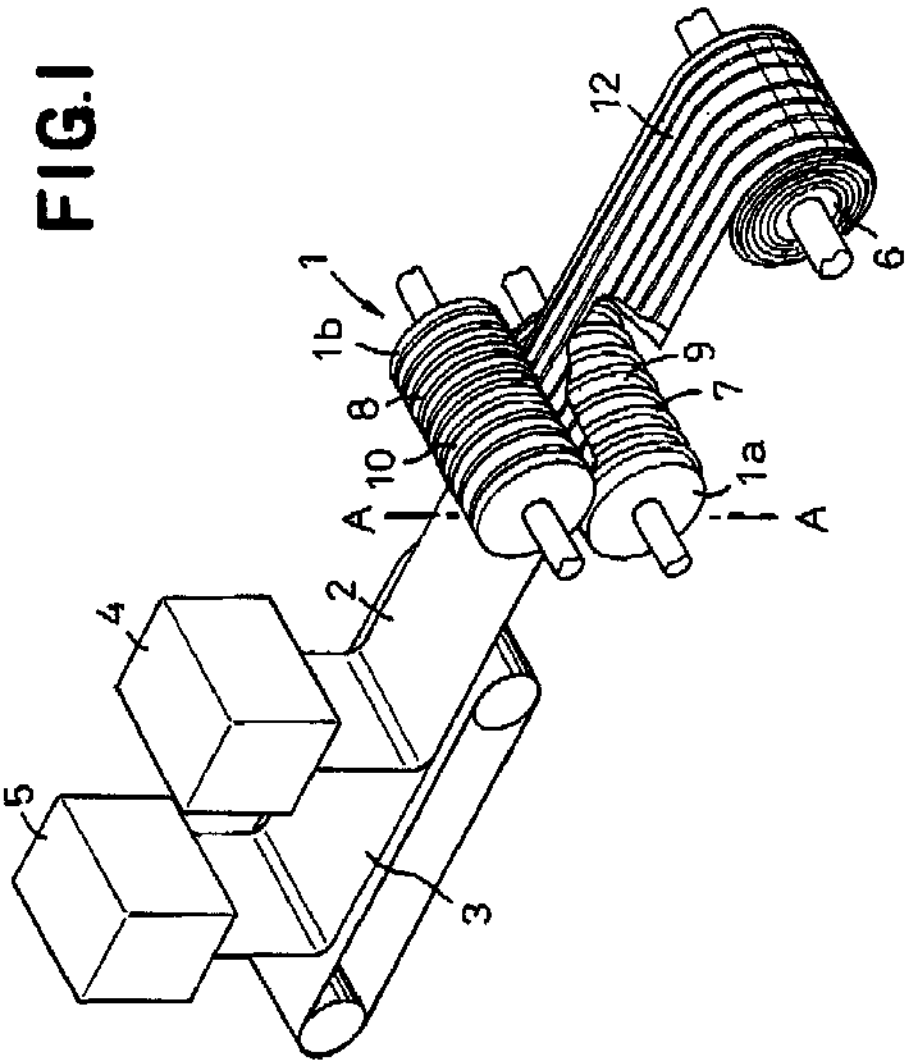

26 DEC 2003

FIG.2

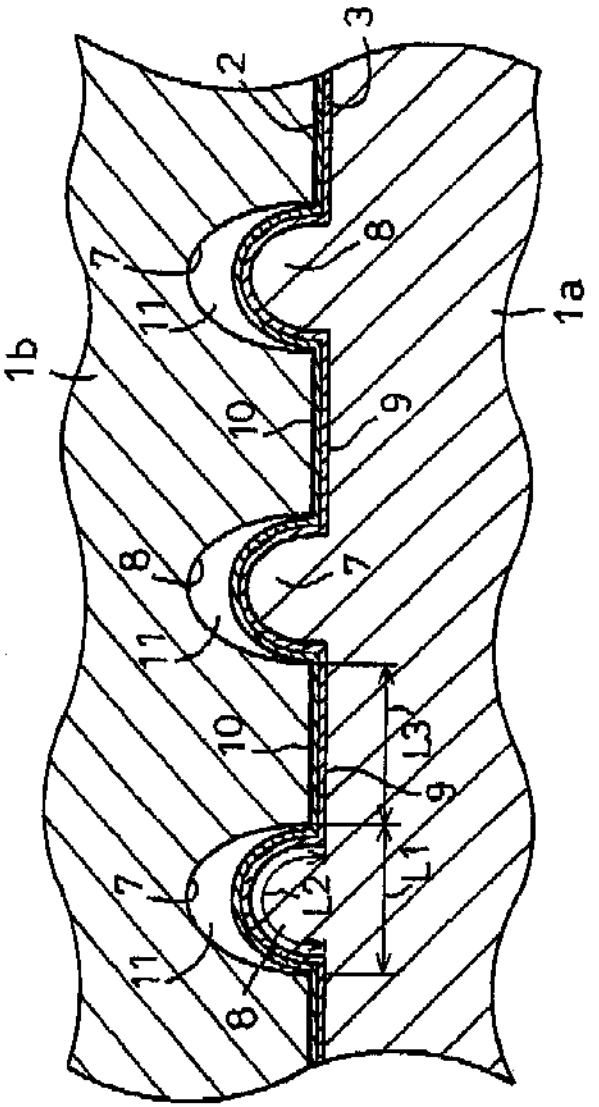

20 DEC 2003
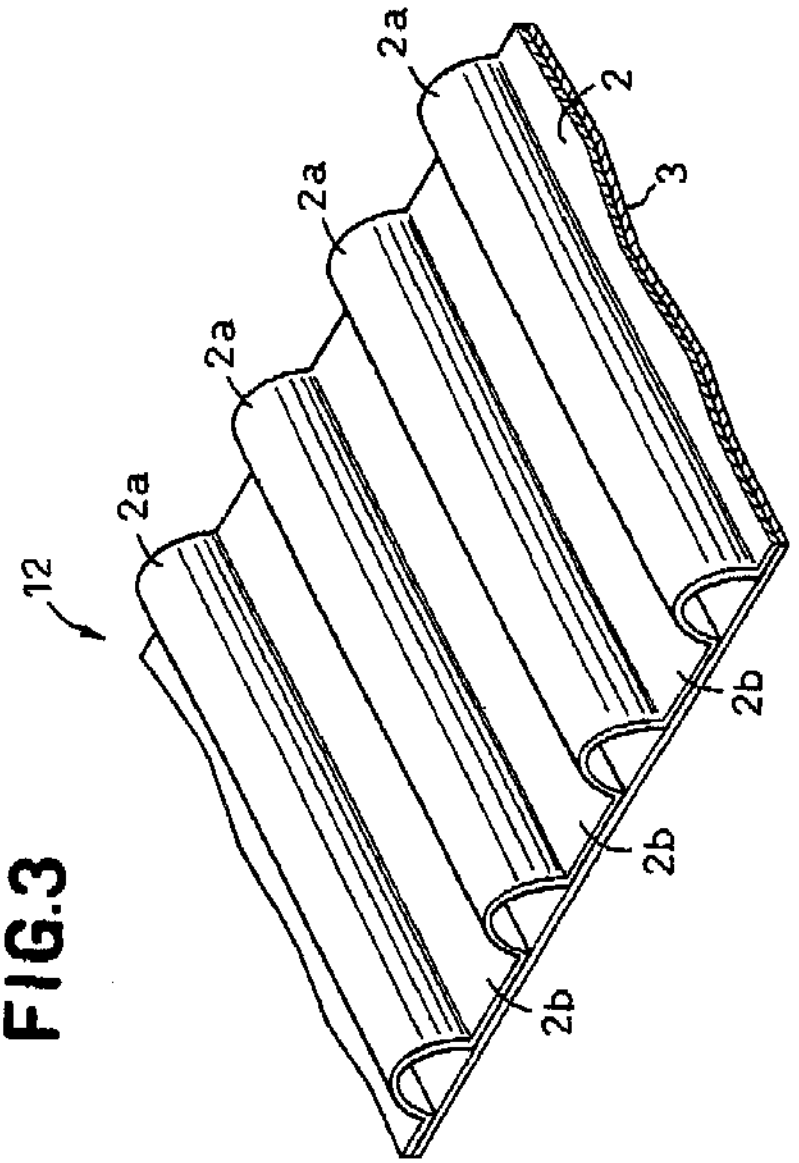
FIG.3