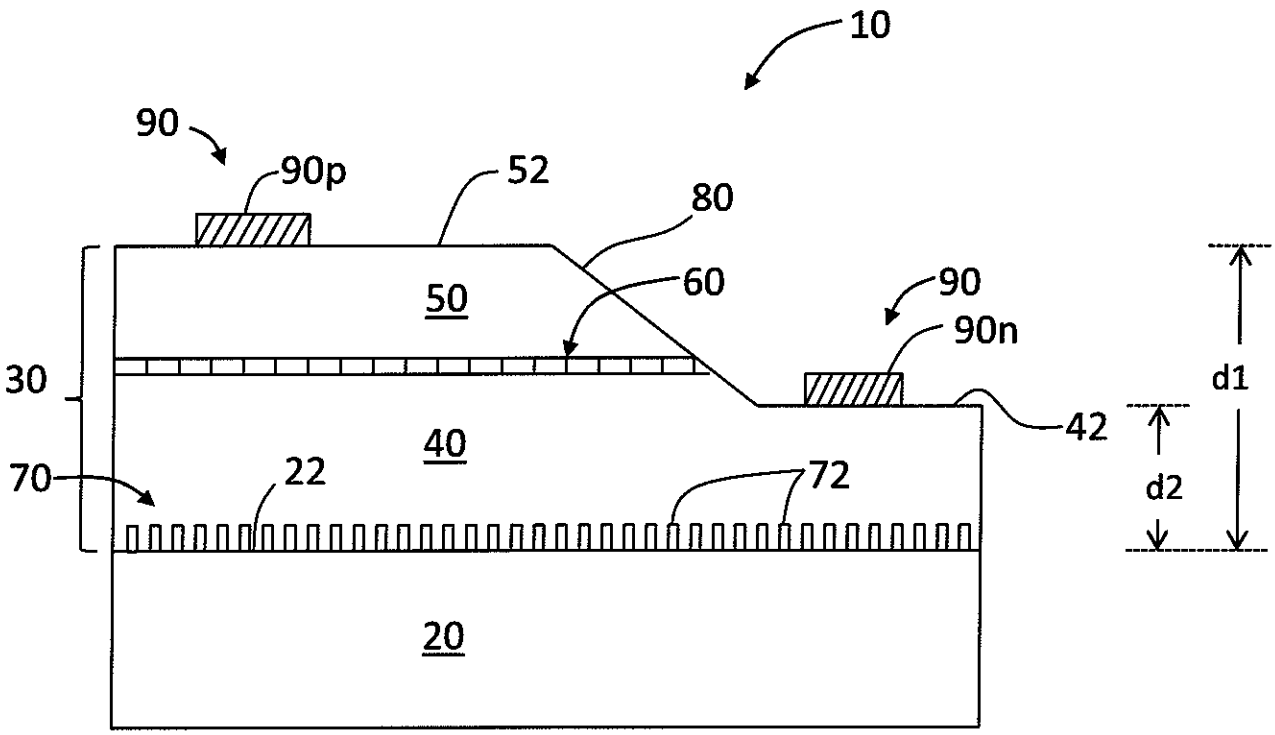

FIG. 1

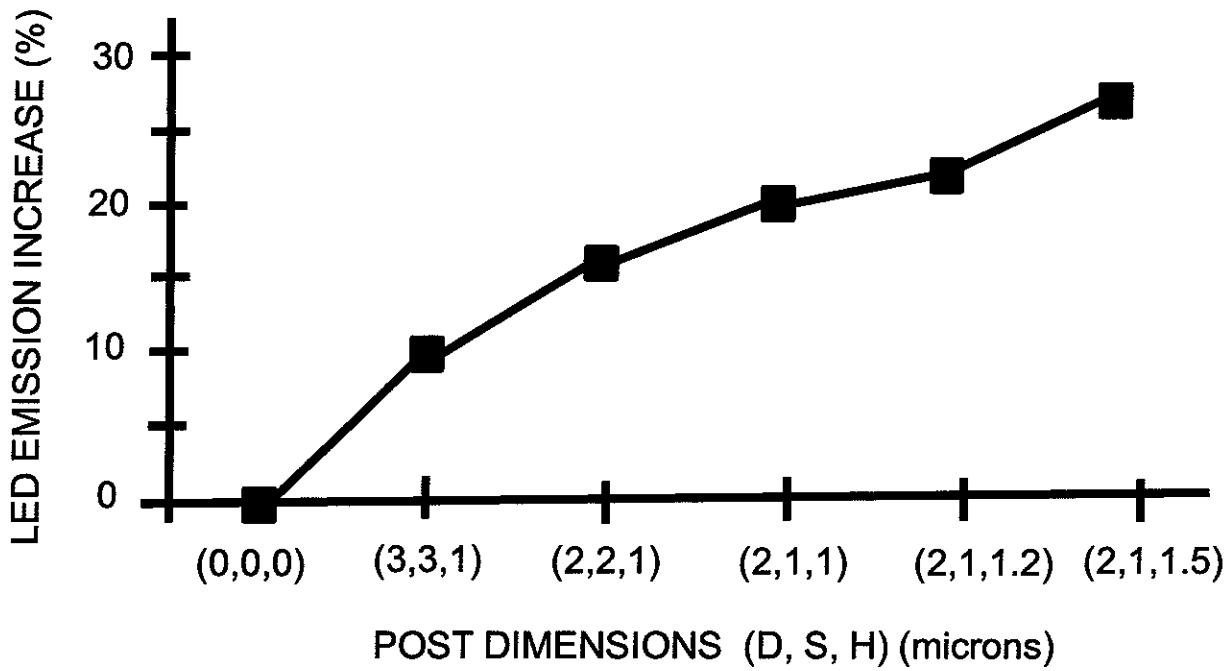

FIG. 2

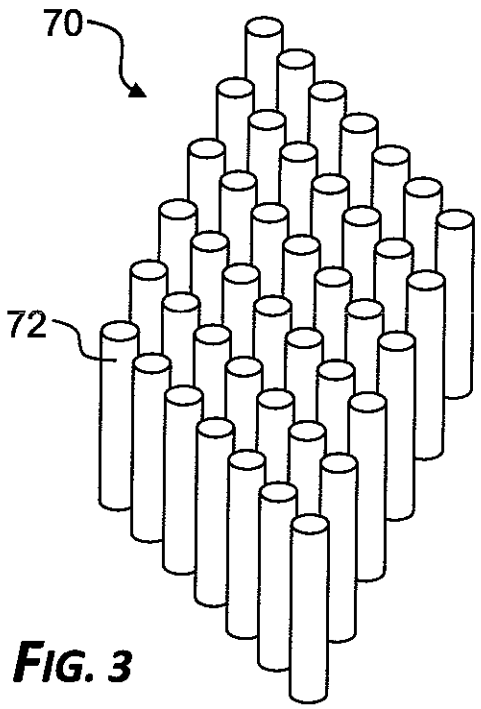

FIG. 3

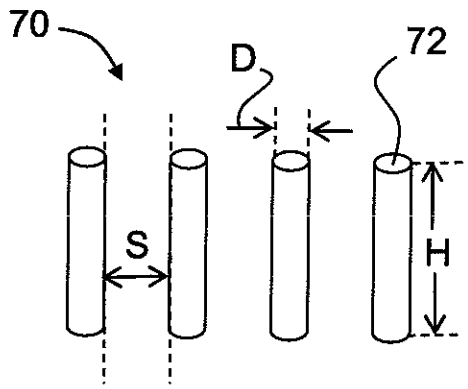

FIG. 4

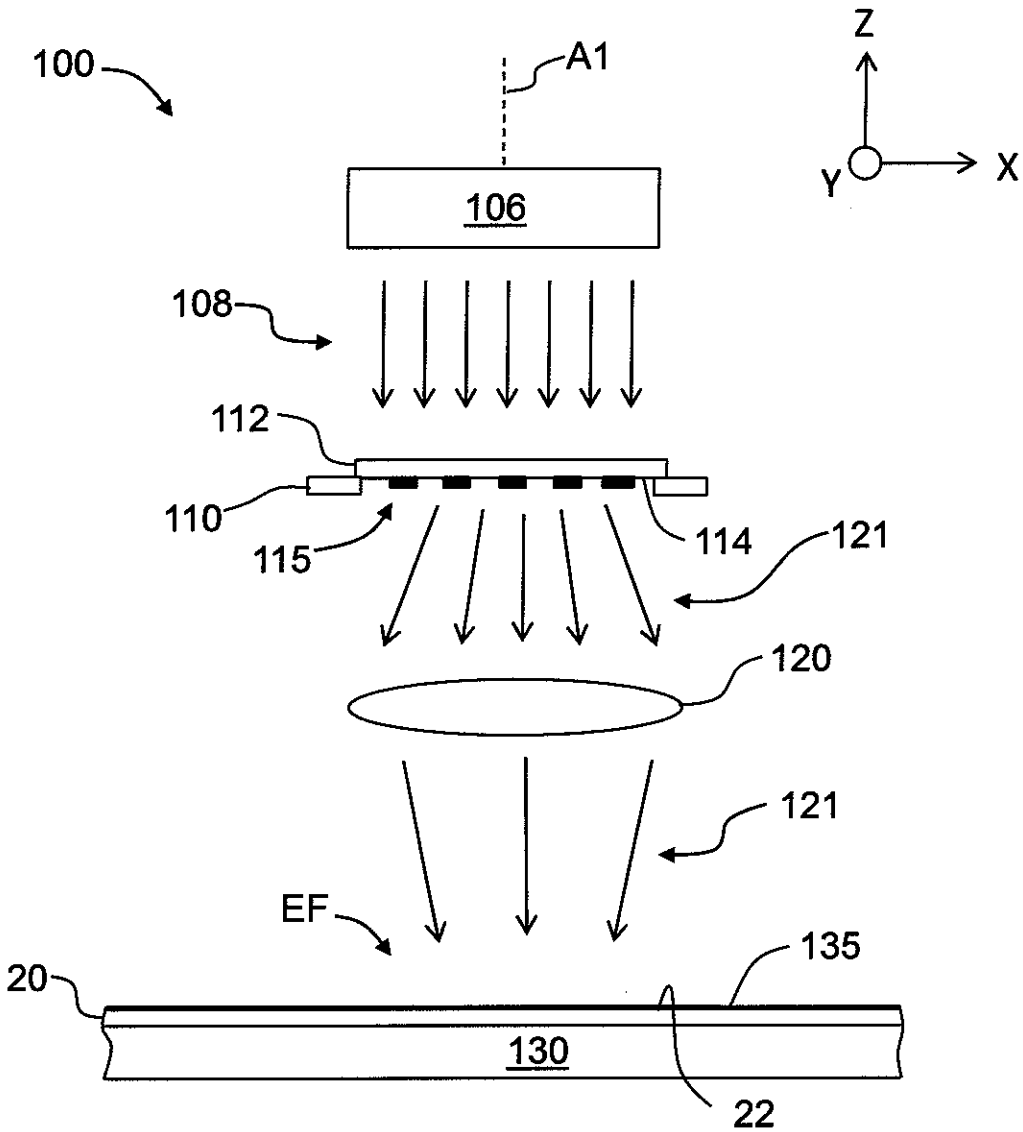

FIG. 5

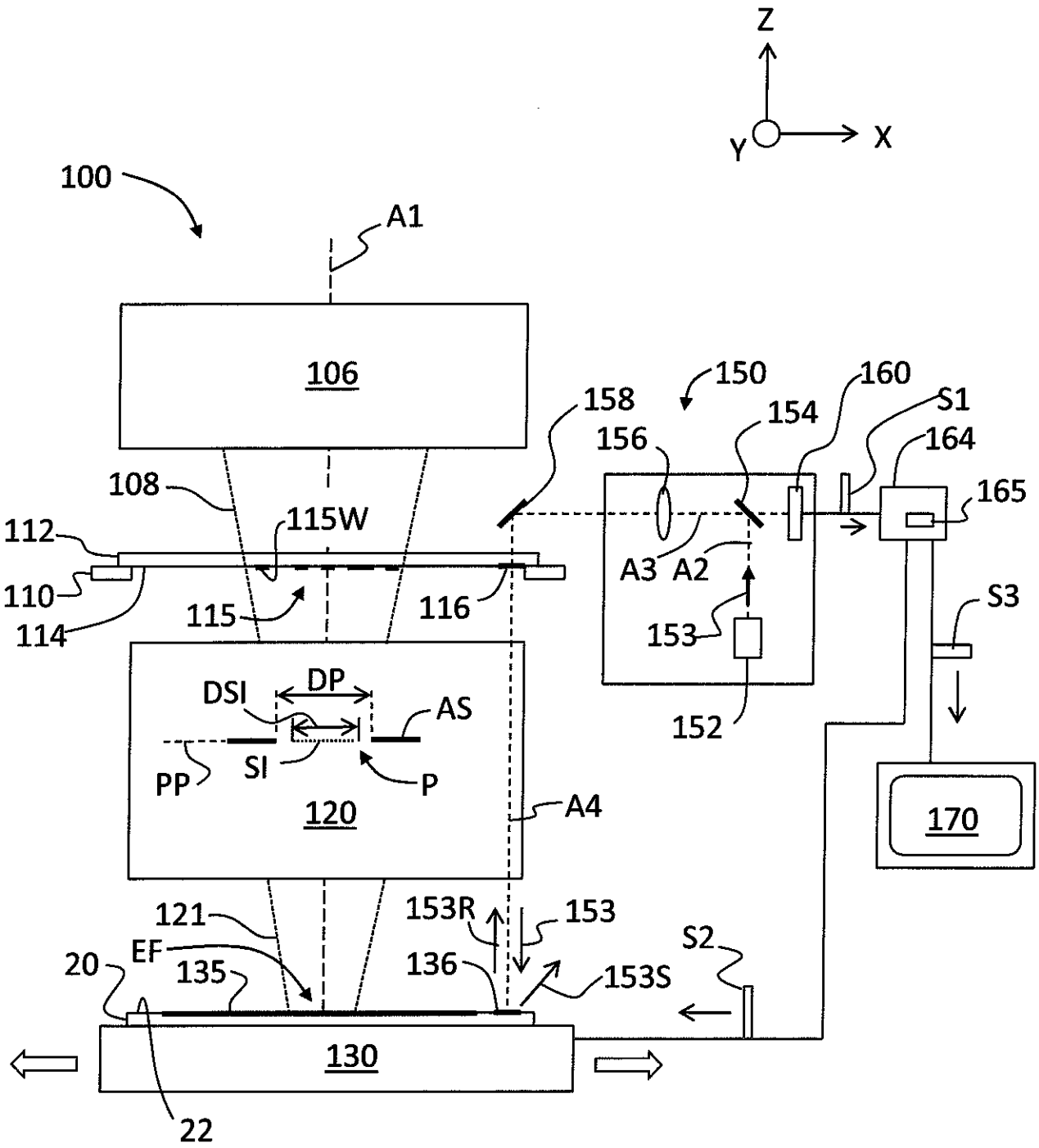
Z
Y
X
100
A1
106
108
112
110
114
115W
115
116
158
150
156
154
160
S1
164
165
A3
A2
153
152
S3
170
DSI
DP
AS
PP
SI
P
120
A4
121
EF
20
135
153R
153
136
153S
S2
130
22

FIG. 6

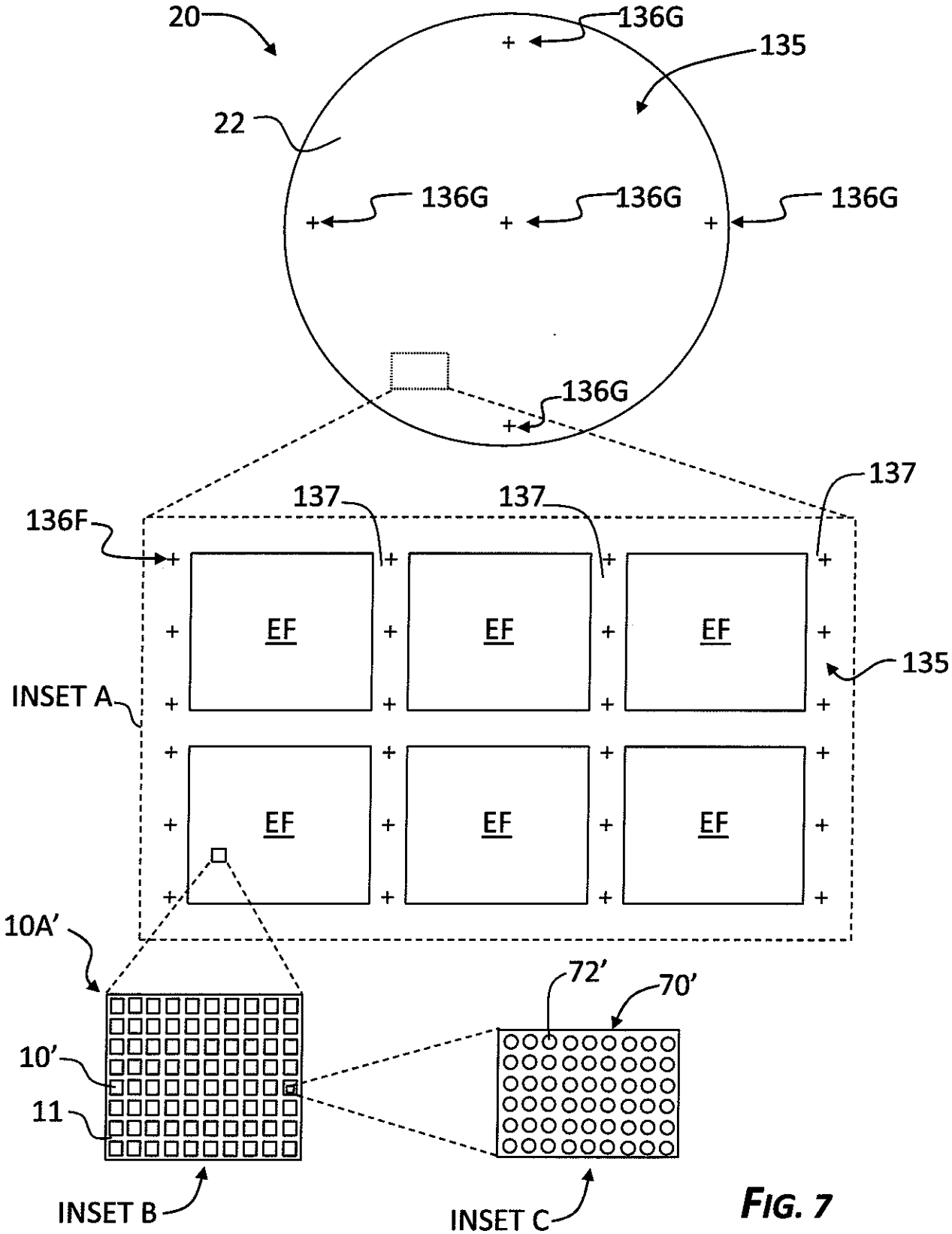
20
136G
135
22
136G
136G
136G
136G
137
137
137
136F
EF
EF
EF
EF
EF
EF
135
INSET A
10A'
72'
70'
10'
11
INSET B
INSET C

FIG. 7

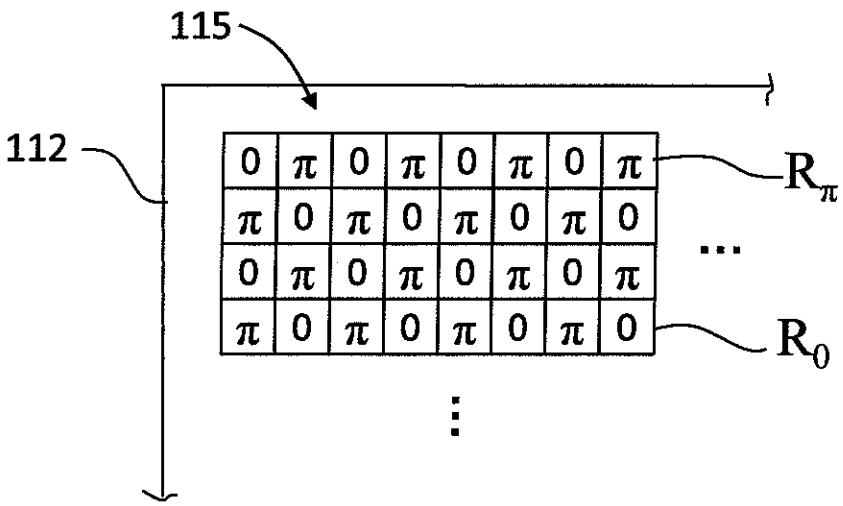
115
112
0 π 0 π 0 π 0 π
π 0 π 0 π 0 π 0
0 π 0 π 0 π 0 π
π 0 π 0 π 0 π 0
R_π
...
R_0
⋮

FIG. 8A

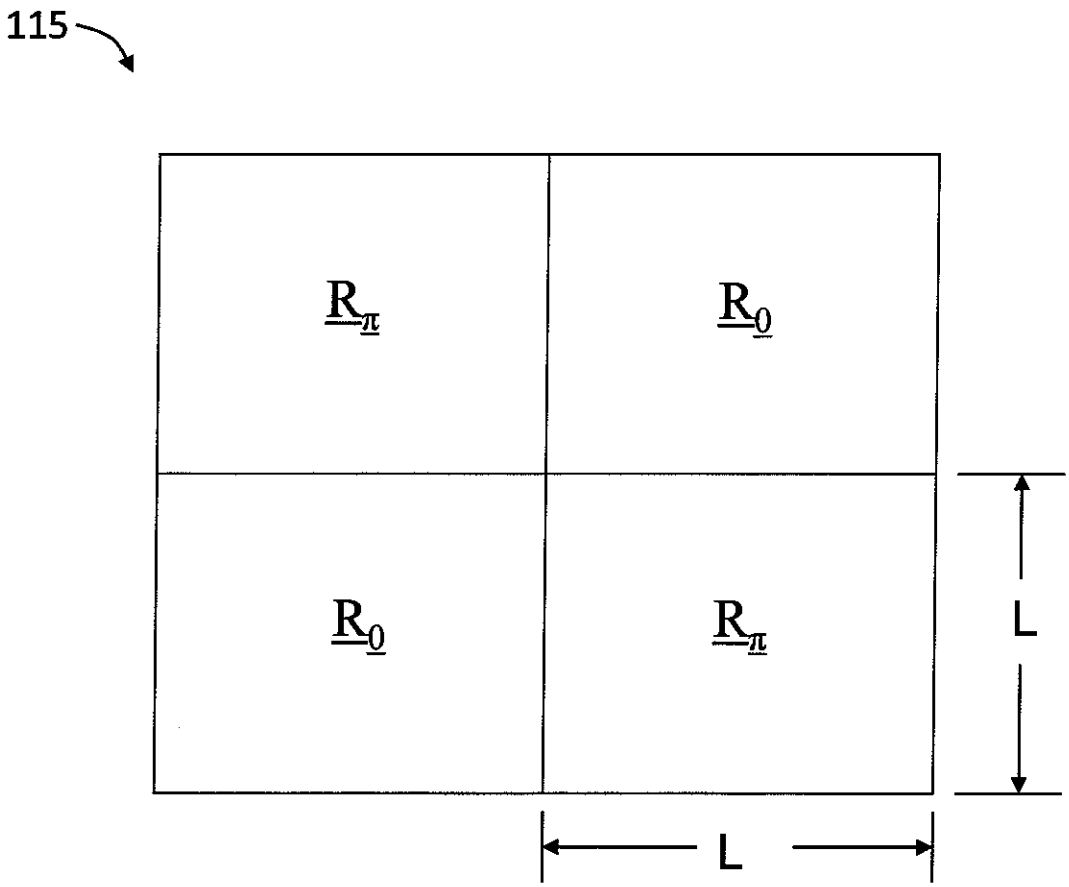
115
R_π
R_0
R_0
R_π
L
L

FIG. 8B

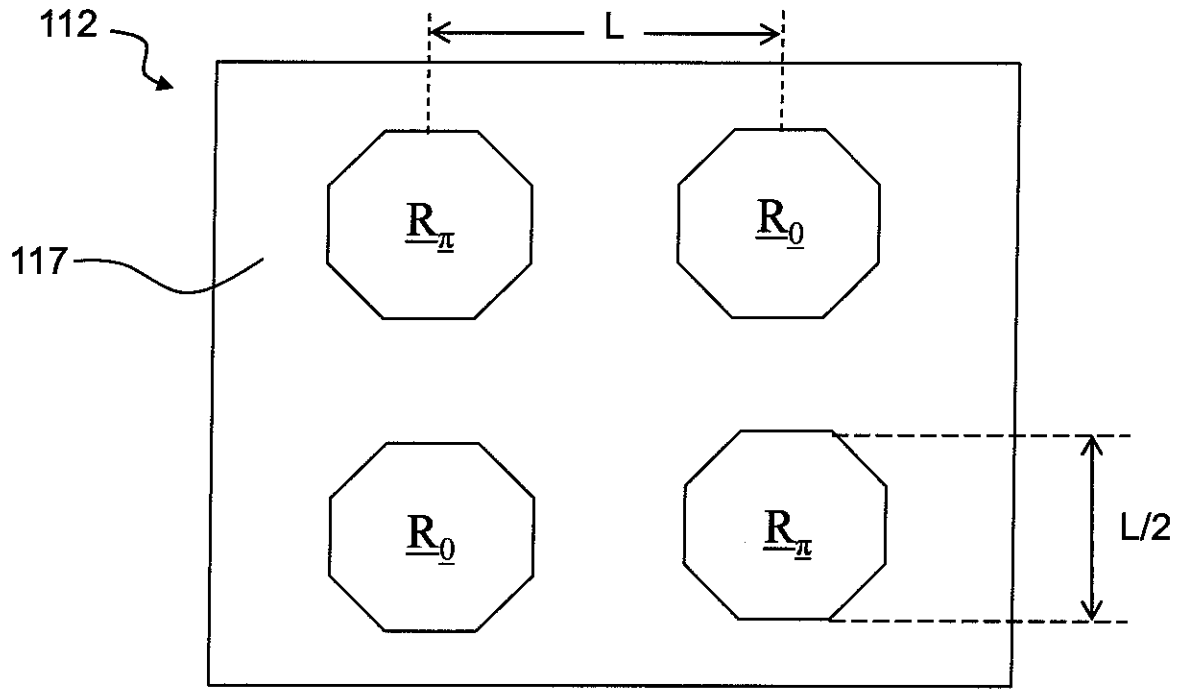

FIG. 9A

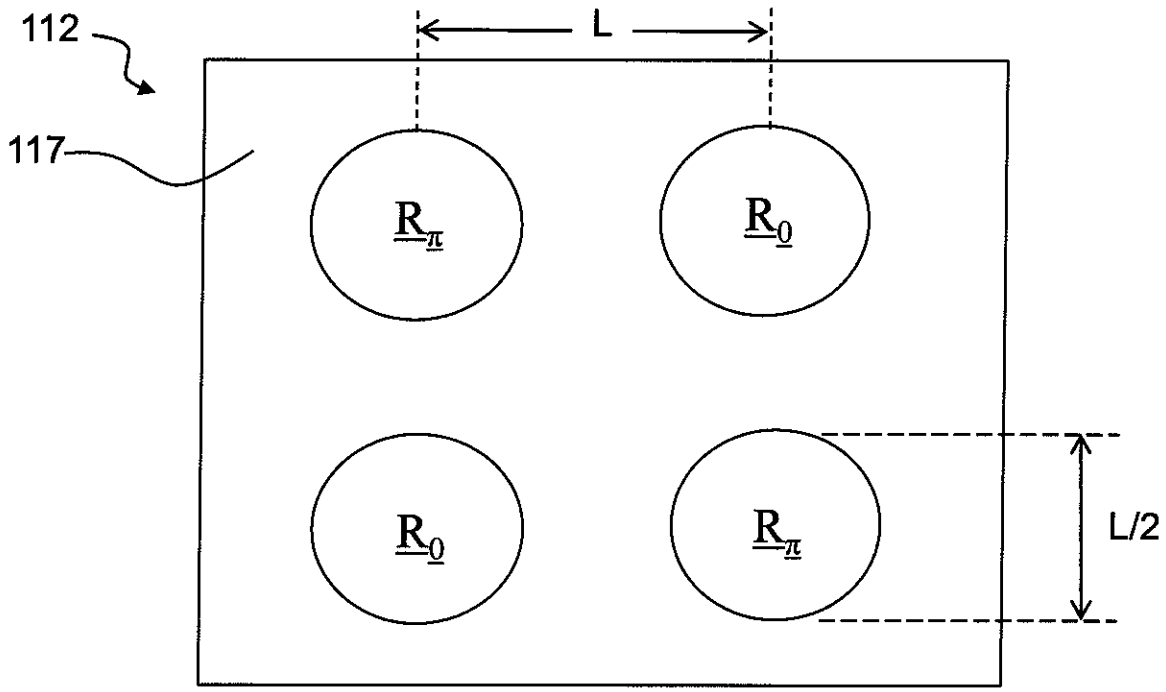

FIG. 9B

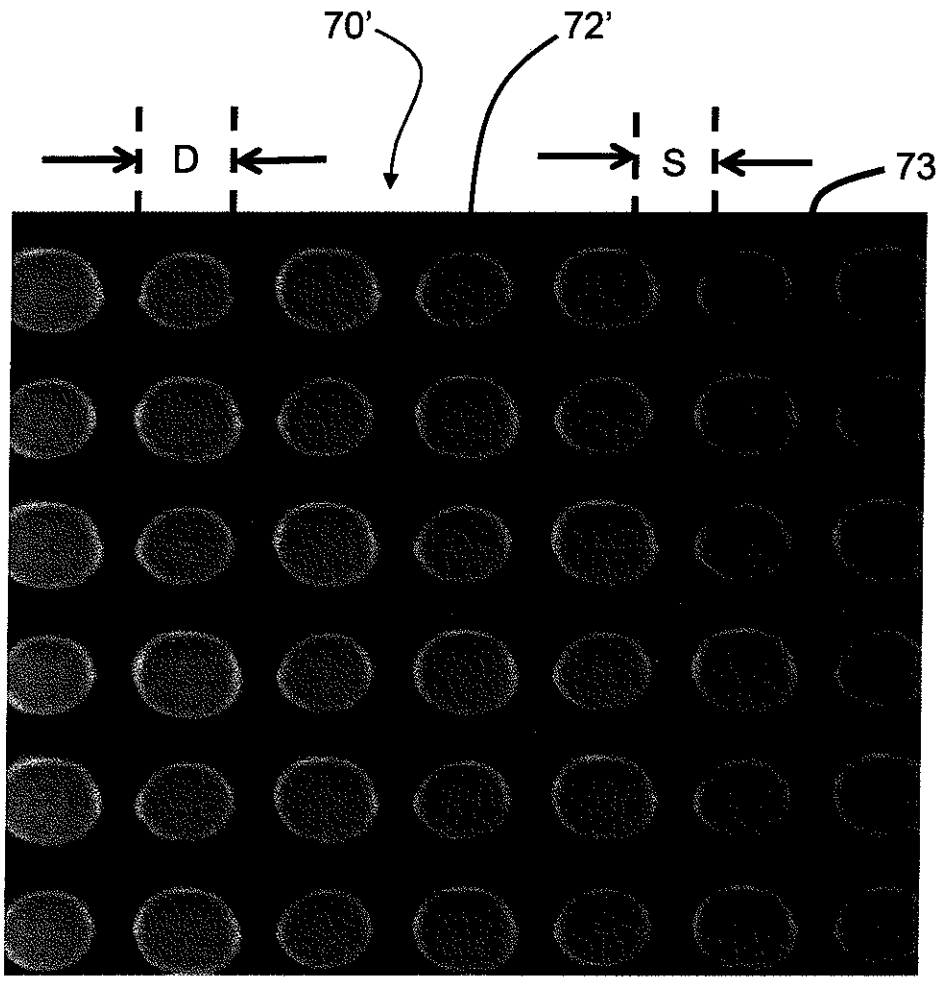

FIG. 10

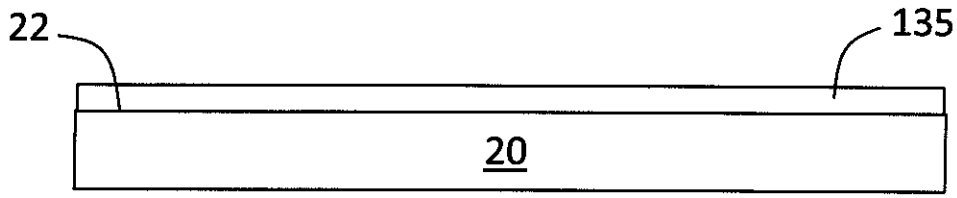

FIG. 11A

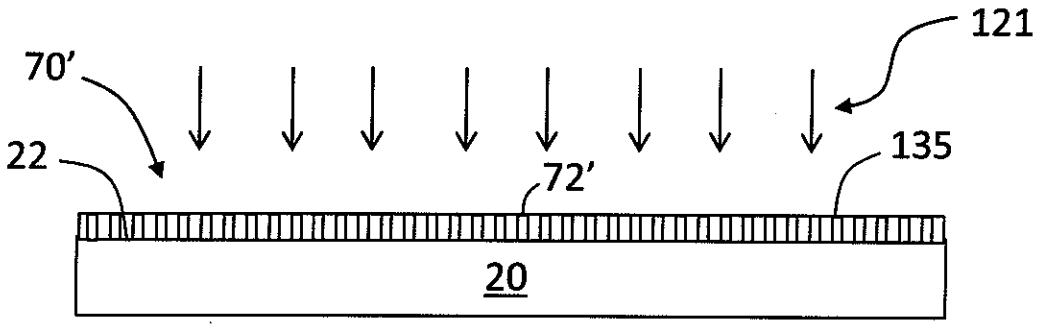

FIG. 11B

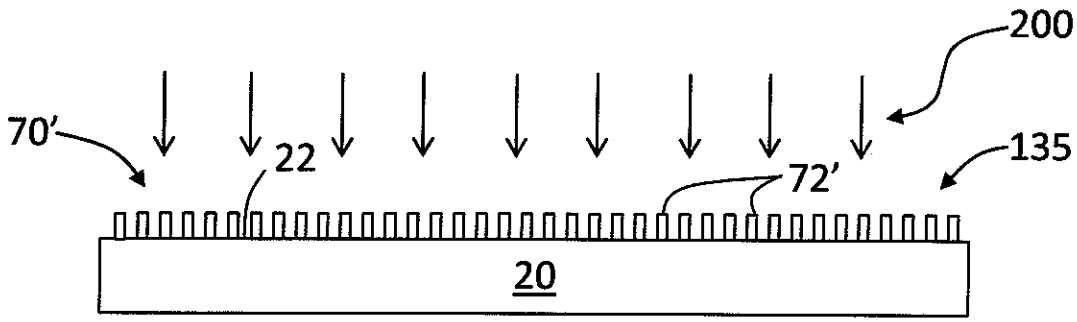

FIG. 11C

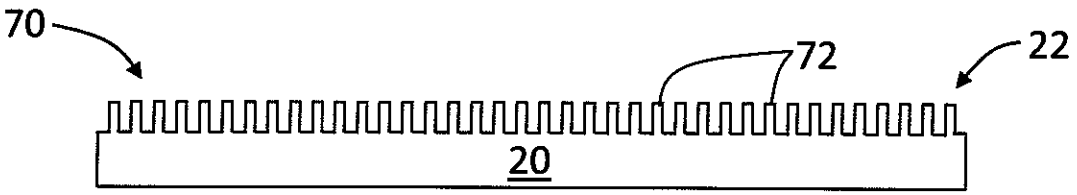

FIG. 11D