(12) INTERNATIONAL APPLICATION PUBLISHED UNDER THE PATENT COOPERATION TREATY (PCT)

(19) World Intellectual Property Organization
International Bureau

G00002

(43) International Publication Date
24 April 2003 (24.04.2003)

PCT

(10) International Publication Number
WO 03/033190 A1

(51) International Patent Classification[7]: B21F 27/16

(21) International Application Number: PCT/US01/51610

(22) International Filing Date:
13 November 2001 (13.11.2001)

(25) Filing Language: English

(26) Publication Language: English

(30) Priority Data:
09/723,668 28 November 2000 (28.11.2000) US

(71) Applicant: SEALY TECHNOLOGY LLC [US/US]; One Office Parkway, Trinity, NC 27370 (US).

(71) Applicants and
(72) Inventors: DEMOSS, Larry [US/US]; 3204 Peninsula Drive, Jamestown, NC 27282 (US). ZHOU, Joe [CN/US]; 62 Crystal Court, Brunswick, OH 44212 (US).

(74) Agent: SCOTT, James, C.; Arter & Hadden LLP, 1100 Huntington Building, 925 Euclid Avenue, Cleveland, OH 44115 (US).

(81) Designated States *(national)*: AE, AG, AL, AM, AT, AU, AZ, BA, BB, BG, BR, BY, BZ, CA, CH, CN, CO, CR, CU, CZ, DE, DK, DM, DZ, EC, EE, ES, FI, GB, GD, GE, GH, GM, HR, HU, ID, IL, IN, IS, JP, KE, KG, KP, KR, KZ, LC, LK, LR, LS, LT, LU, LV, MA, MD, MG, MK, MN, MW, MX, MZ, NO, NZ, OM, PH, PL, PT, RO, RU, SD, SE, SG, SI, SK, SL, TJ, TM, TR, TT, TZ, UA, UG, UZ, VN, YU, ZA, ZW.

(84) Designated States *(regional)*: ARIPO patent (GH, GM, KE, LS, MW, MZ, SD, SL, SZ, TZ, UG, ZW), Eurasian patent (AM, AZ, BY, KG, KZ, MD, RU, TJ, TM), European patent (AT, BE, CH, CY, DE, DK, ES, FI, FR, GB, GR, IE, IT, LU, MC, NL, PT, SE, TR), OAPI patent (BF, BJ, CF, CG, CI, CM, GA, GN, GQ, GW, ML, MR, NE, SN, TD, TG).

[Continued on next page]

(54) Title: COIL AND COIL-HEAD FORMATION DIES FOR COILS WITH NON-CONVENTIONAL TERMINAL CONVOLUTIONS

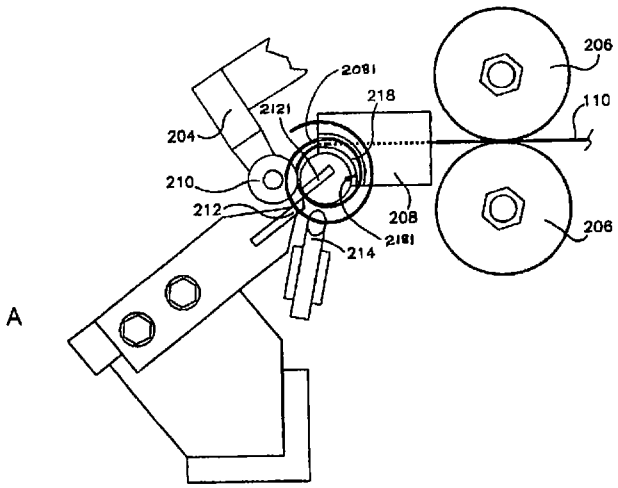

A

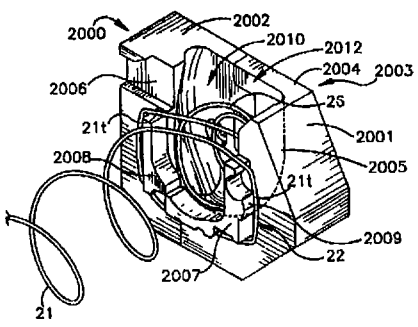

B

(57) Abstract: Machinery for automated manufacture of innerspring assemblies (1) for mattresses and flexible support structures includes coil formation devices (201, 202) configured to produce generally helical spring coils (2) having a terminal convolution (26) which extends beyond an end of the coil and a conveyor system (301, 302) having a plurality of flights (308) connected to a chain (315) and driven by an index driver (320) which delivers formed coils to an innerspring assembler (500). A coil forming block (208) on a coiler machine has a cavity (218) in which a terminal convolution of the coil is formed, and from which the coil is cut by a cutter (212) which extends into the cavity. Coil head formation dies (2000) at coil head forming stations (230, 240) of the coil forming machine also have a cavity (2010) for receiving a terminal convolution of a coil, and flanges (2007, 2008) which surround the cavity and provide a punch set for punches (232) which form a coil head proximate to the terminal convolution in the die.

162162

WO 03/033190 A1

Published:
— *with international search report*

For two-letter codes and other abbreviations, refer to the "Guidance Notes on Codes and Abbreviations" appearing at the beginning of each regular issue of the PCT Gazette.