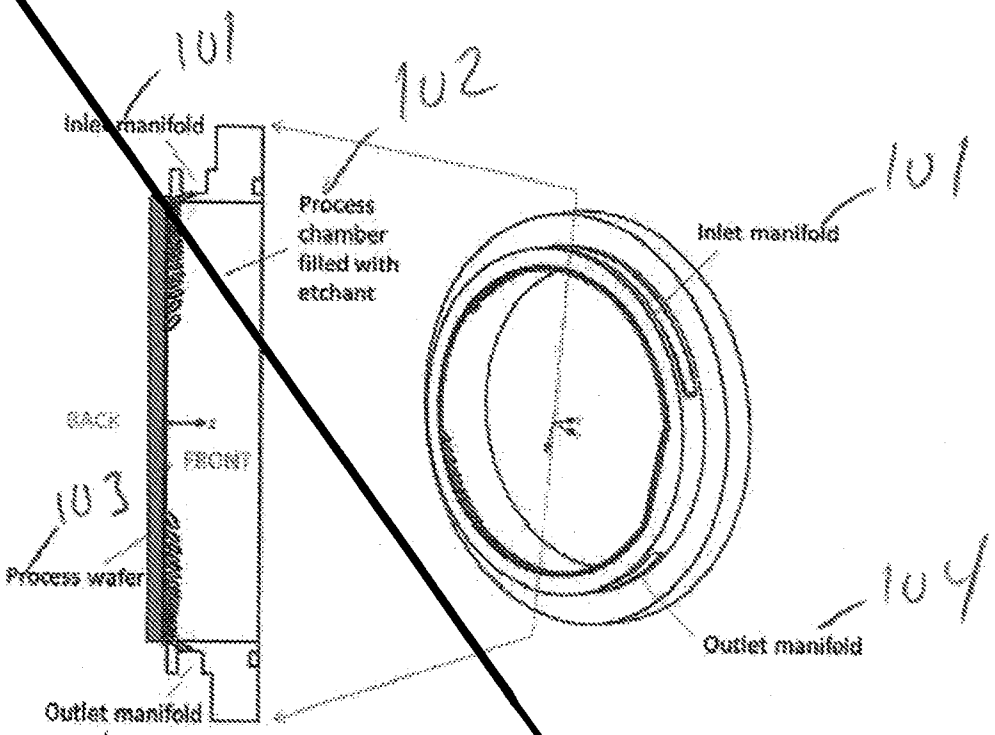
101
Inlet manifold
102
Process chamber filled with etchant
BACK
FRONT
103
Process water
Outlet manifold
104
101
Inlet manifold
104
Outlet manifold

Figure 1

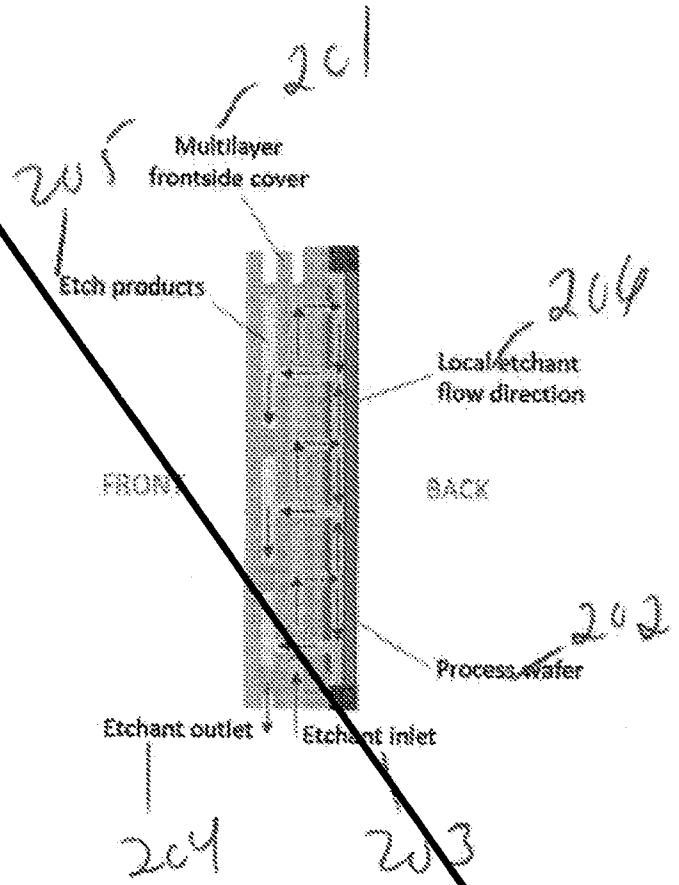
201
Multilayer frontside cover
205
Etch products
204
Local etchant flow direction
FRONT
BACK
202
Process wafer
Etchant outlet
Etchant inlet
204
203

Figure 2

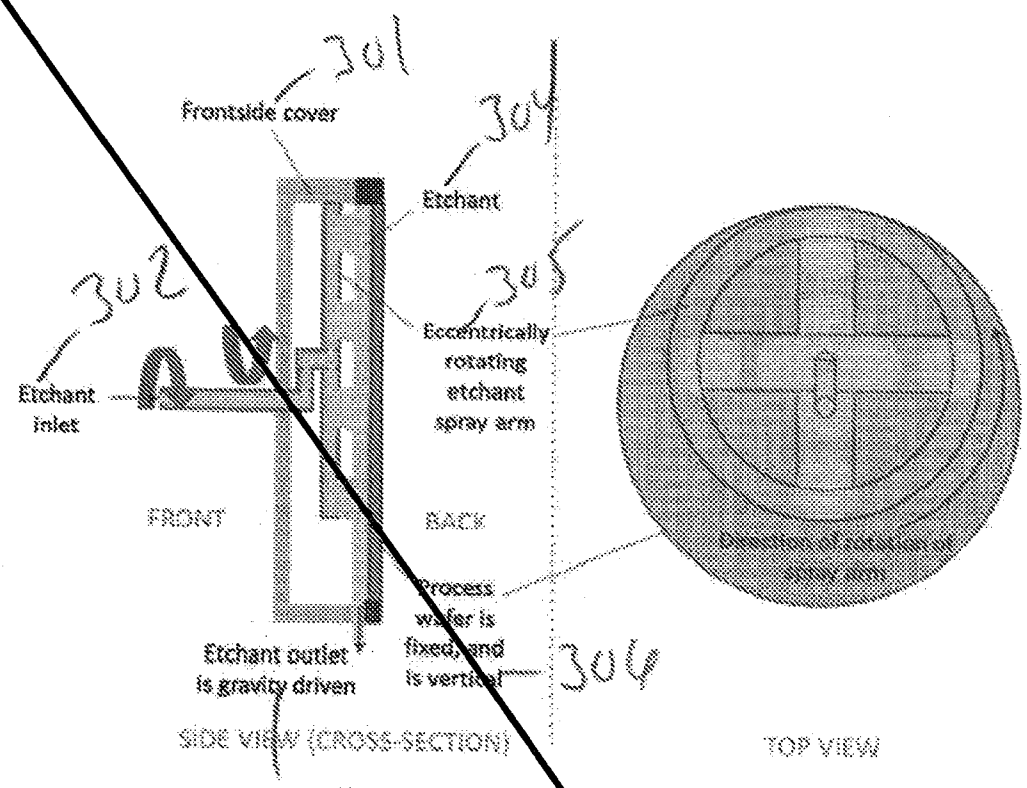

Figure 3A

Figure 3B

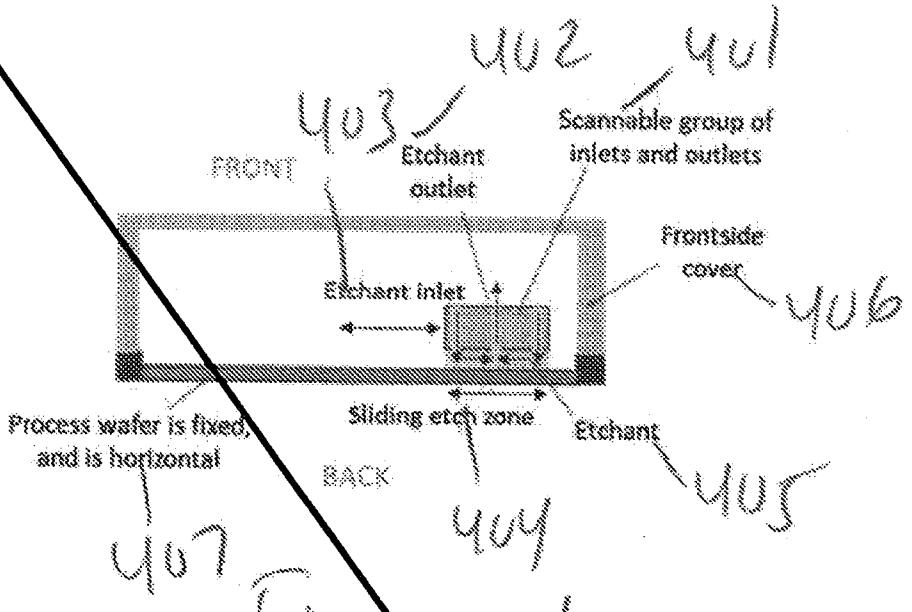
402
401
403
Scannable group of inlets and outlets
FRONT
Etchant outlet
Frontside cover
406
Etchant inlet
Process wafer is fixed, and is horizontal
Sliding etch zone
Etchant
405
BACK
404
407

Figure 4

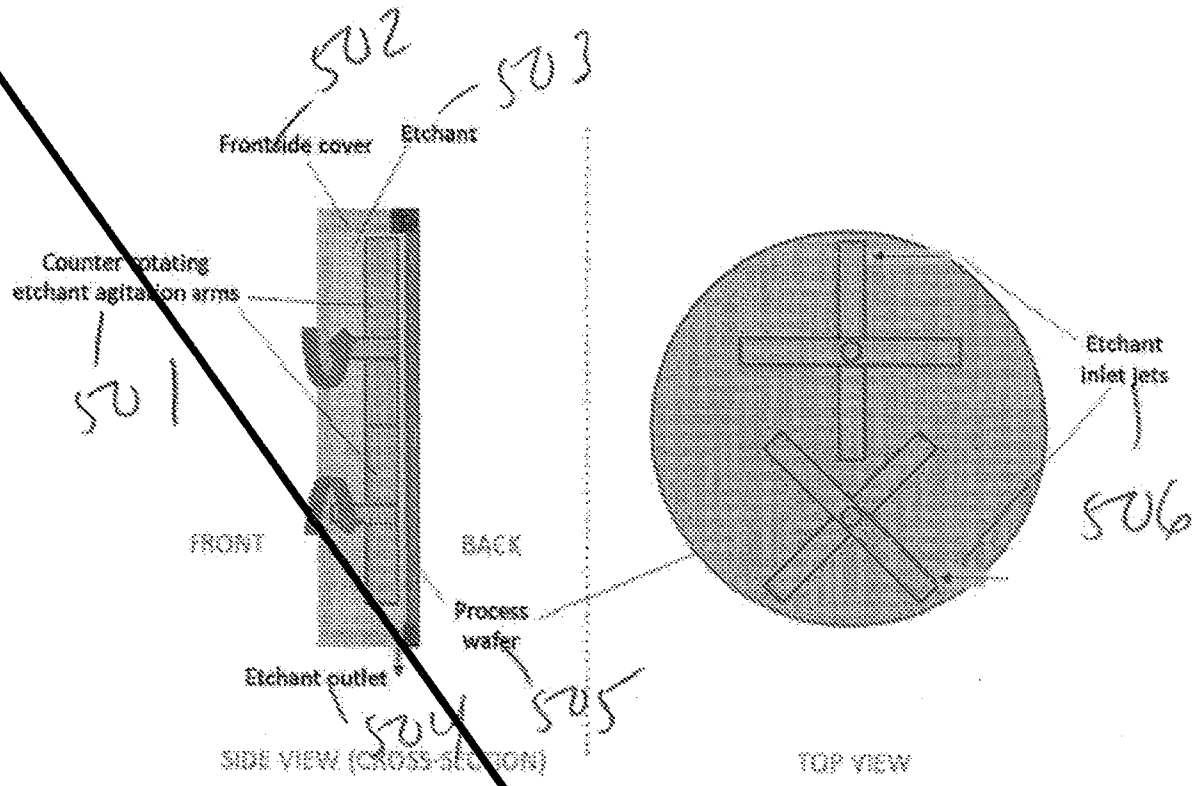

Figure 5

Figure 5B

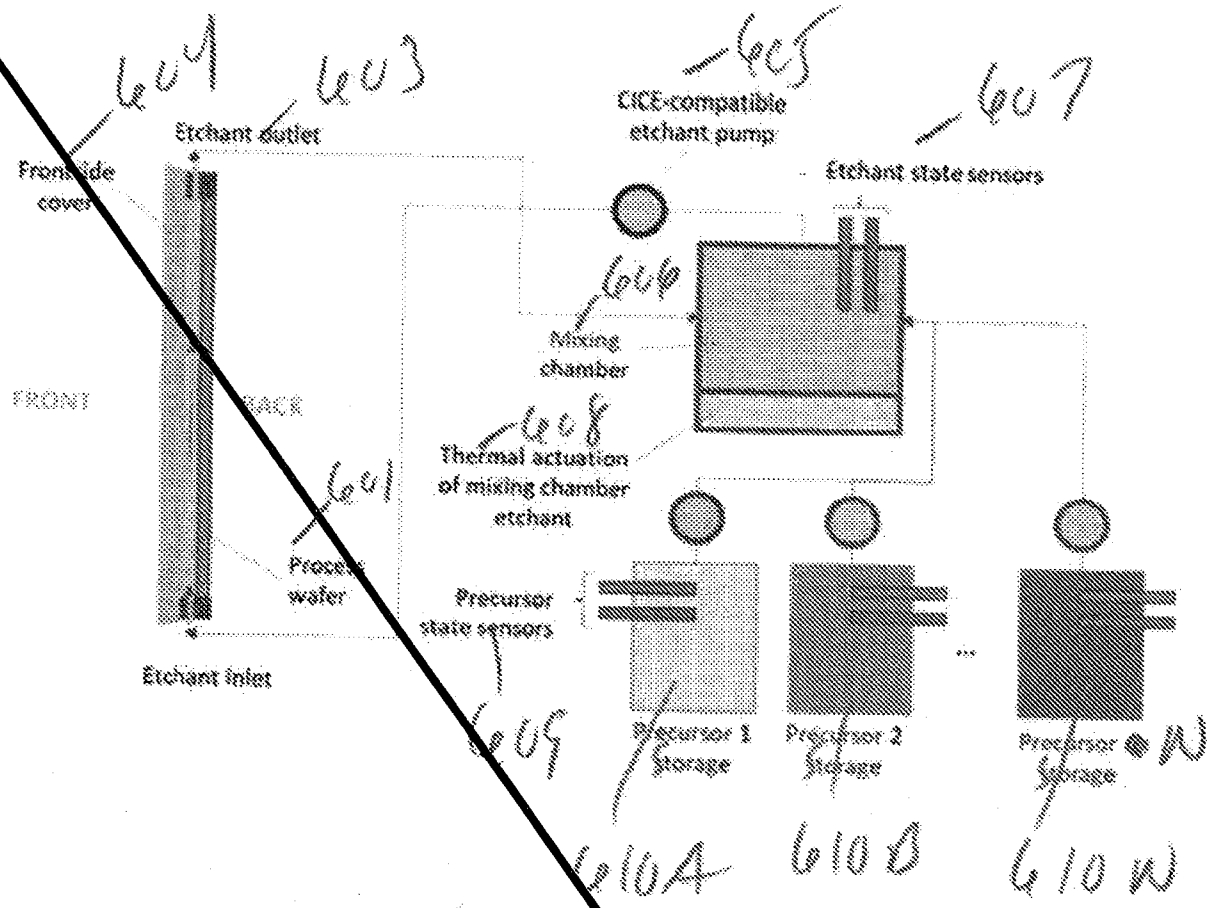
604
603
605
607
Etchant outlet
CICE-compatible etchant pump
Etchant state sensors
Front side cover
606
Mixing chamber
FRONT
BACK
608
Thermal actuation of mixing chamber etchant
601
Process wafer
Precursor state sensors
609
Etchant inlet
Precursor 1 Storage
Precursor 2 Storage
Precursor N Storage
610A
610B
610N

Figure 6

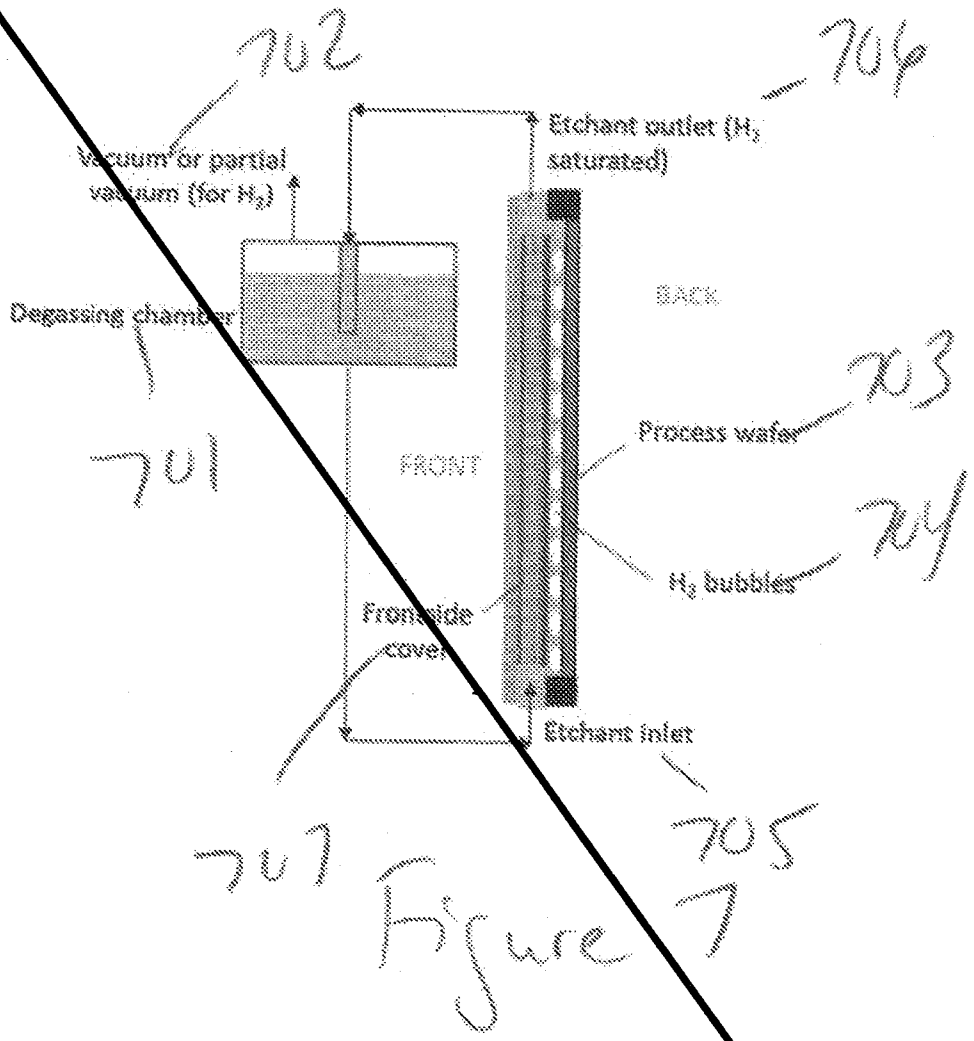
702
706
Etchant outlet (H_2 saturated)
Vacuum or partial vacuum (for H_2)
Degassing chamber
701
BACK
703
Process wafer
FRONT
704
H_2 bubbles
Front side cover
701
Etchant inlet
705

Figure 7

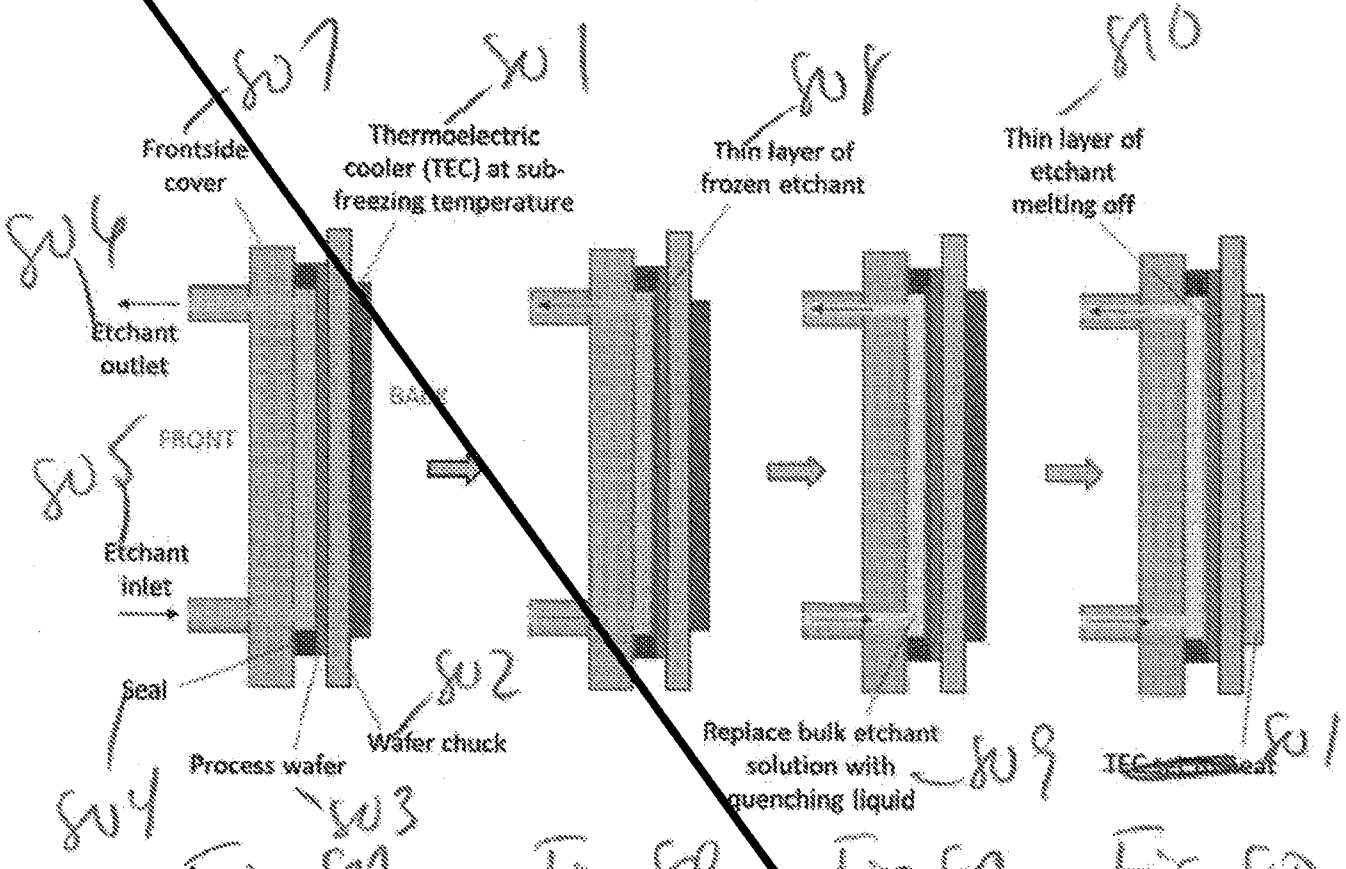

Fig. 8A Fig. 8B Fig. 8C Fig. 8D

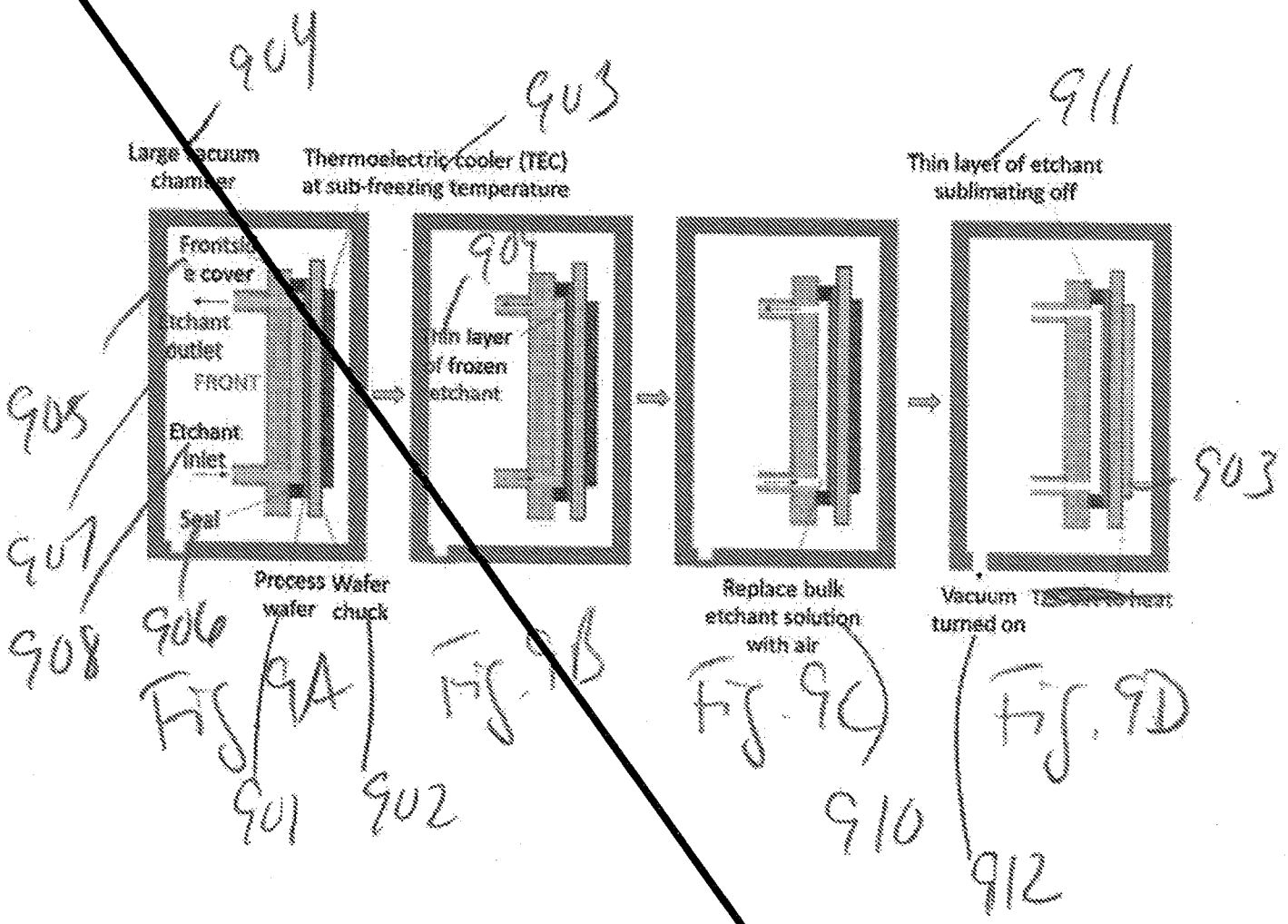

FIG. 9A FIG. 9B FIG. 9C FIG. 9D

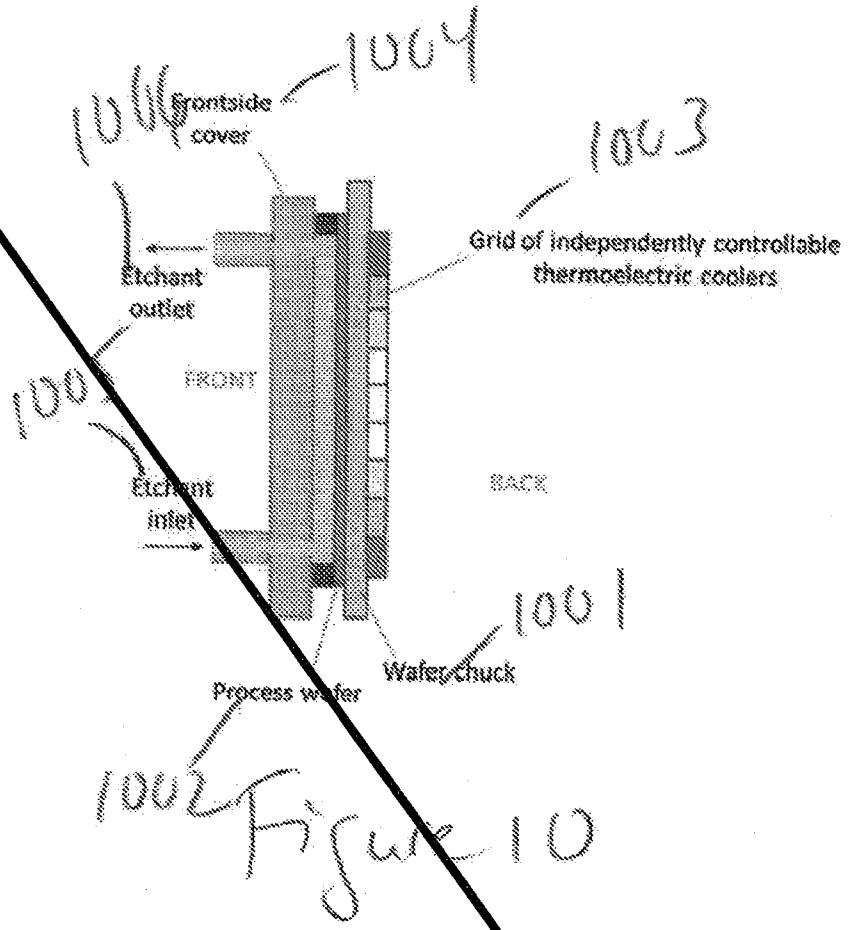
1004
1006
Frontside cover
1003
Grid of independently controllable thermoelectric coolers
Etchant outlet
1005
FRONT
BACK
Etchant inlet
1001
Wafer chuck
Process wafer
1002

Figure 10

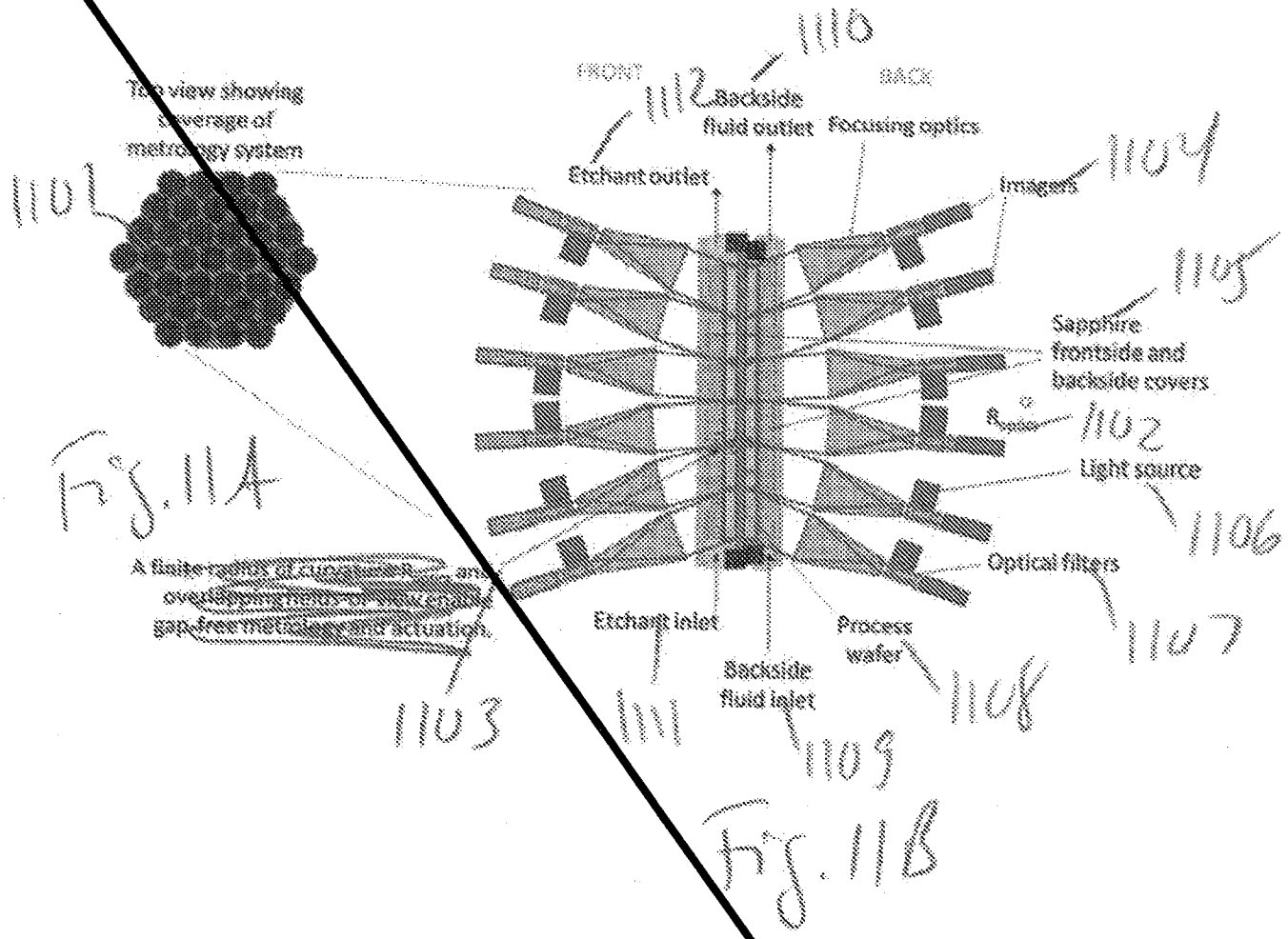

Fig. 11A

Fig. 11B

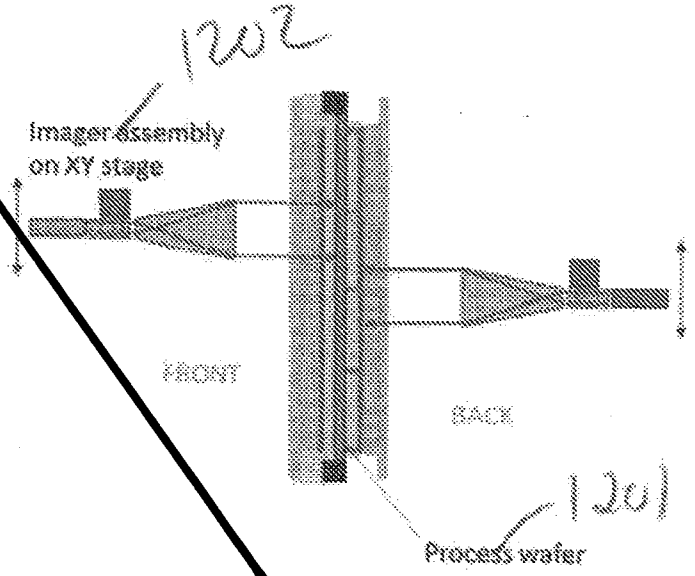
1202
Imager assembly
on XY stage
FRONT
BACK
1201
Process wafer

Figure 12

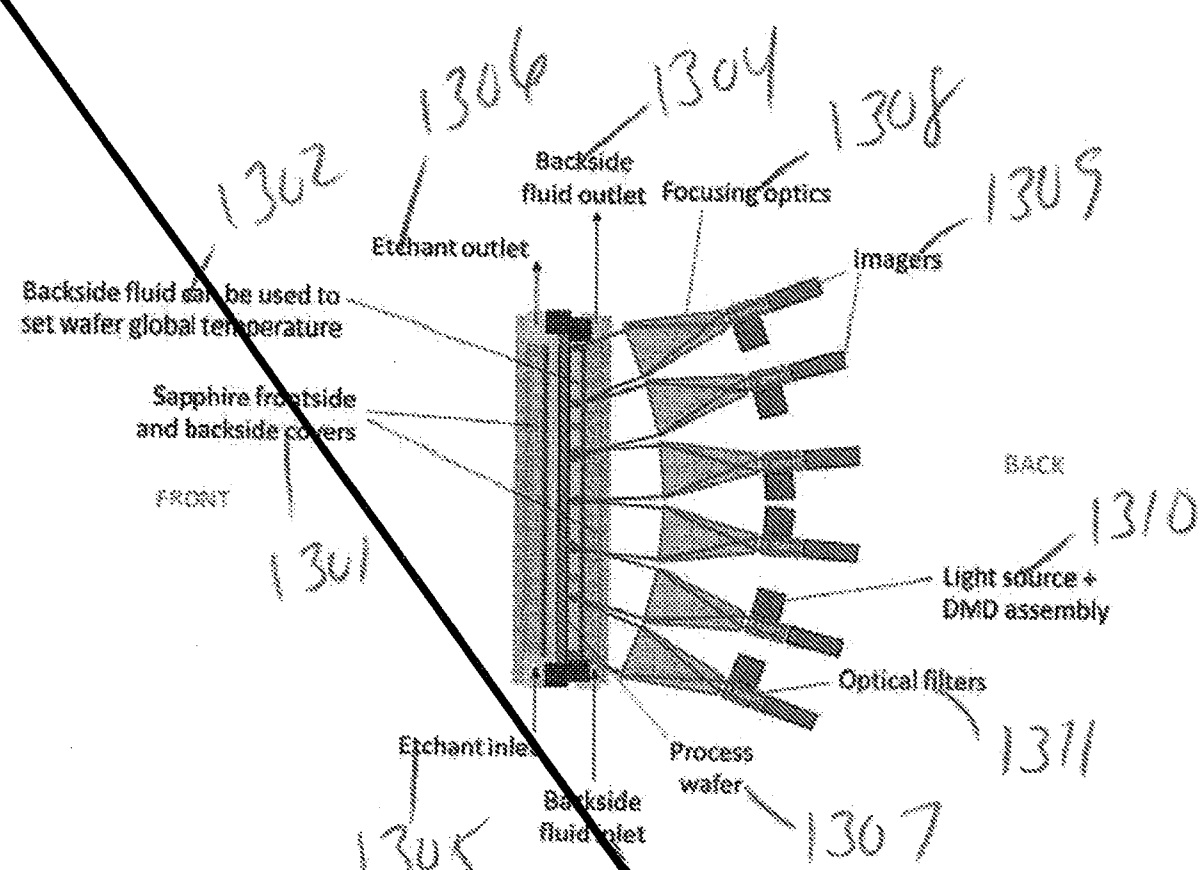
1306
1304
1308
1302
Backside fluid outlet
Focusing optics
1309
Etchant outlet
Imagers
Backside fluid can be used to set wafer global temperature
Sapphire frontside and backside covers
BACK
FRONT
1310
1301
Light source + DMD assembly
Optical filters
1311
Etchant inlet
Process wafer
Backside fluid inlet
1305
1307
1303

Figure 13

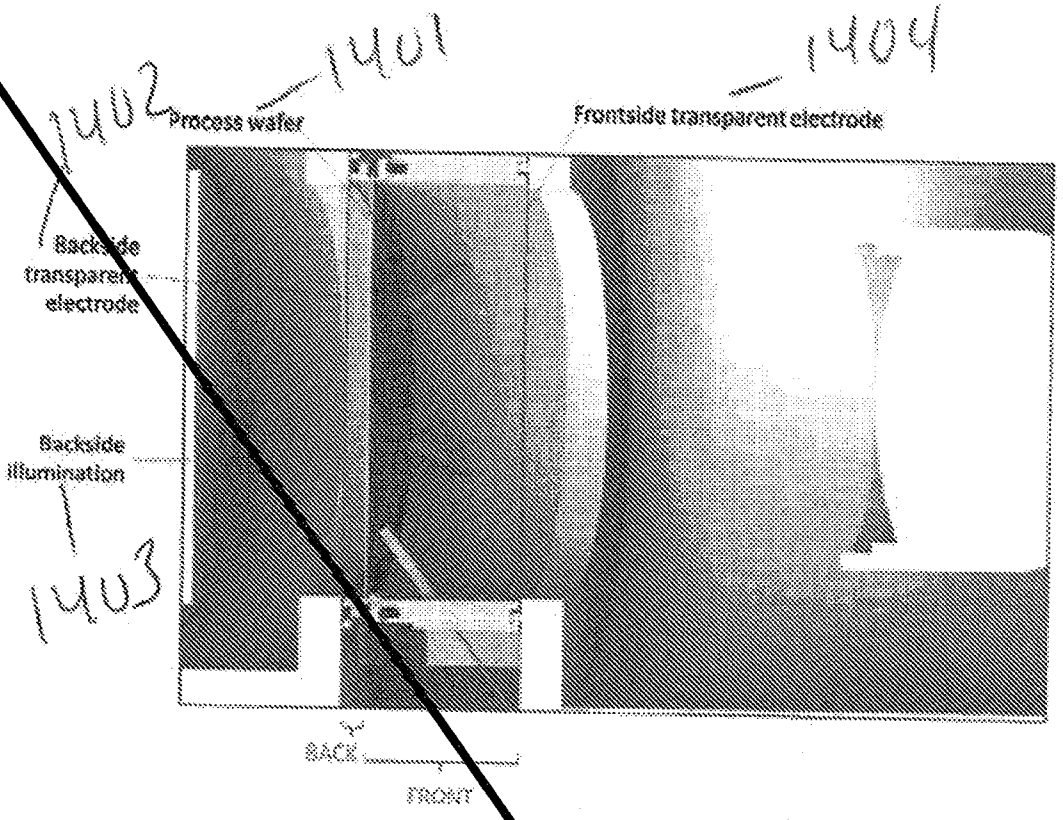
1401
1402
1403
1404
Process wafer
Frontside transparent electrode
Backside transparent electrode
Backside illumination
BACK
FRONT

Figure 14

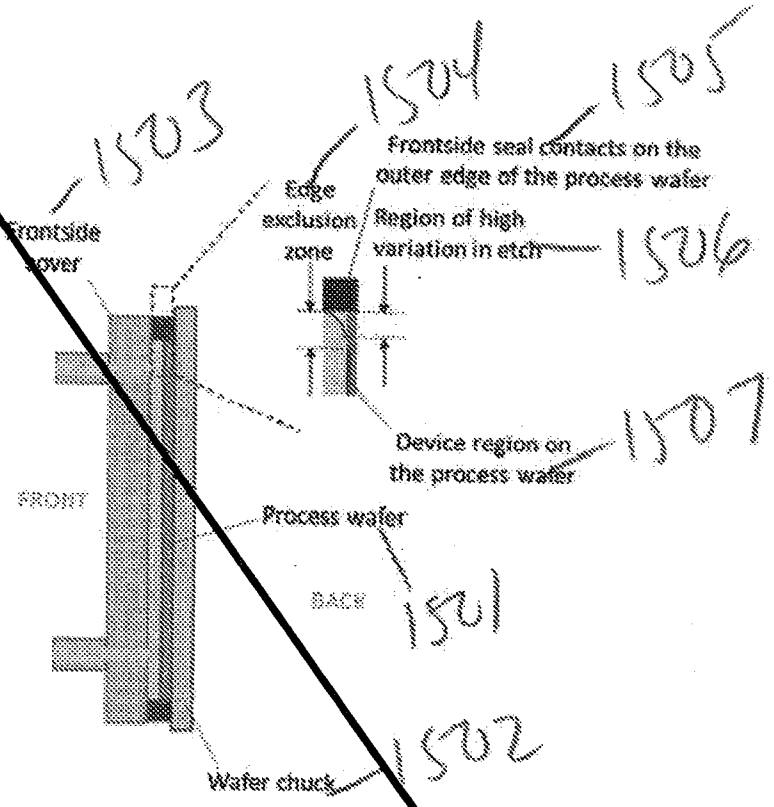
1503
1504
1505
Frontside seal contacts on the outer edge of the process wafer
Edge exclusion zone
Region of high variation in etch
1506
Frontside cover
1507
Device region on the process wafer
FRONT
Process wafer
BACK
1501
1502
Wafer chuck

Figure 15

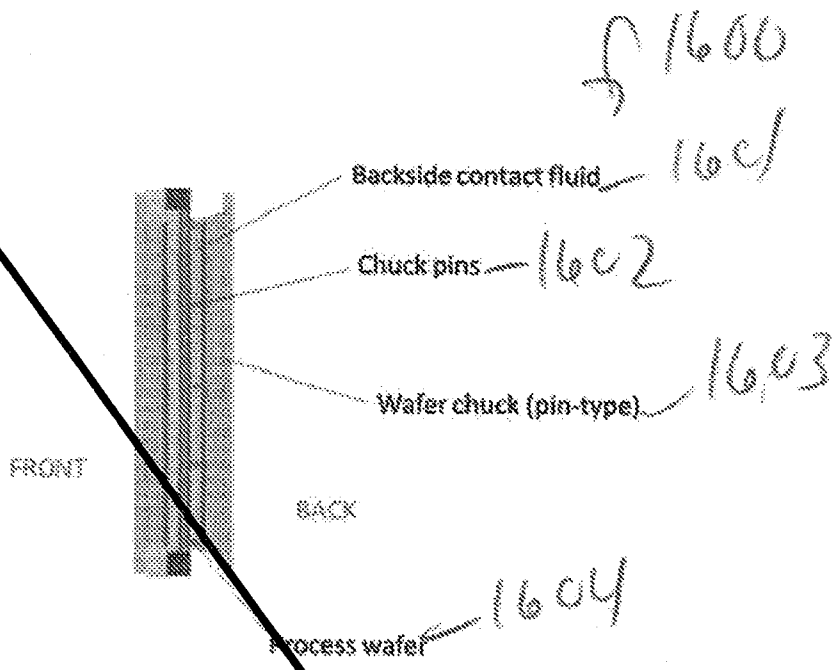
1600
Backside contact fluid
1601
Chuck pins
1602
Wafer chuck (pin-type)
1603
FRONT
BACK
1604
Process wafer

Figure 16

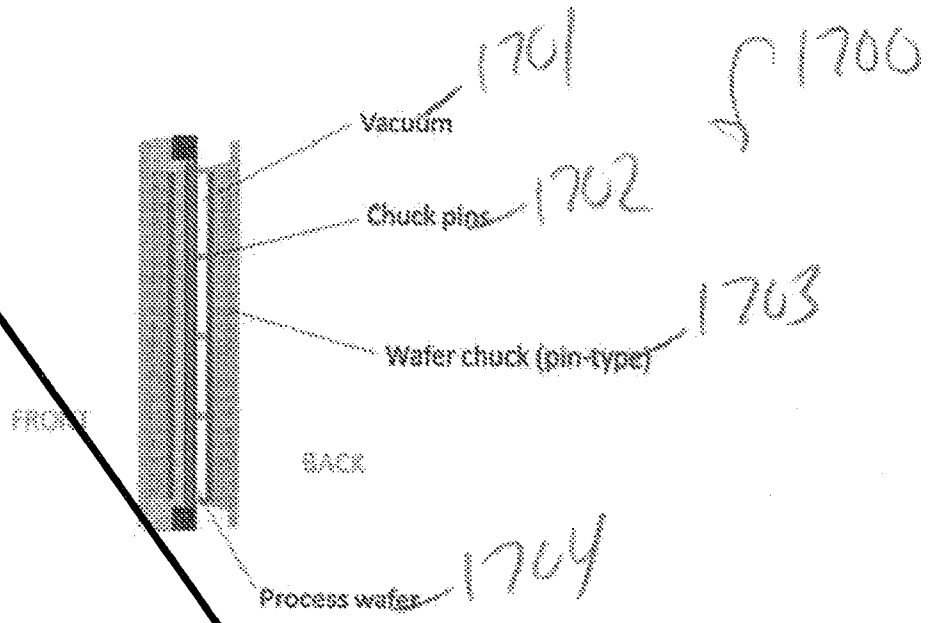
1701
1700
Vacuum
1702
Chuck pins
1703
Wafer chuck (pin-type)
FRONT
BACK
1704
Process wafer

Figure 17

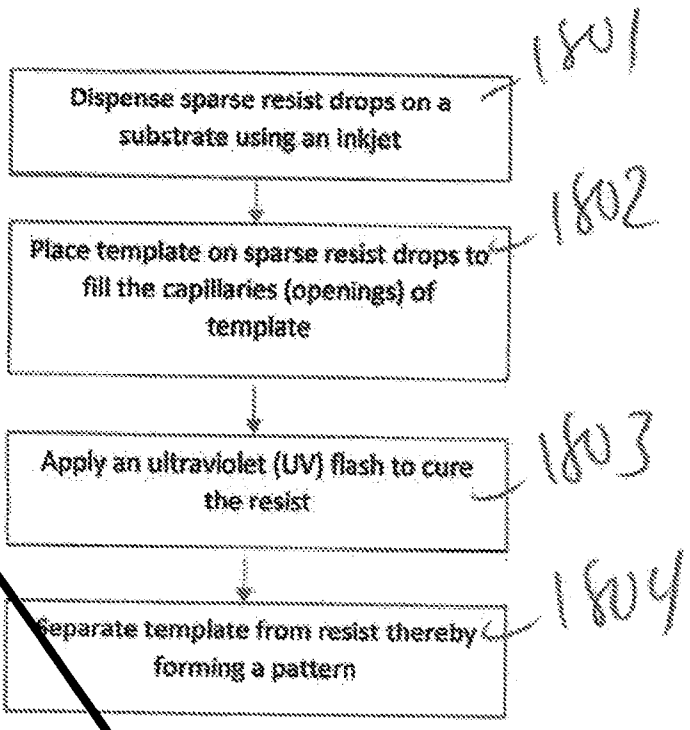
1800
1801
Dispense sparse resist drops on a substrate using an inkjet
1802
Place template on sparse resist drops to fill the capillaries (openings) of template
1803
Apply an ultraviolet (UV) flash to cure the resist
1804
Separate template from resist thereby forming a pattern

Figure 18

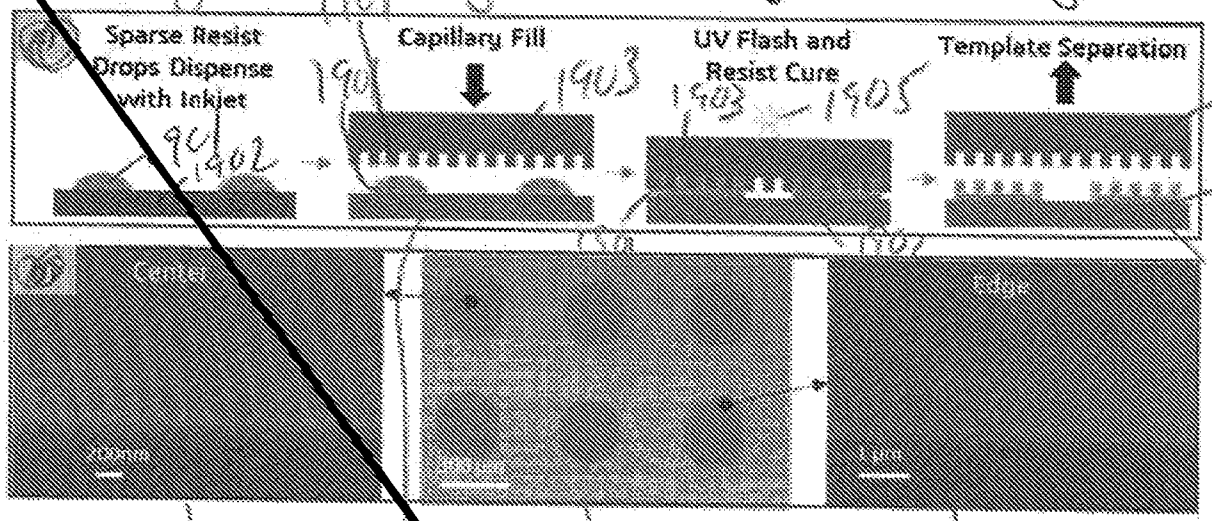

Fig. 19A Fig. 19B Fig. 19C Fig. 19D

Fig. 20A Fig. 20B Fig. 20C

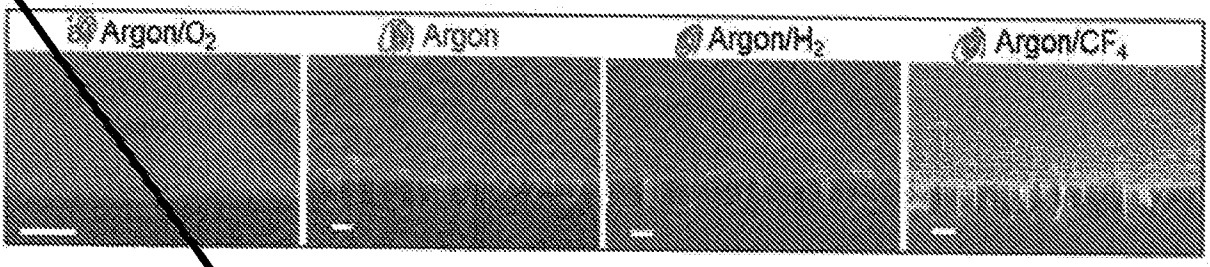

Fig 21A Fig.21B Fig.21C Fig.21D

Fig. 22A Fig. 22B Fig. 22C

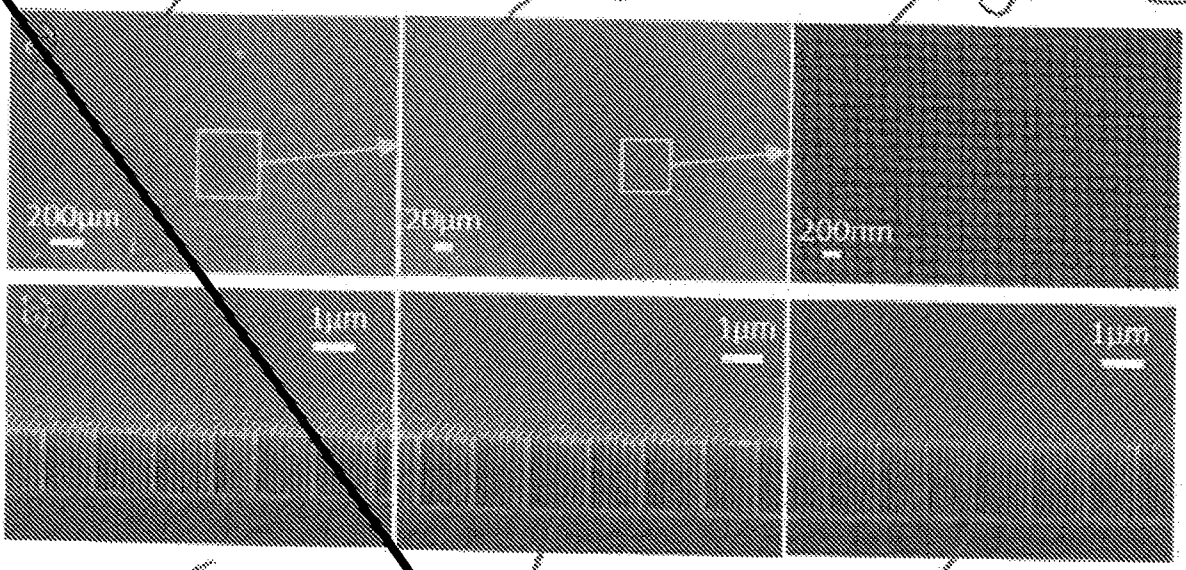

Fig. 22D Fig. 22E Fig. 22F

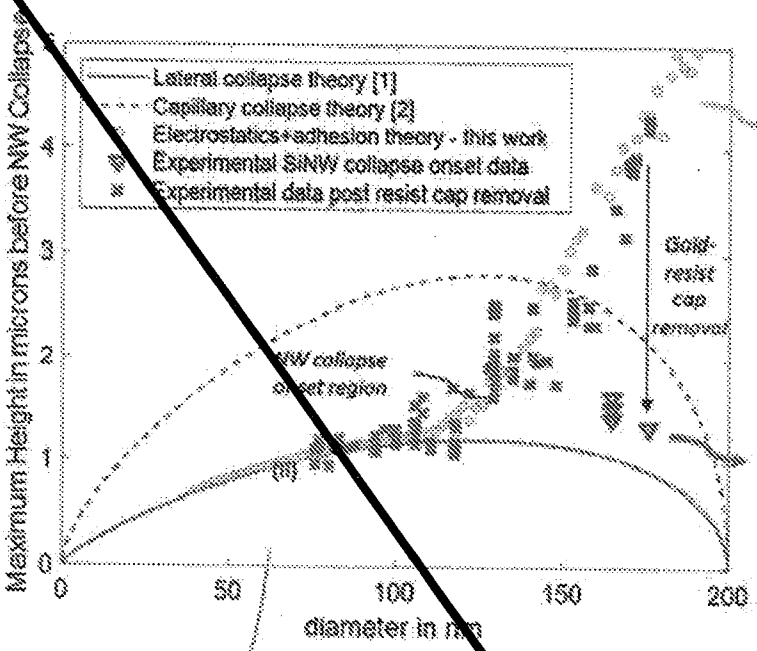

Fig 23A

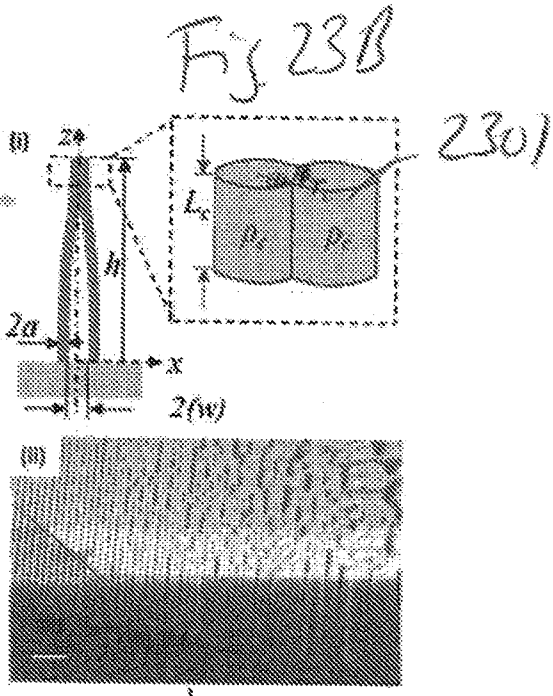

Fig 23B

2301

Fig 23C

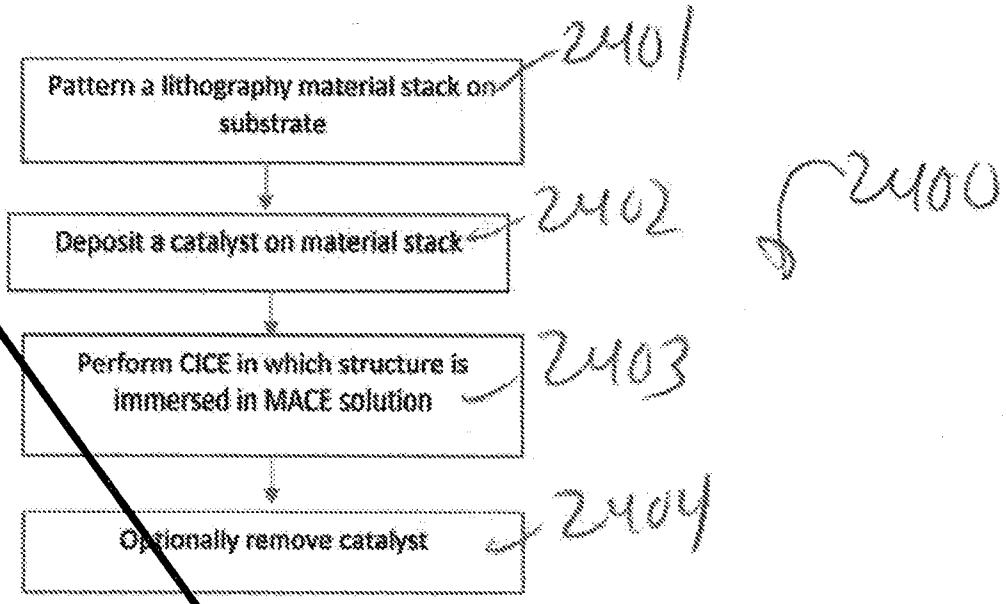
Pattern a lithography material stack on substrate
2401
Deposit a catalyst on material stack
2402
2400
Perform CICE in which structure is immersed in MACE solution
2403
Optionally remove catalyst
2404

Figure 24

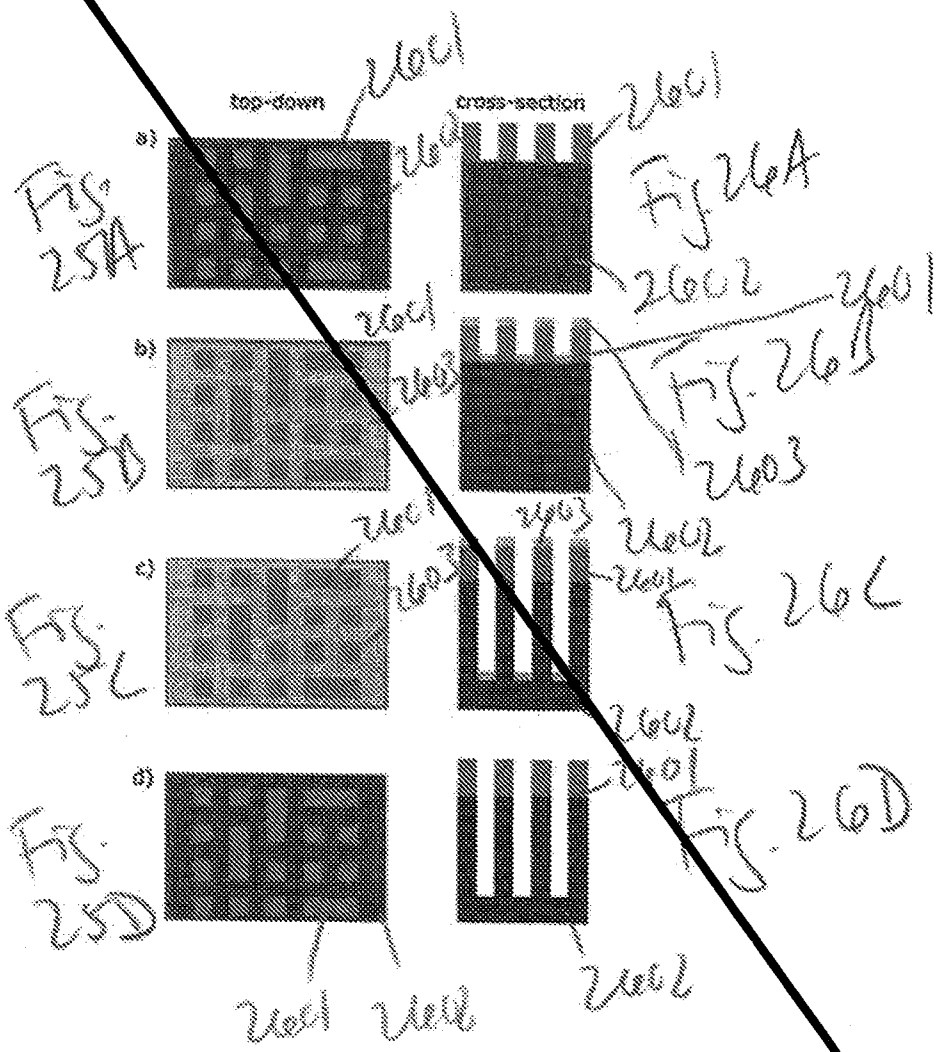
top-down
cross-section
a)
b)
c)
d)
2601
2602
2603
2604
FIG. 25A
FIG. 25B
FIG. 25C
FIG. 25D
FIG. 26A
FIG. 26B
FIG. 26C
FIG. 26D

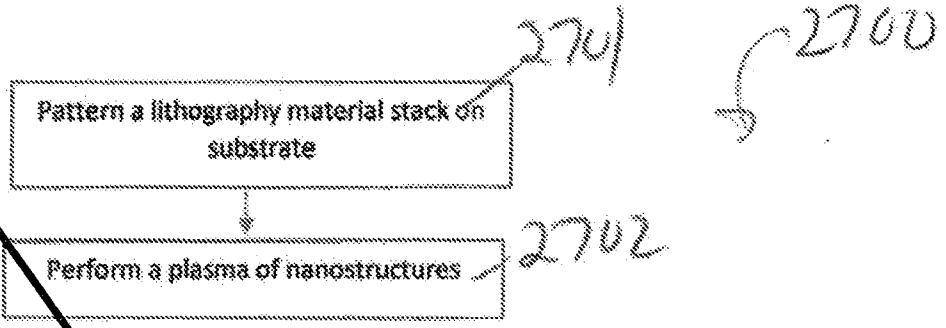
2700
2701
Pattern a lithography material stack on substrate
2702
Perform a plasma of nanostructures

Figure 27

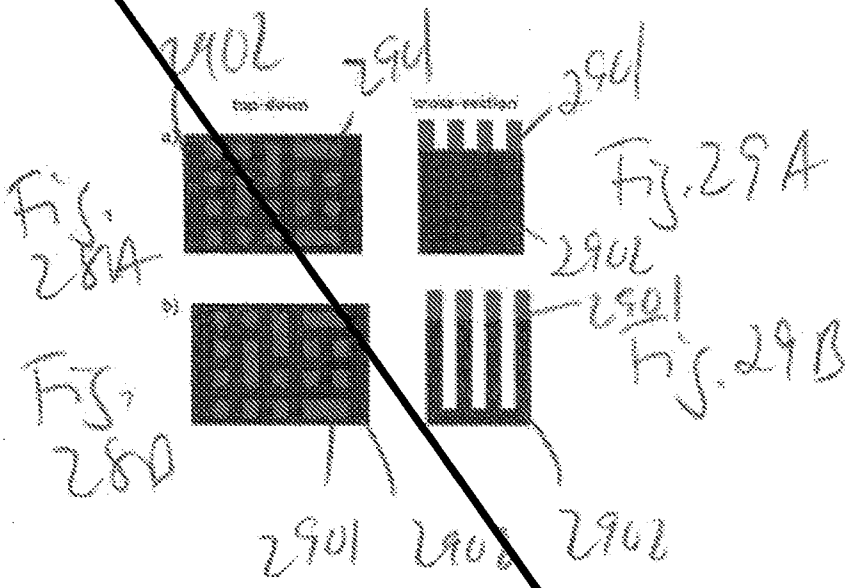

Fig. 28A

Fig. 28B

Fig. 29A

Fig. 29B

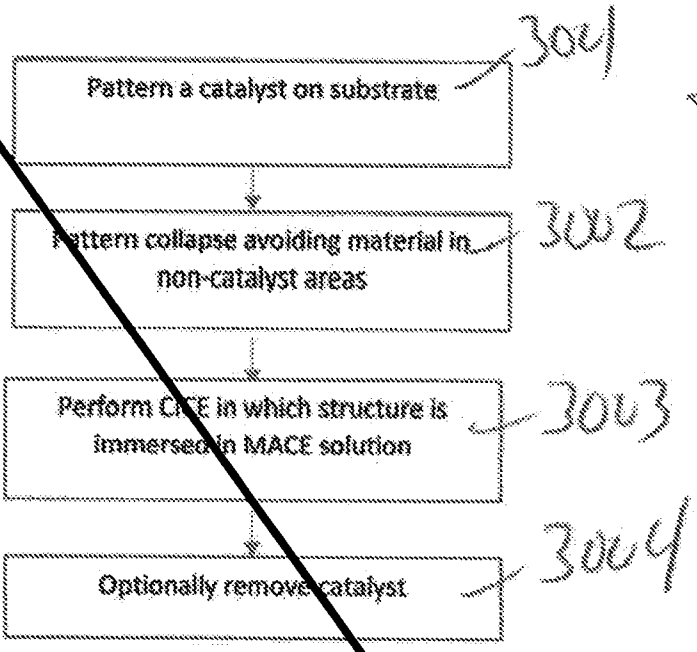
Pattern a catalyst on substrate
301
300
Pattern collapse avoiding material in non-catalyst areas
302
Perform CACE in which structure is immersed in MACE solution
303
Optionally remove catalyst
304

Figure 3C

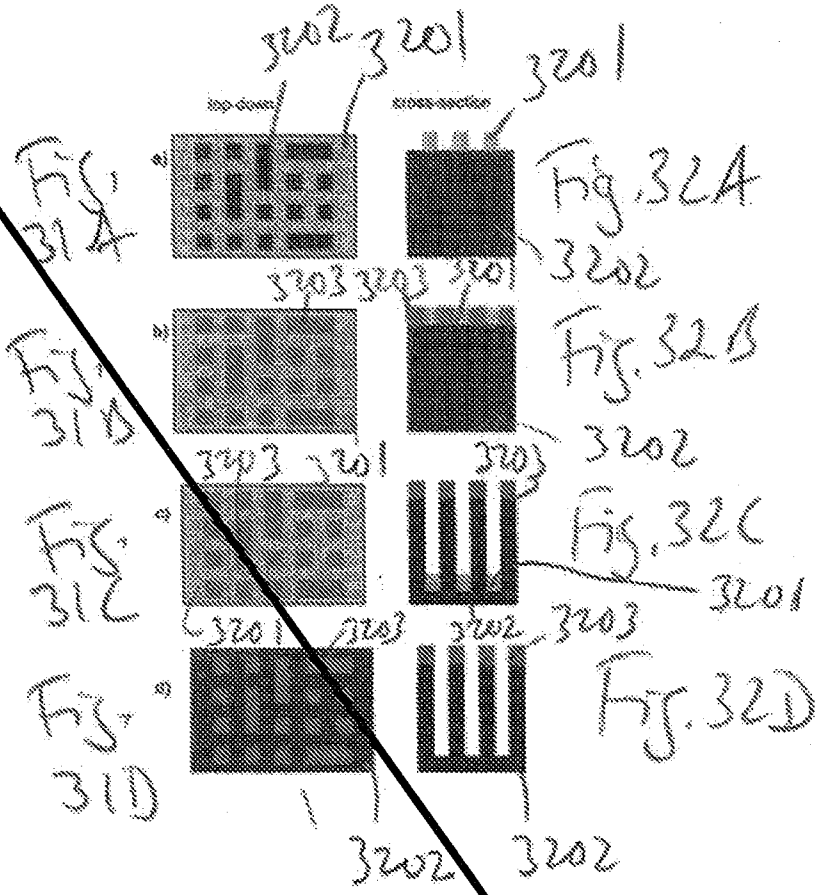
3202
3201
3201
Fig. 32A
3202
3203
3203
3201
3202
Fig. 32B
3203
3201
3203
Fig. 32C
3201
3201
3203
3202
Fig. 32D
3202
3202

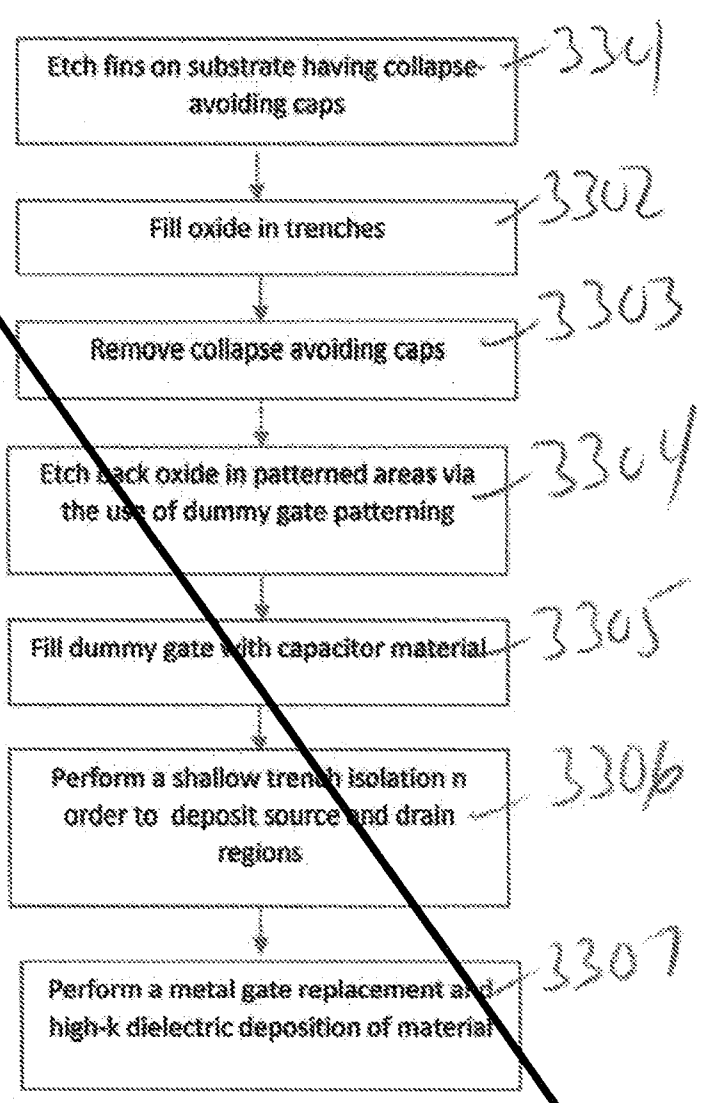
Etch fins on substrate having collapse-avoiding caps
3301
3300
Fill oxide in trenches
3302
Remove collapse avoiding caps
3303
Etch back oxide in patterned areas via the use of dummy gate patterning
3304
Fill dummy gate with capacitor material
3305
Perform a shallow trench isolation n order to deposit source and drain regions
3306
Perform a metal gate replacement and high-k dielectric deposition of material
3307

Figure 33

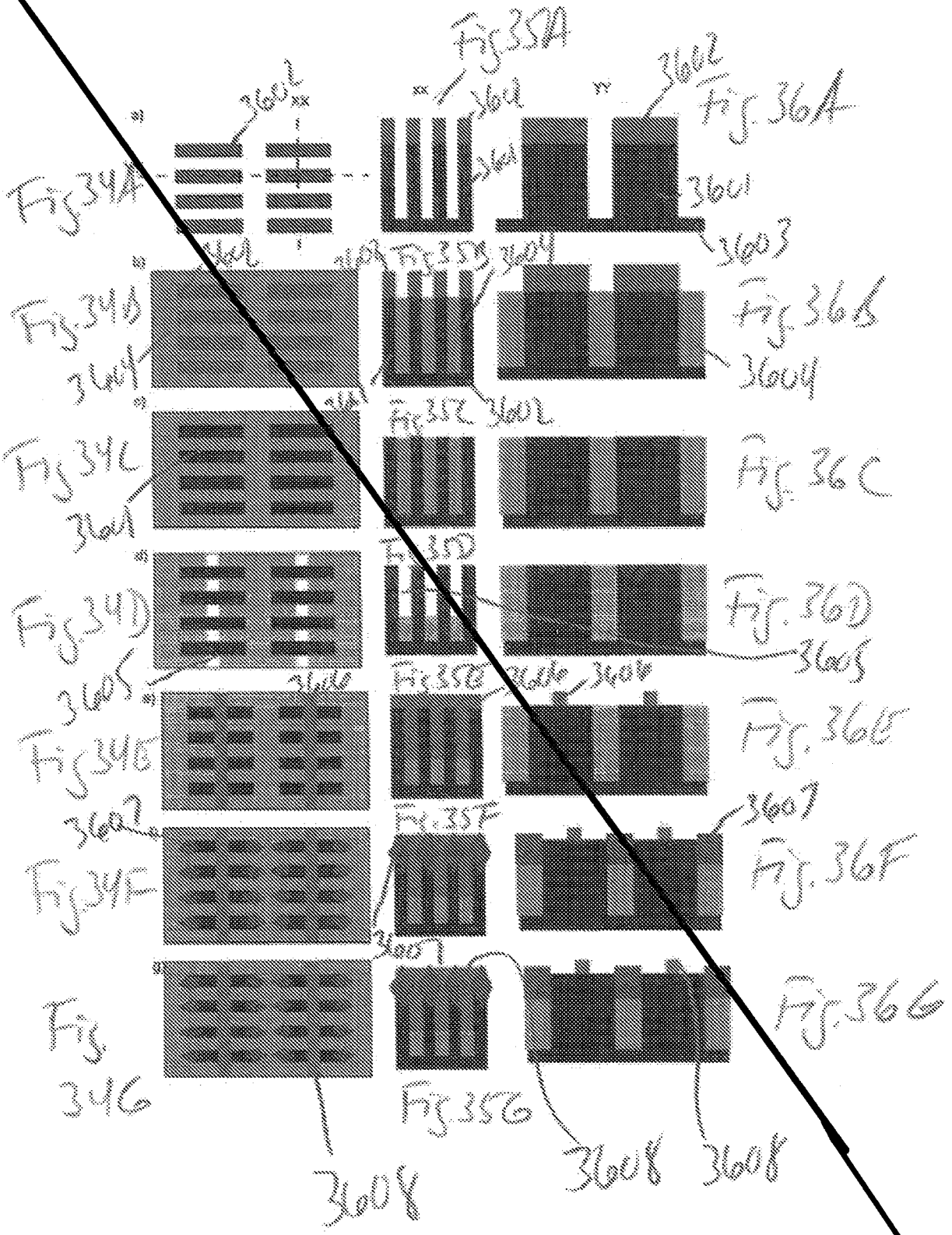
Fig 35A
Fig 35B
Fig 35C
Fig 35D
Fig 35E
Fig 35F
Fig 35G
Fig 34A
Fig 34B
Fig 34C
Fig 34D
Fig 34E
Fig 34F
Fig 34G
Fig 36A
Fig 36B
Fig 36C
Fig 36D
Fig 36E
Fig 36F
Fig 36G
3601
3602
3603
3604
3605
3606
3607
3608

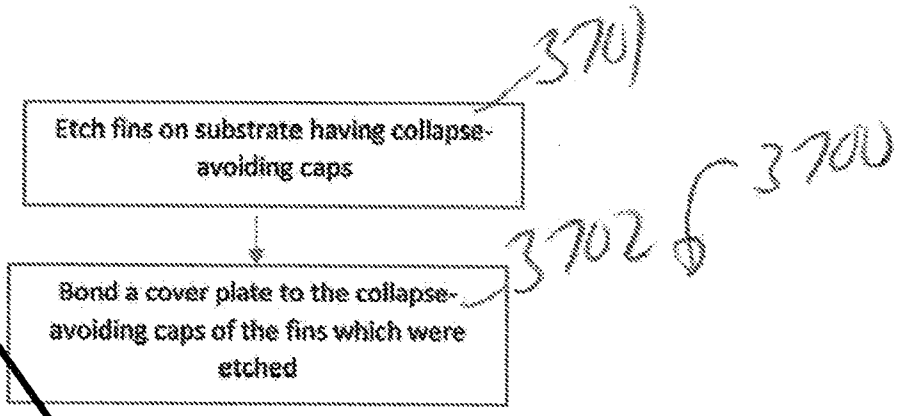
3704
Etch fins on substrate having collapse-avoiding caps
3702
Bond a cover plate to the collapse-avoiding caps of the fins which were etched
3700

Figure 37



Fig. 38A



Fig. 38B

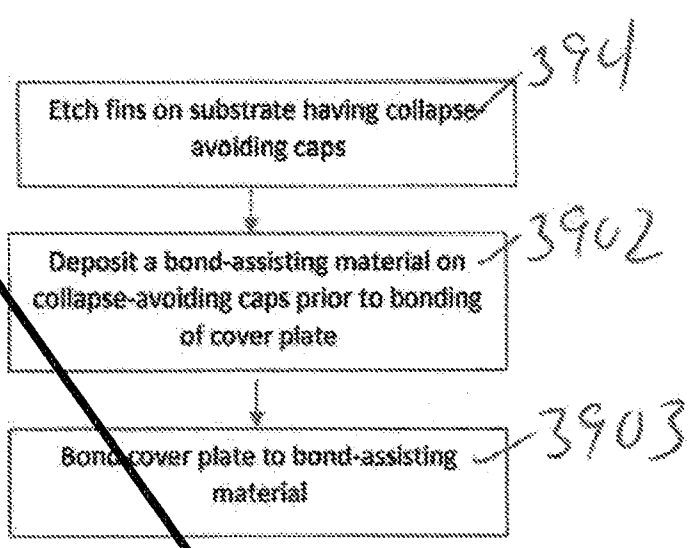
Etch fins on substrate having collapse-avoiding caps
3904
3900
Deposit a bond-assisting material on collapse-avoiding caps prior to bonding of cover plate
3902
Bond cover plate to bond-assisting material
3903

Figure 39

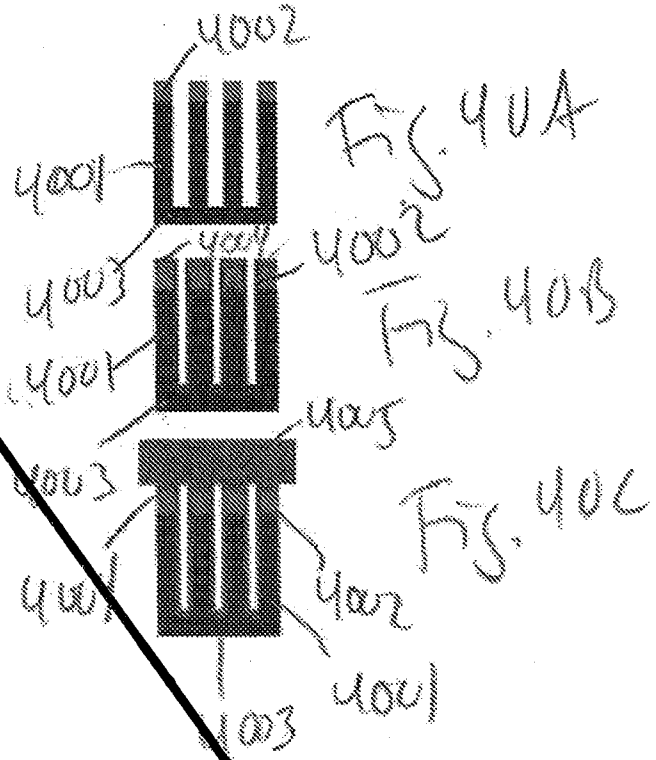

FIG. 4A

FIG. 4B

FIG. 4C

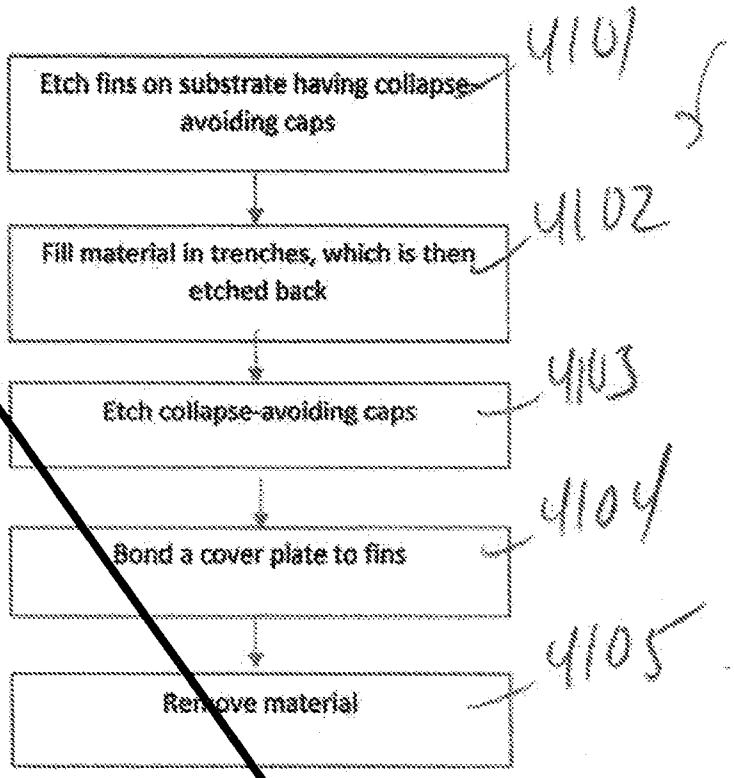
Etch fins on substrate having collapse-avoiding caps
4101
4100
Fill material in trenches, which is then etched back
4102
Etch collapse-avoiding caps
4103
Bond a cover plate to fins
4104
Remove material
4105

Figure 41

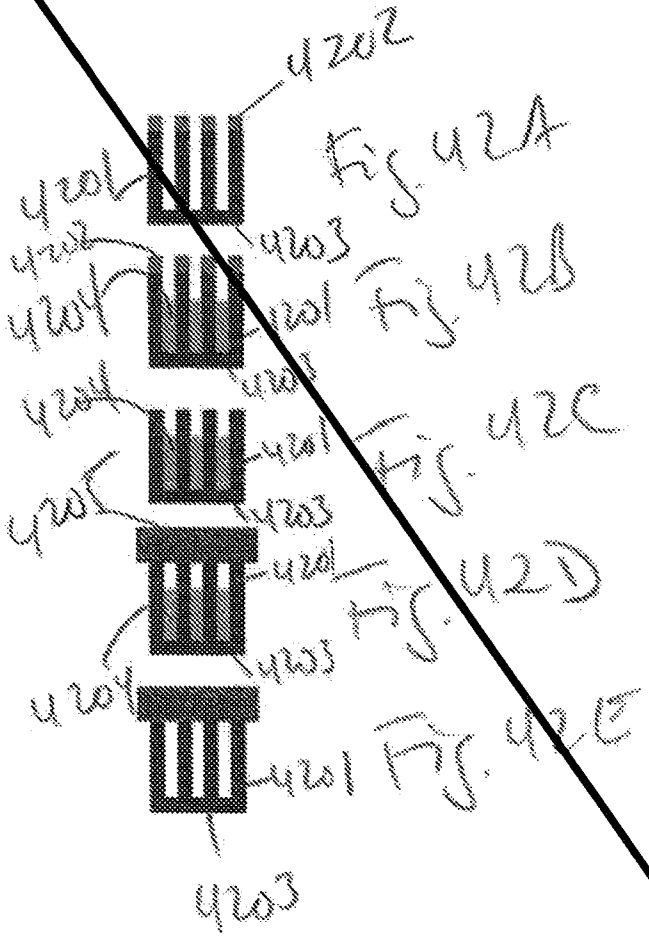

Fig. 42A

Fig. 42B

Fig. 42C

Fig. 42D

Fig. 42E

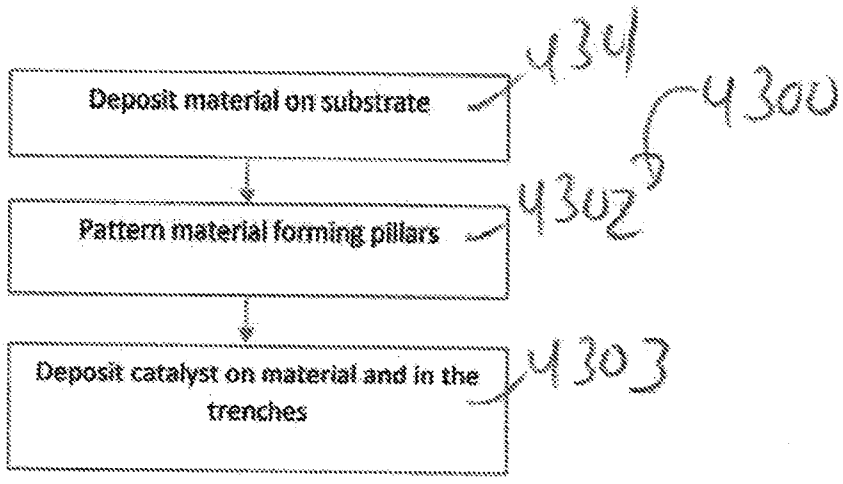
Deposit material on substrate
4304
4300
Pattern material forming pillars
4302
Deposit catalyst on material and in the trenches
4303

Figure 43

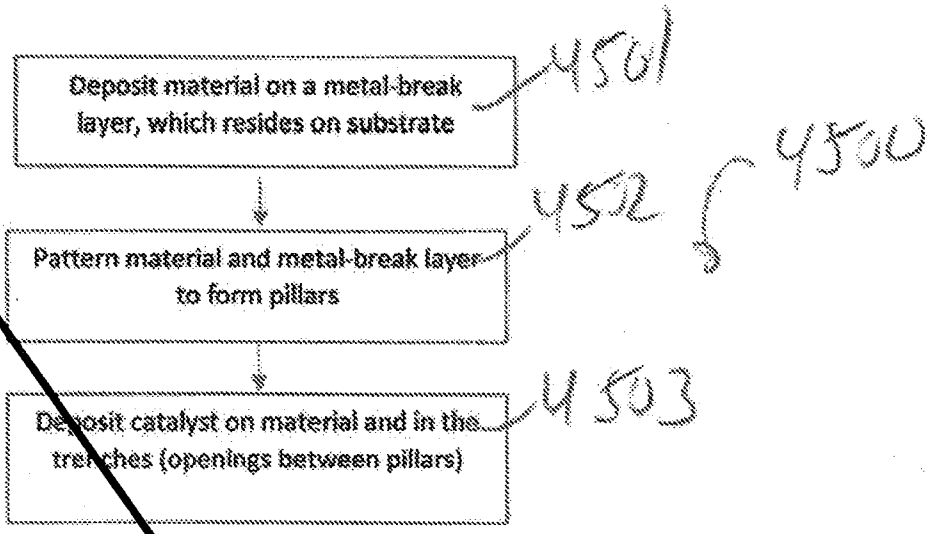
Deposit material on a metal-break layer, which resides on substrate
4501
Pattern material and metal-break layer to form pillars
4502
4500
Deposit catalyst on material and in the trenches (openings between pillars)
4503

Figure 45

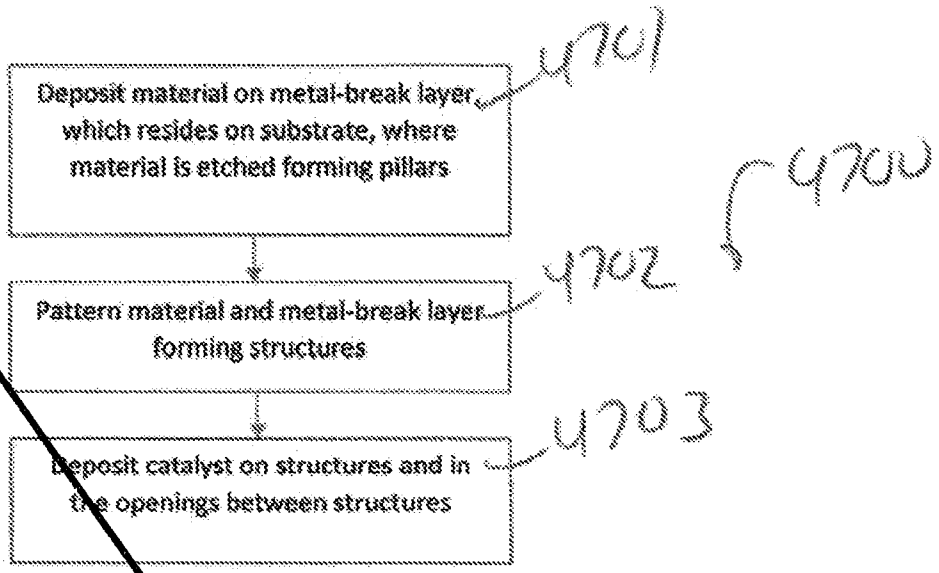
Deposit material on metal-break layer which resides on substrate, where material is etched forming pillars
4701
Pattern material and metal-break layer forming structures
4702
4700
Deposit catalyst on structures and in the openings between structures
4703

Figure 47

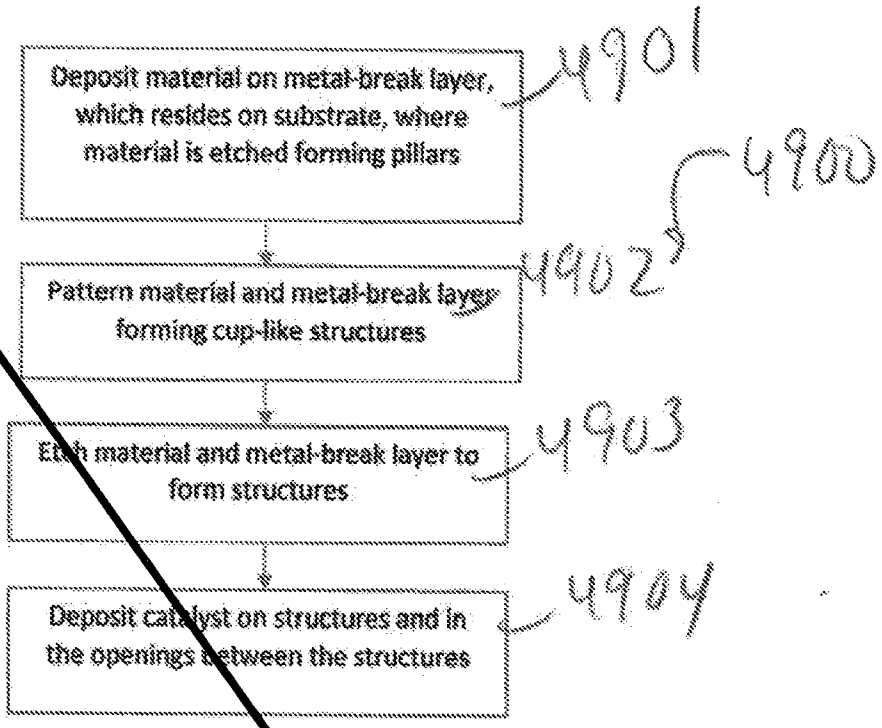
Deposit material on metal-break layer, which resides on substrate, where material is etched forming pillars
4901
4900
Pattern material and metal-break layer forming cup-like structures
4902
Etch material and metal-break layer to form structures
4903
Deposit catalyst on structures and in the openings between the structures
4904

Figure 49

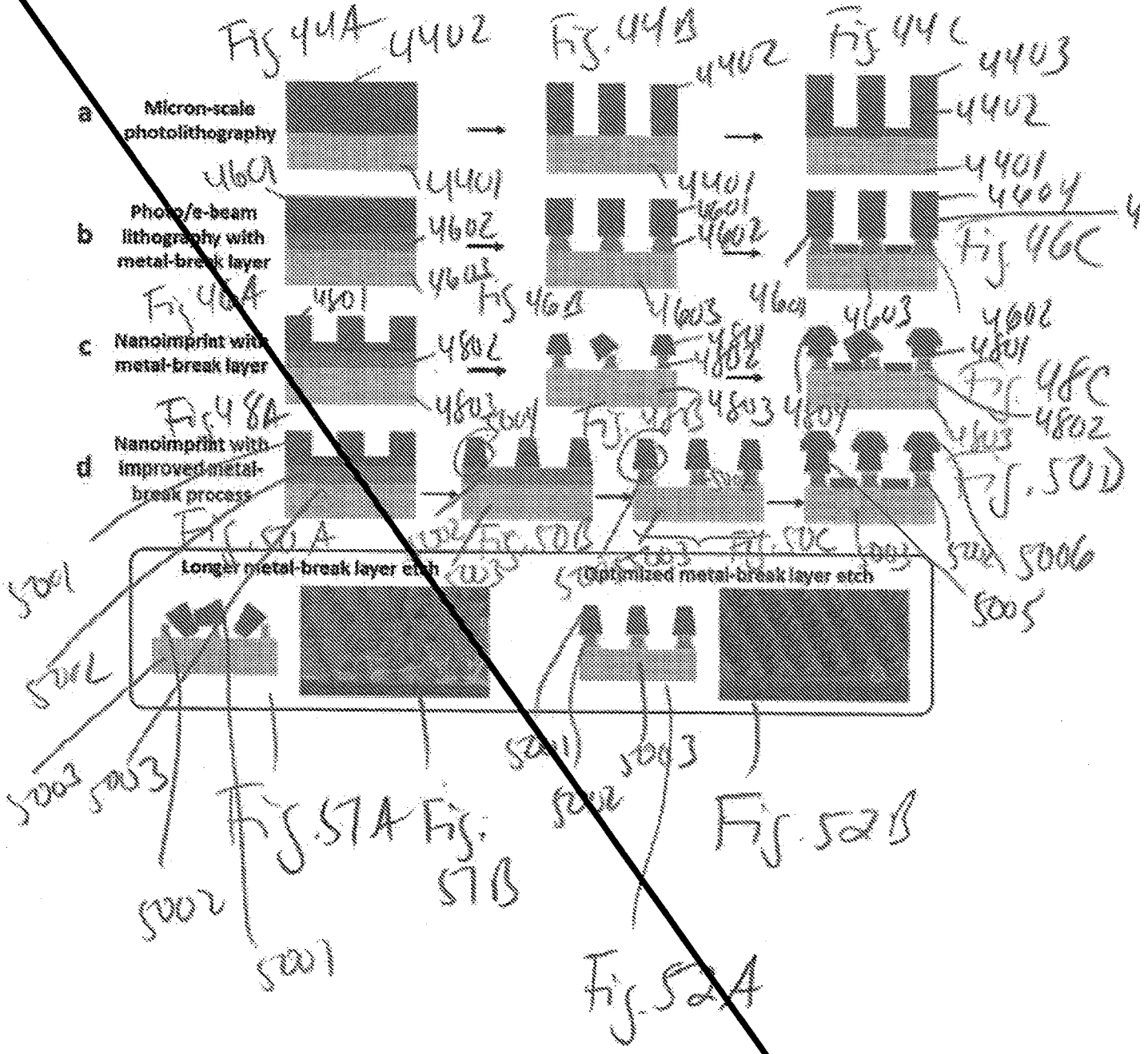
a
Micron-scale photolithography
b
Photo/e-beam lithography with metal-break layer
c
Nanoimprint with metal-break layer
d
Nanoimprint with improved metal-break process
Longer metal-break layer etch
Optimized metal-break layer etch
Fig 44A
Fig. 44B
Fig 44C
Fig 46A
Fig 46B
Fig 46C
Fig 48A
Fig 48C
Fig. 50A
Fig. 50B
Fig. 50C
Fig. 50D
Fig. 51A
Fig. 51B
Fig. 52A
Fig. 52B
4401
4402
4403
4601
4602
4603
4604
4801
4802
4803
4804
5001
5002
5003
5004
5005
5006

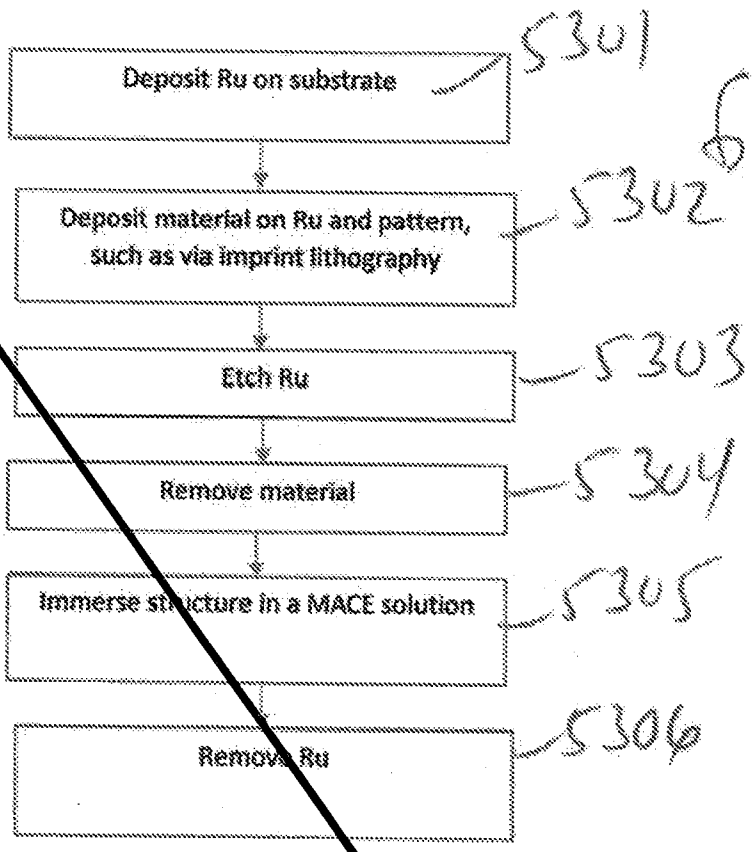
Deposit Ru on substrate
5301
5300
Deposit material on Ru and pattern, such as via imprint lithography
5302
Etch Ru
5303
Remove material
5304
Immerse structure in a MACE solution
5305
Remove Ru
5306

Figure 53

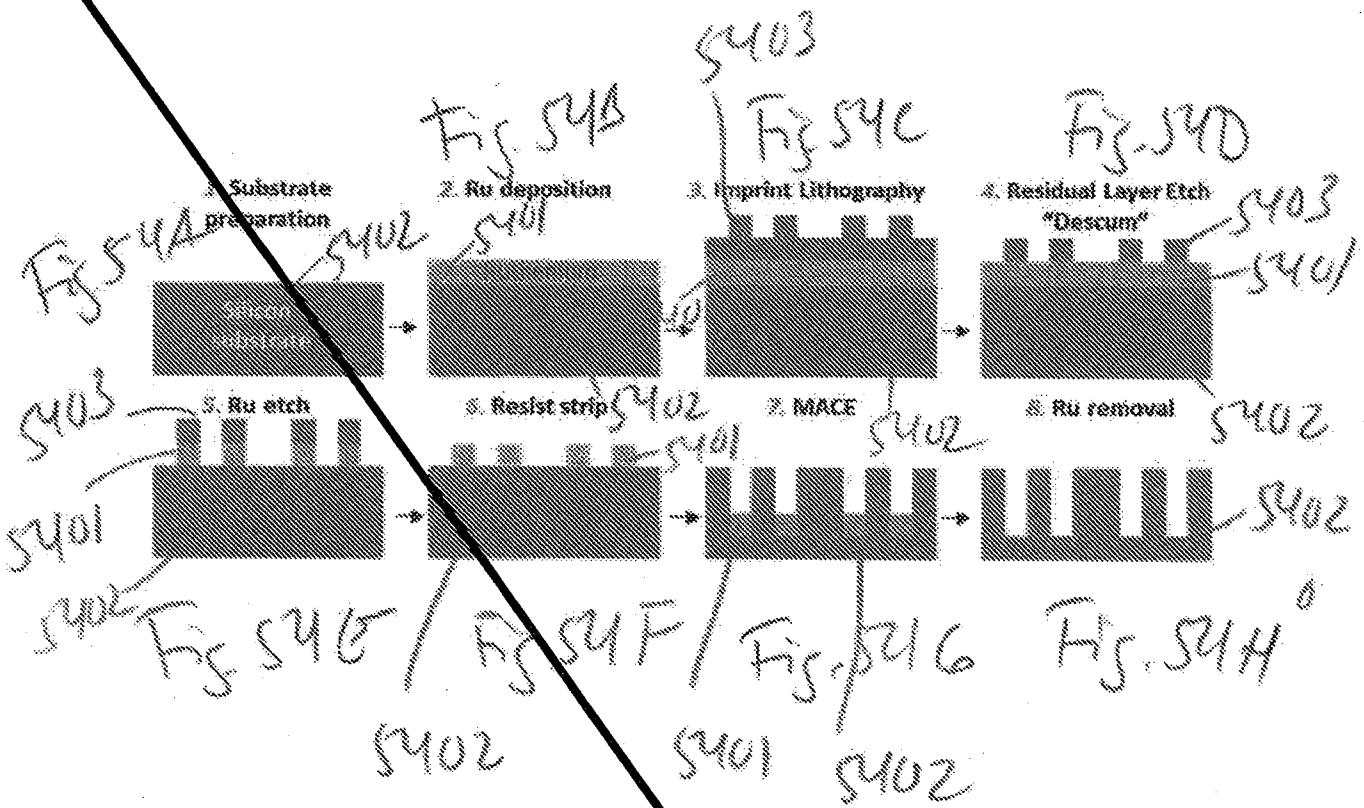
1. Substrate preparation
2. Ru deposition
3. Imprint Lithography
4. Residual Layer Etch "Descum"
5. Ru etch
6. Resist strip
7. MACE
8. Ru removal

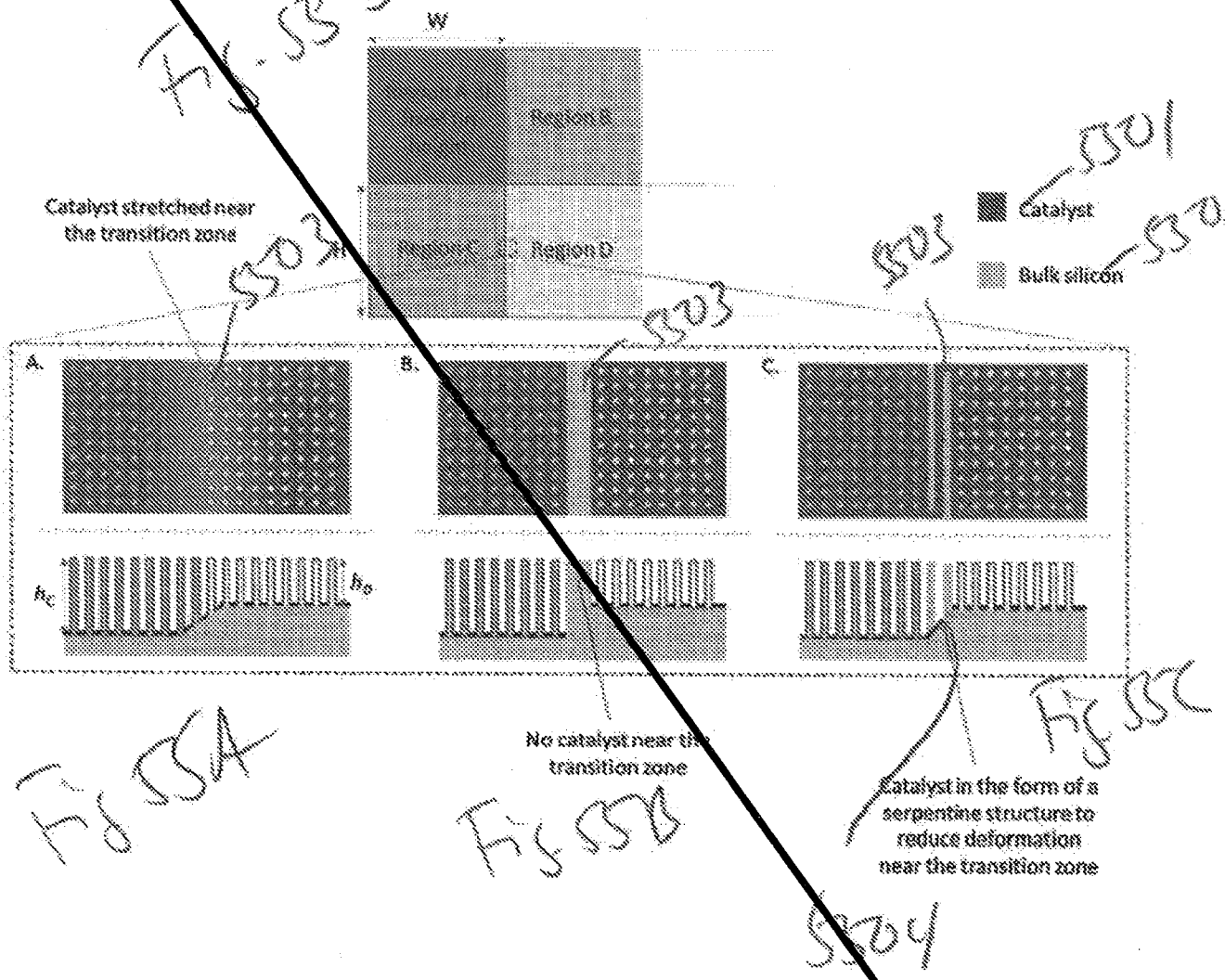

Fig. 5A

Fig. 5B

Fig. 5C

Fig. 5D

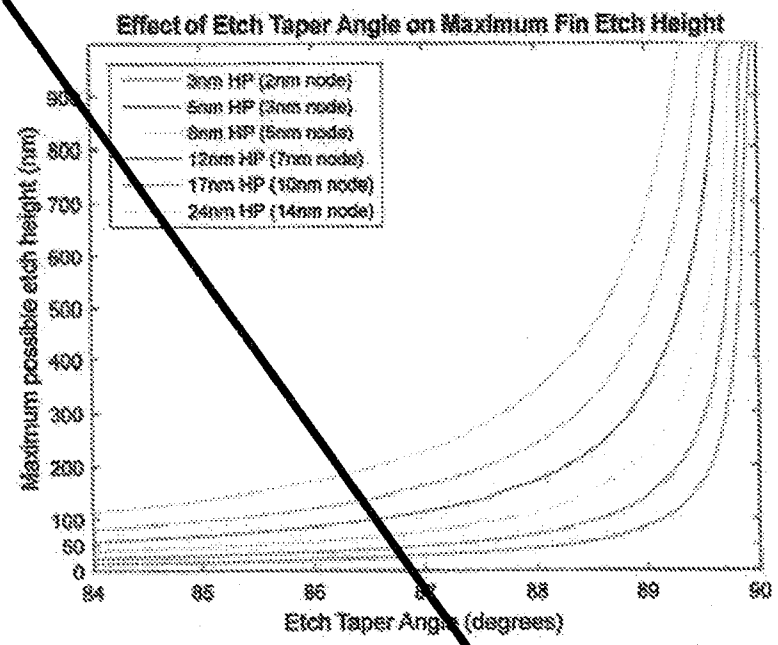

FIG 5600

Figure 56

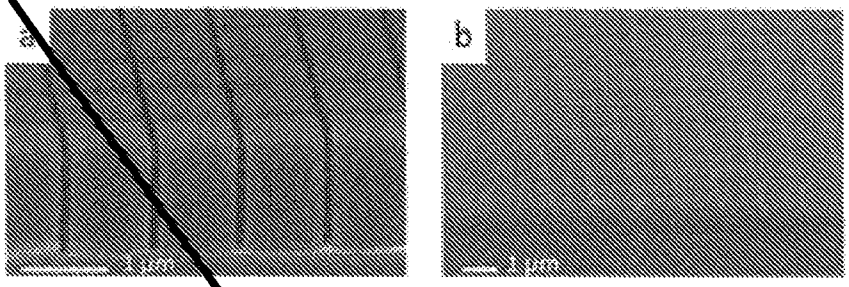

Fig 57A Fig. 57B

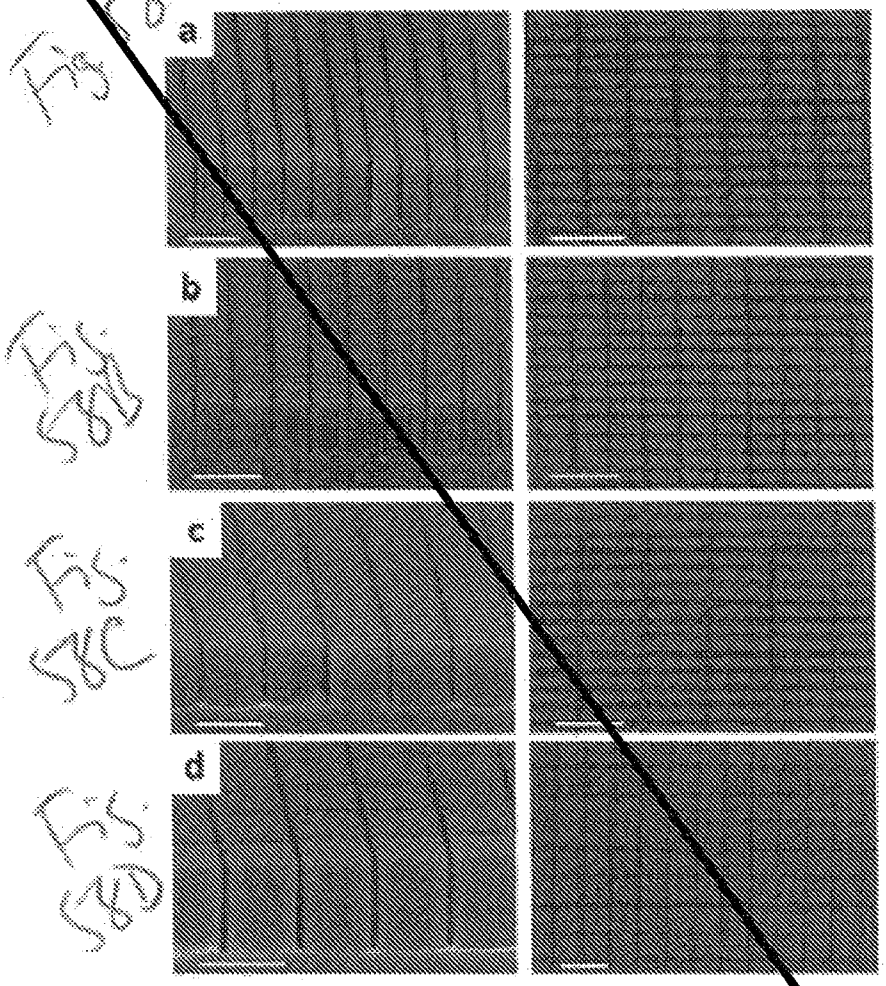
a
b
c
d

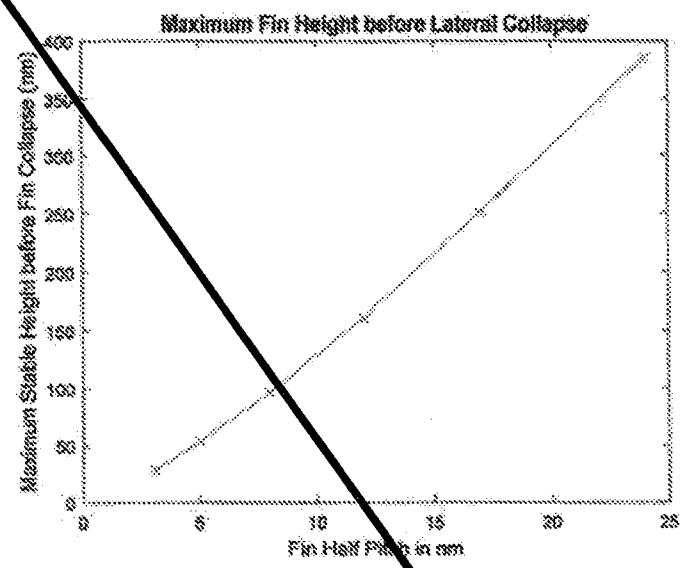
Maximum Fin Height before Lateral Collapse
Maximum Stable Height before Fin Collapse (mm)
0
5
10
15
20
25
Fin Half Pitch in mm

Figure 59

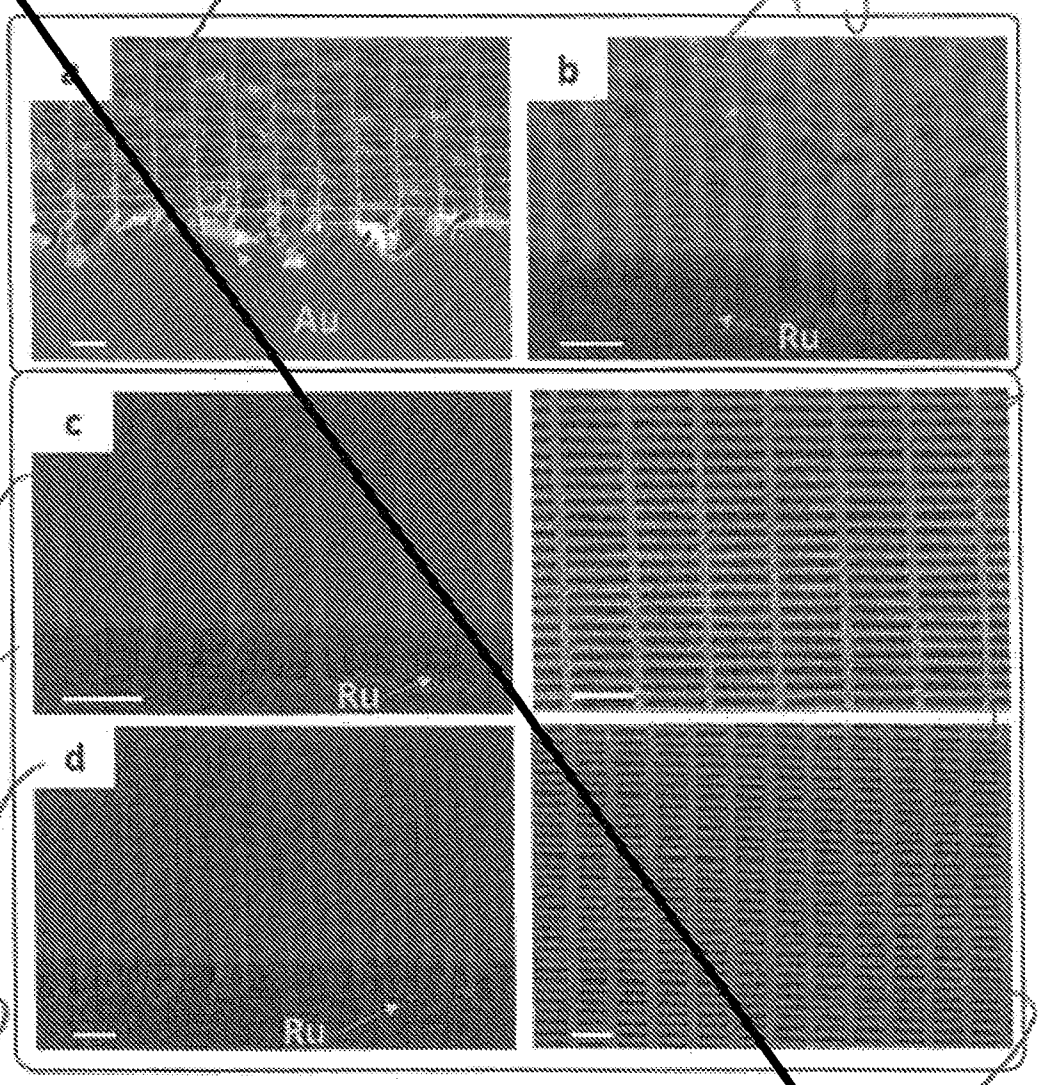
a
Au
b
Ru
c
Ru
d
Ru

Fig. 61A

Fig. 61B

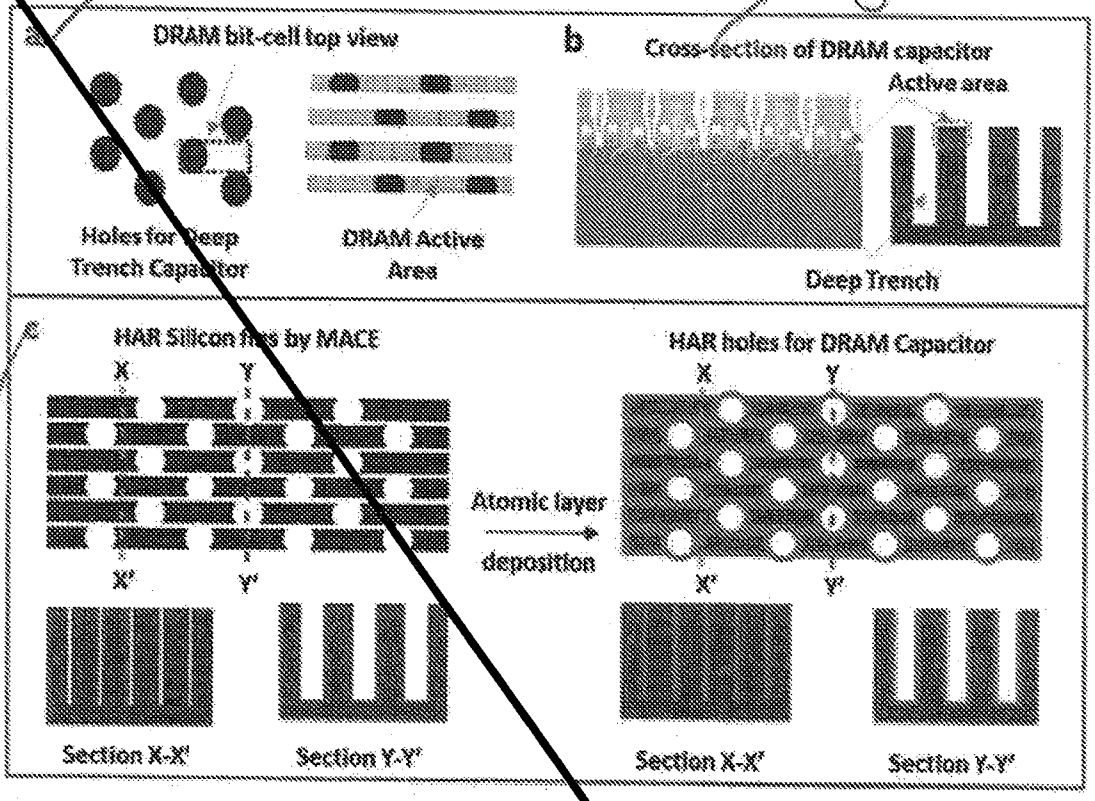

Fig. 61C

Fig. 62A

Fig. 62B

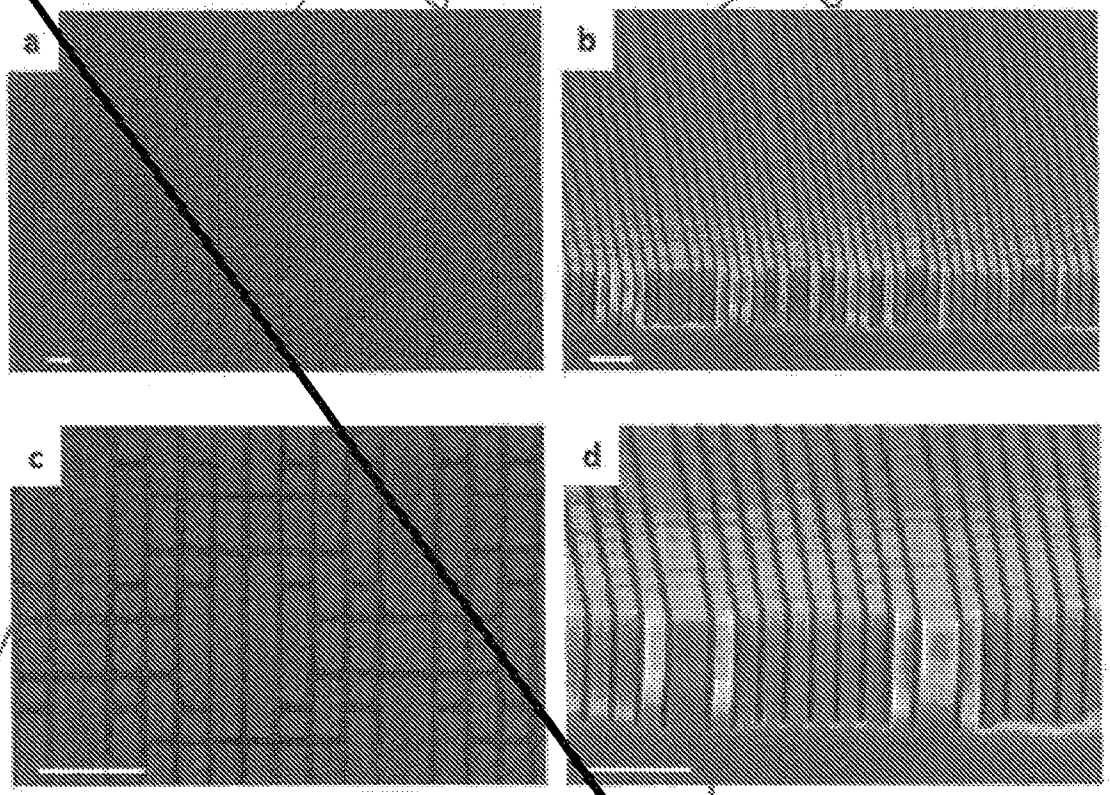

Fig. 62C

Fig. 62D

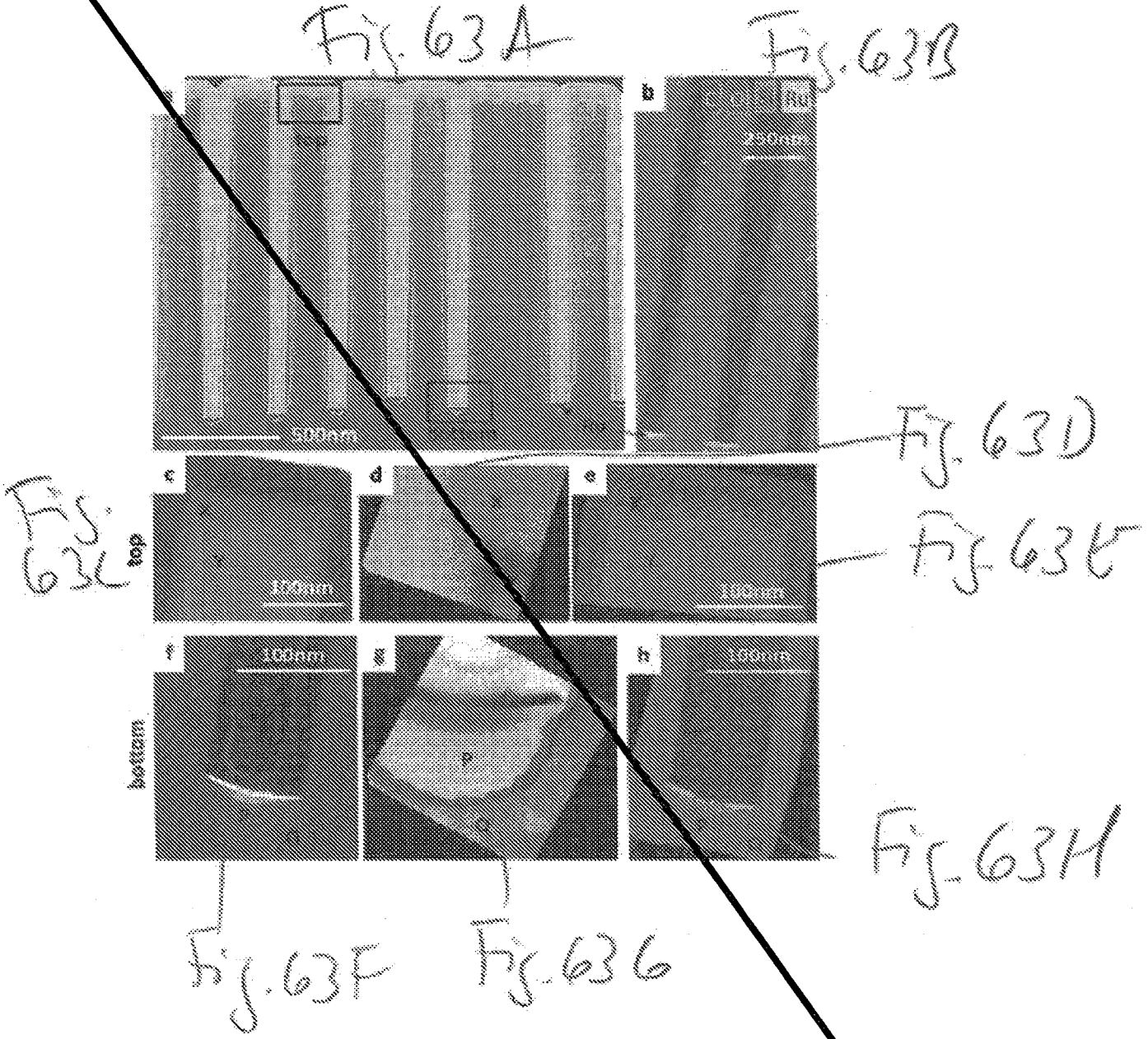
Fig. 63A
Fig. 63B
Fig. 63D
Fig. 63L
top
Fig. 63E
bottom
Fig. 63H
Fig. 63F
Fig. 63G

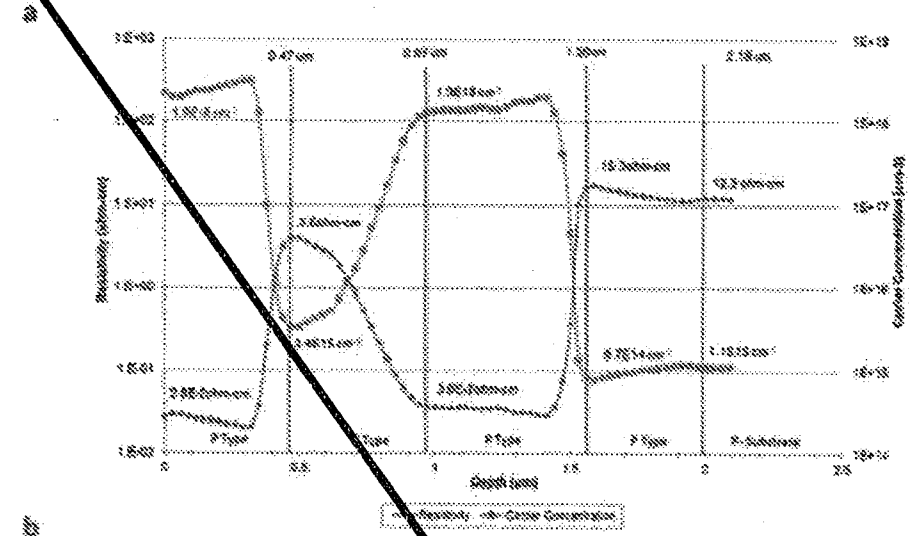

Fig. 64A

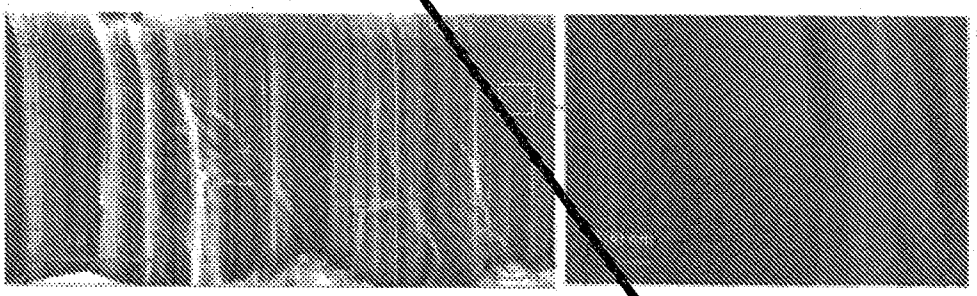

Fig. 64B

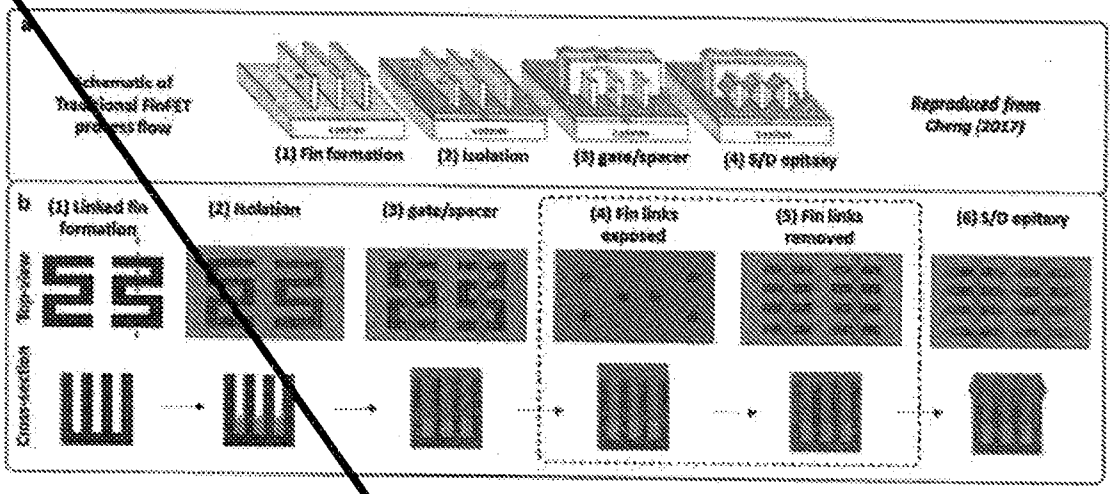

Fig. 65A

Fig. 65B

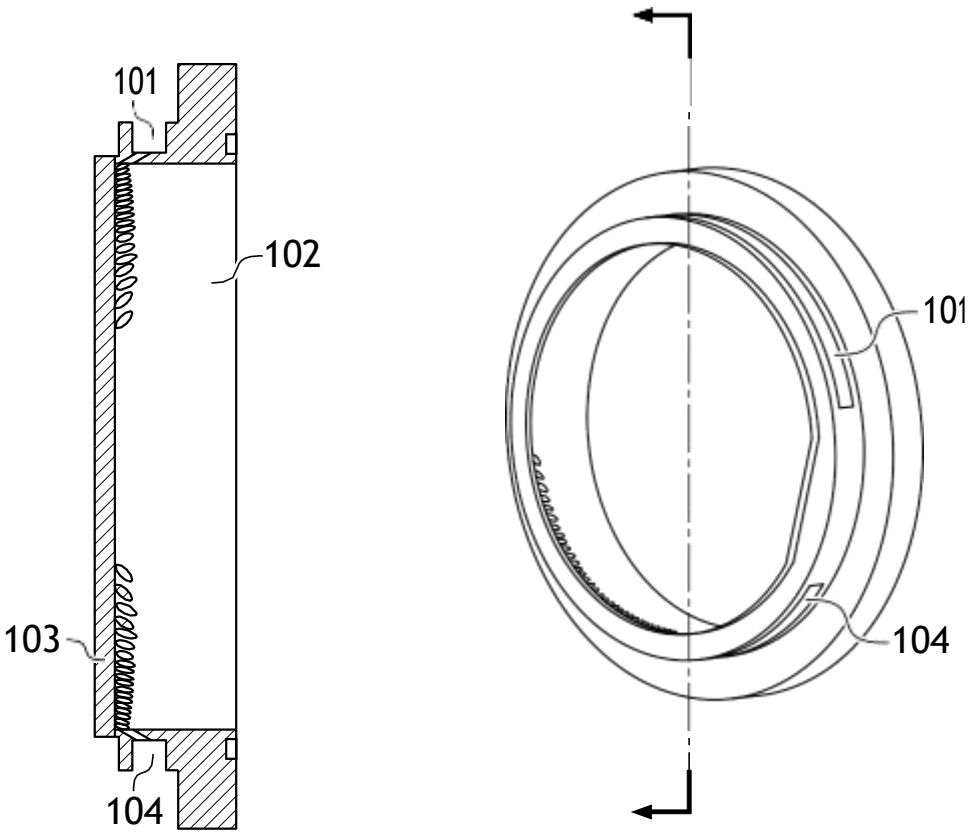

FIG. 1

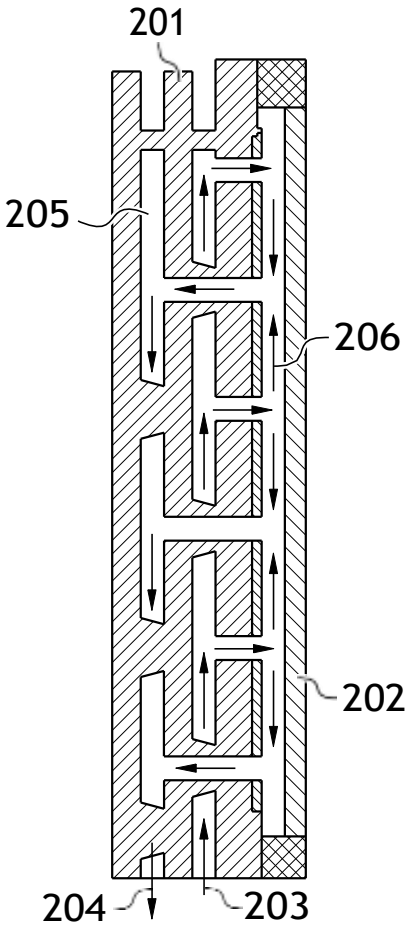

FIG. 2

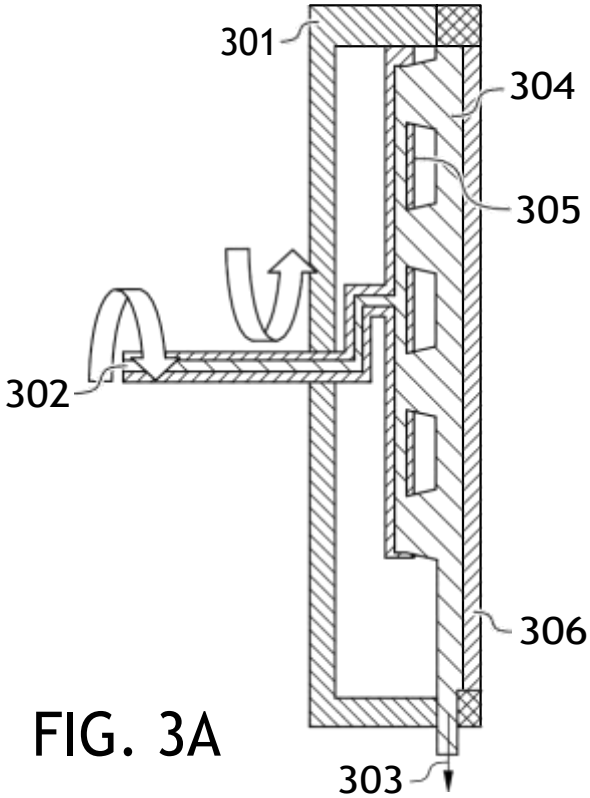

FIG. 3A

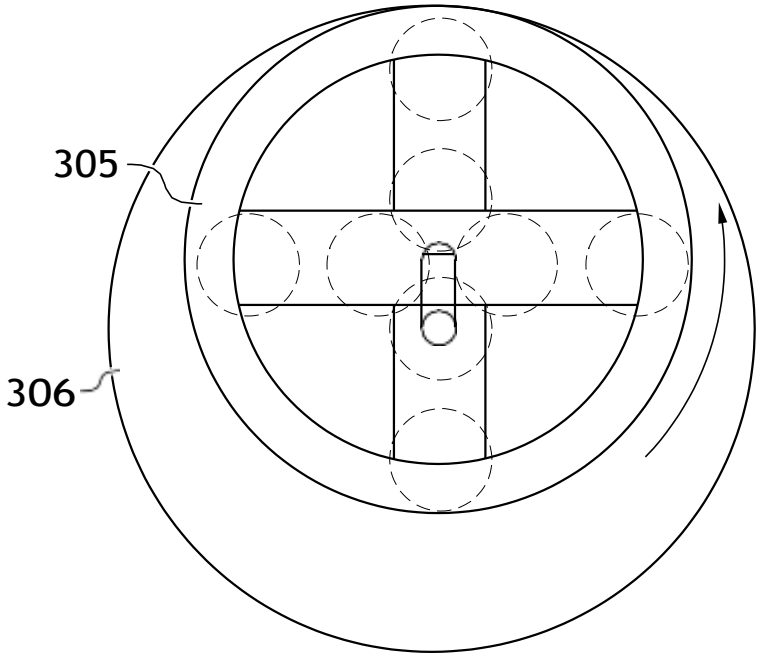

FIG. 3B

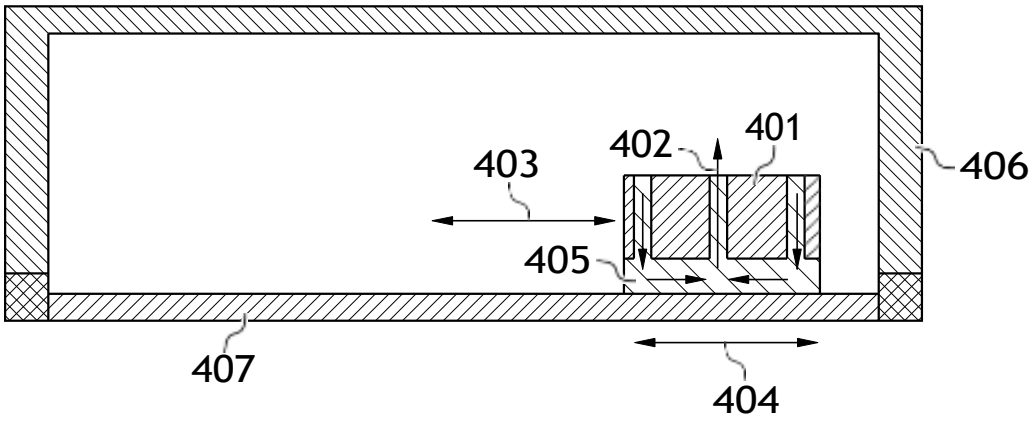

FIG. 4

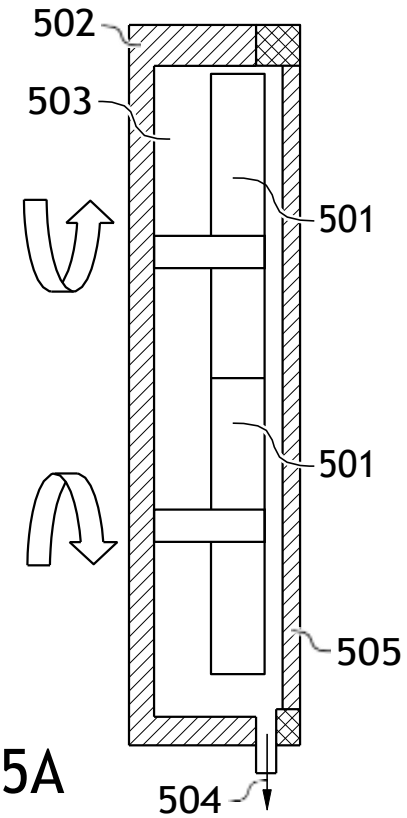

FIG. 5A

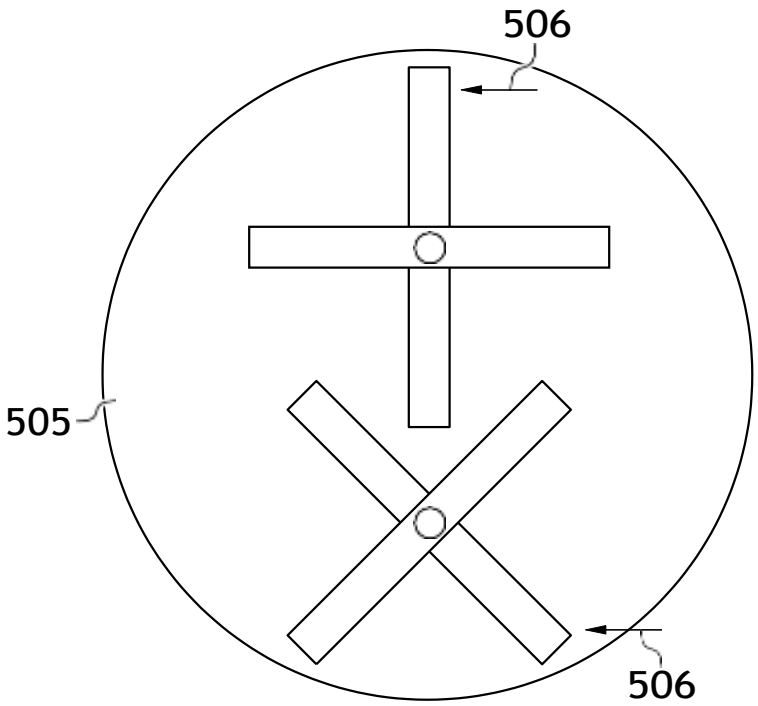

FIG. 5B

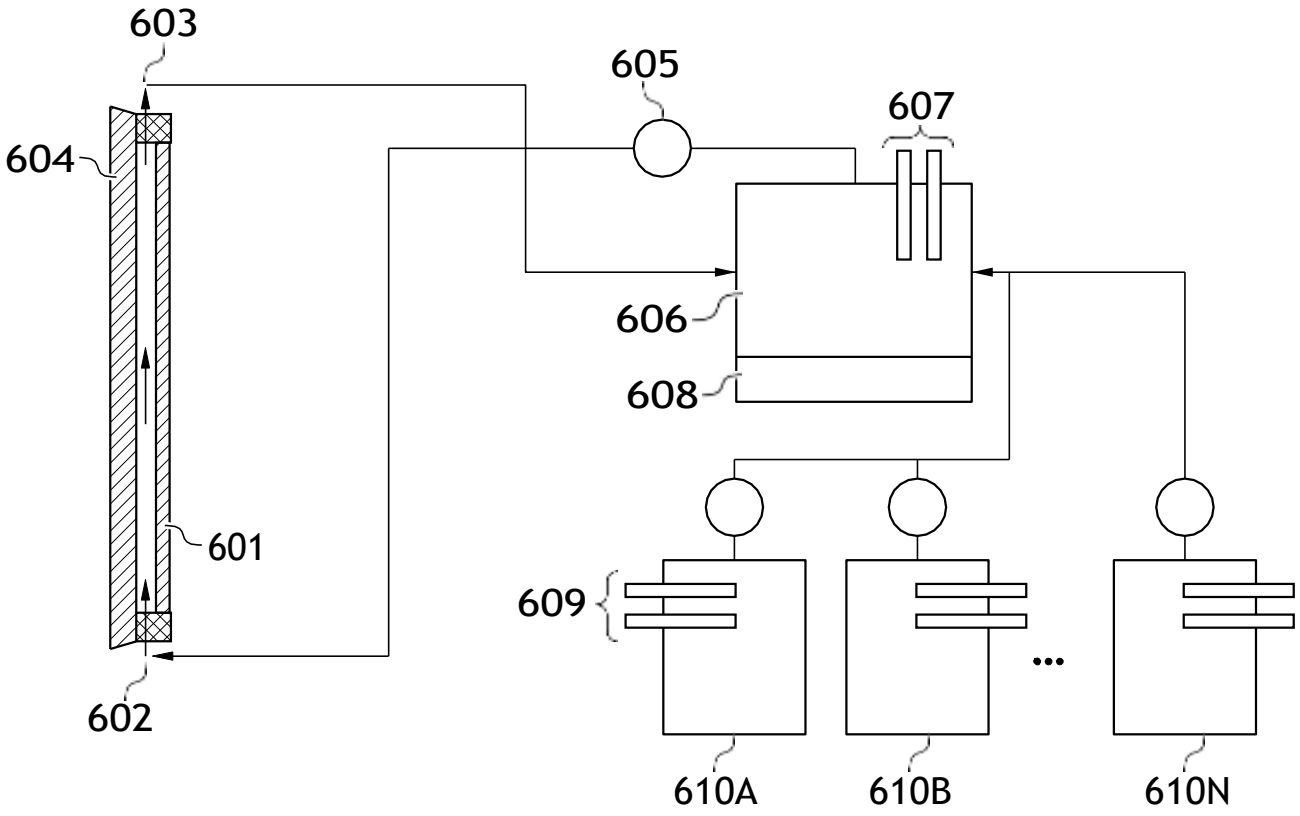

FIG. 6

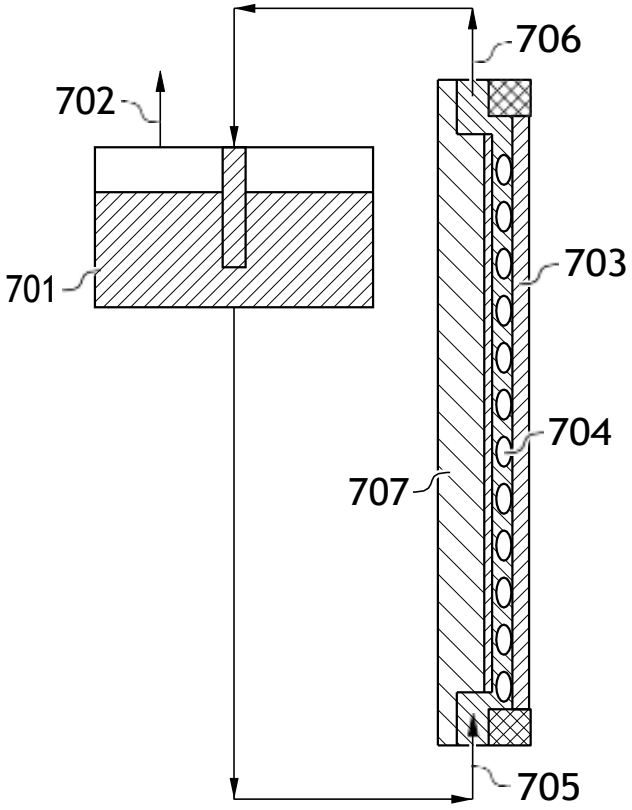

FIG. 7

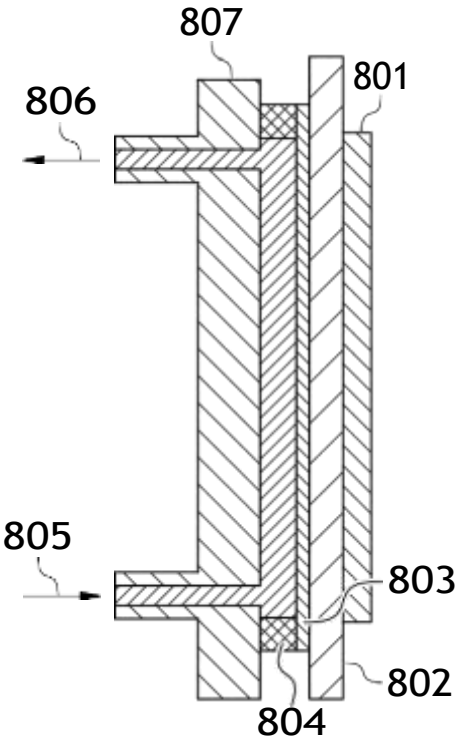

FIG. 8A

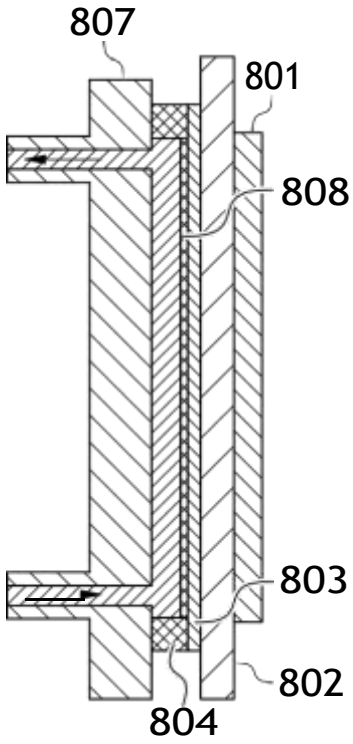

FIG. 8B

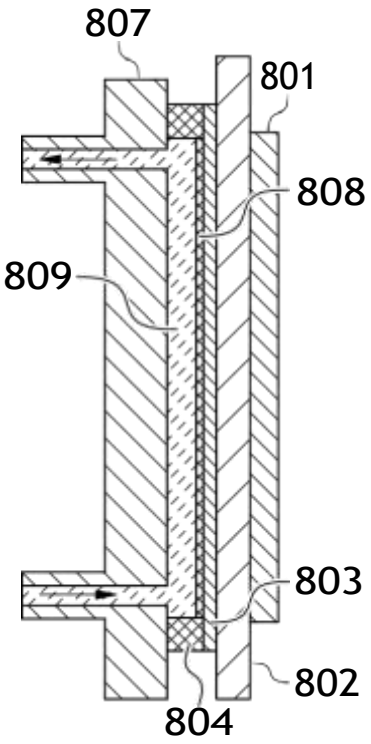

FIG. 8C

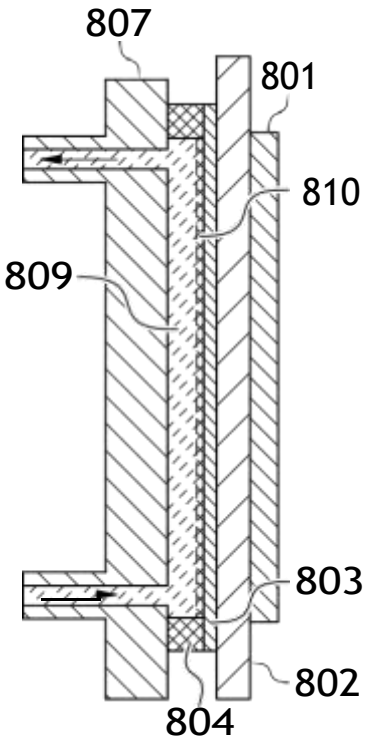

FIG. 8D

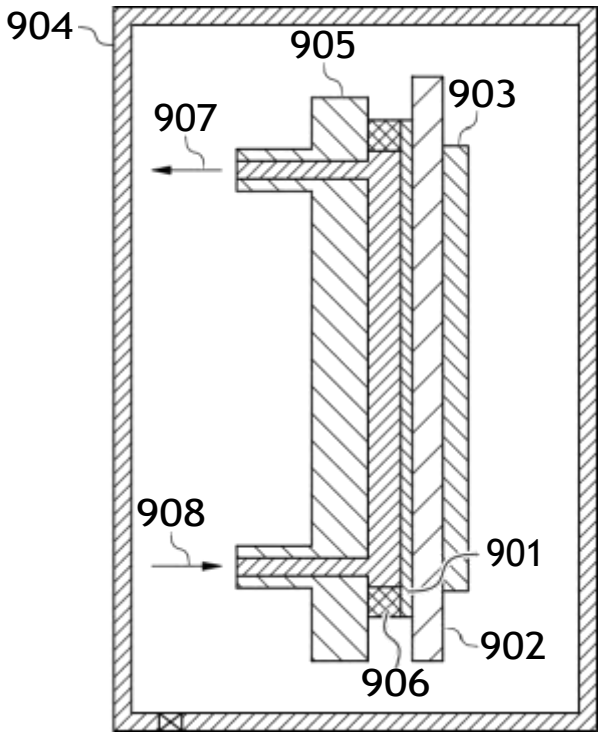

FIG. 9A

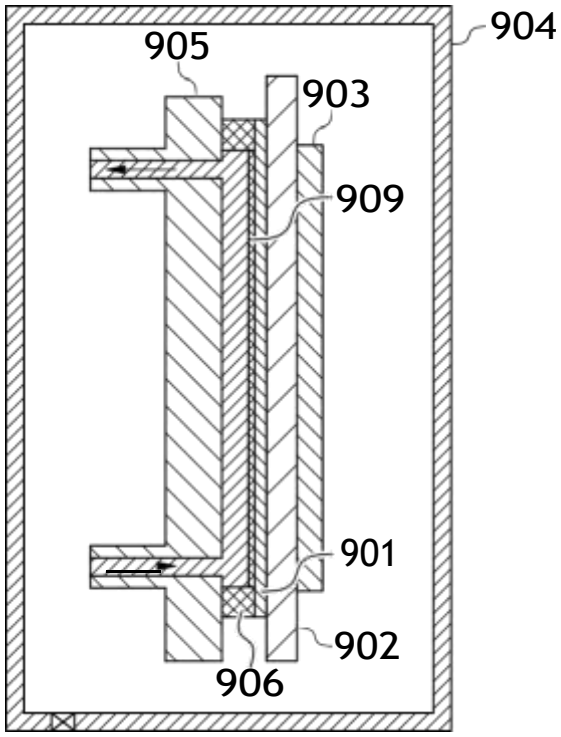

FIG. 9B

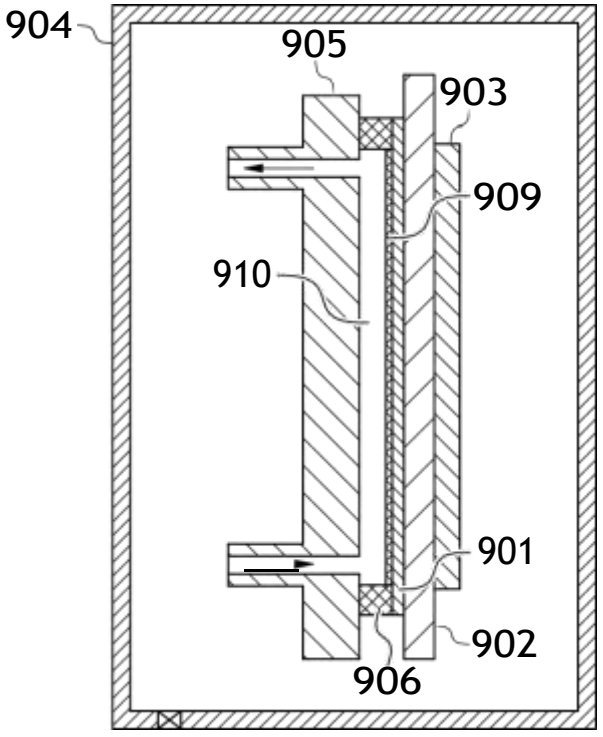

FIG. 9C

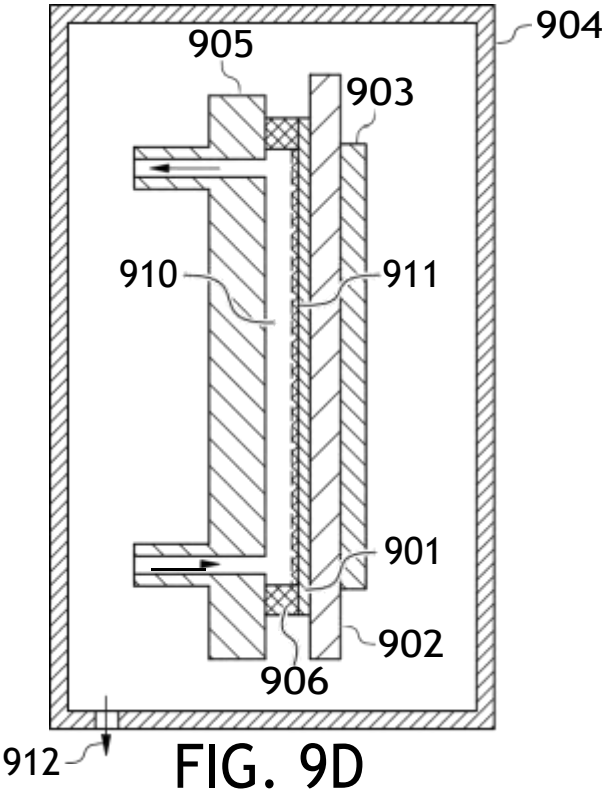

FIG. 9D

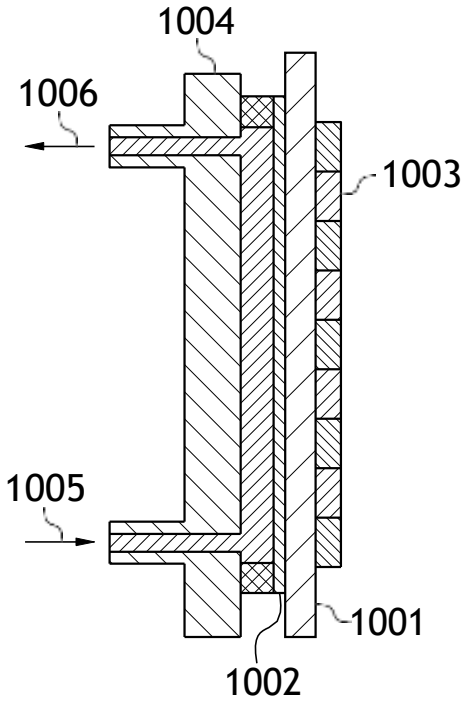

FIG. 10

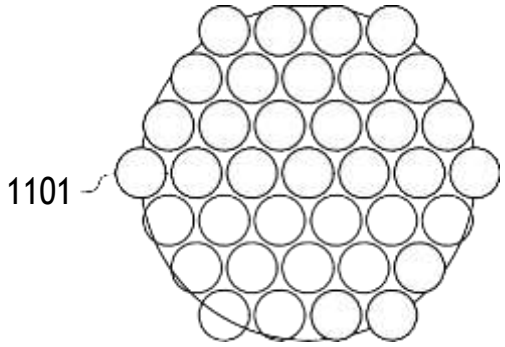

FIG. 11A

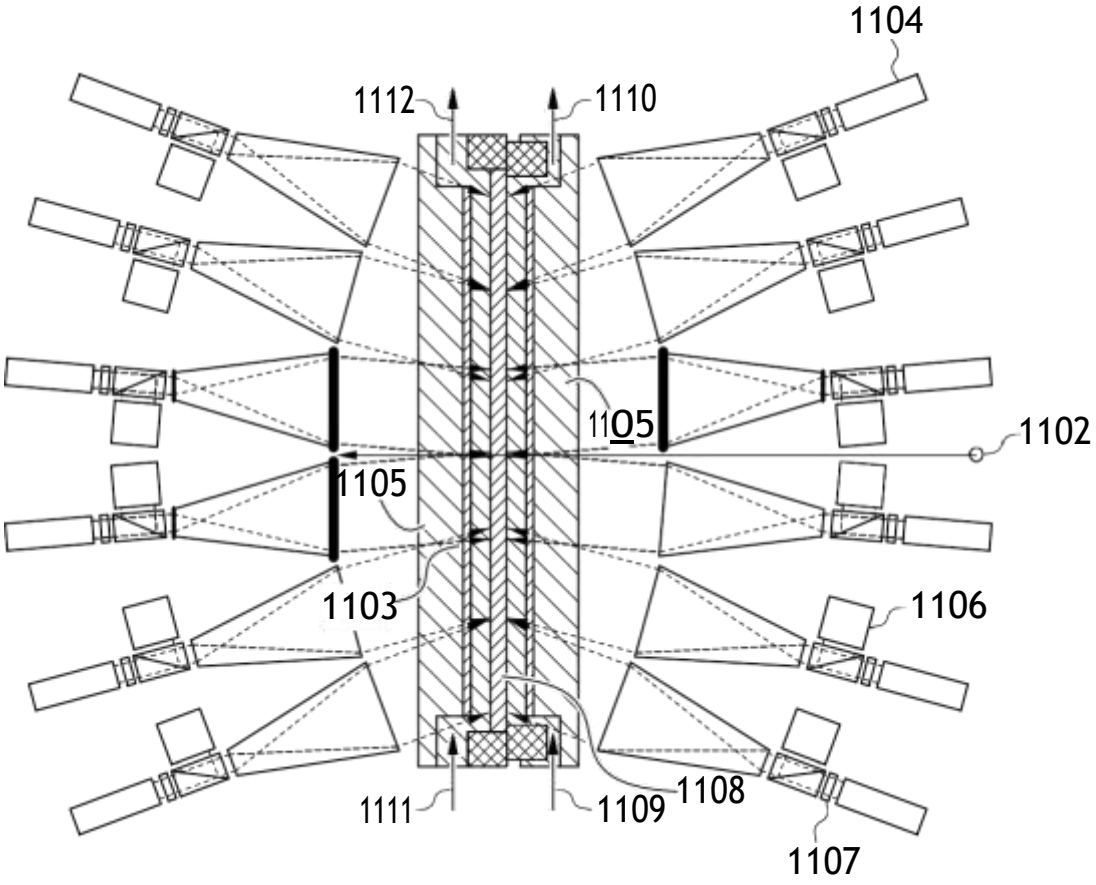

FIG. 11B

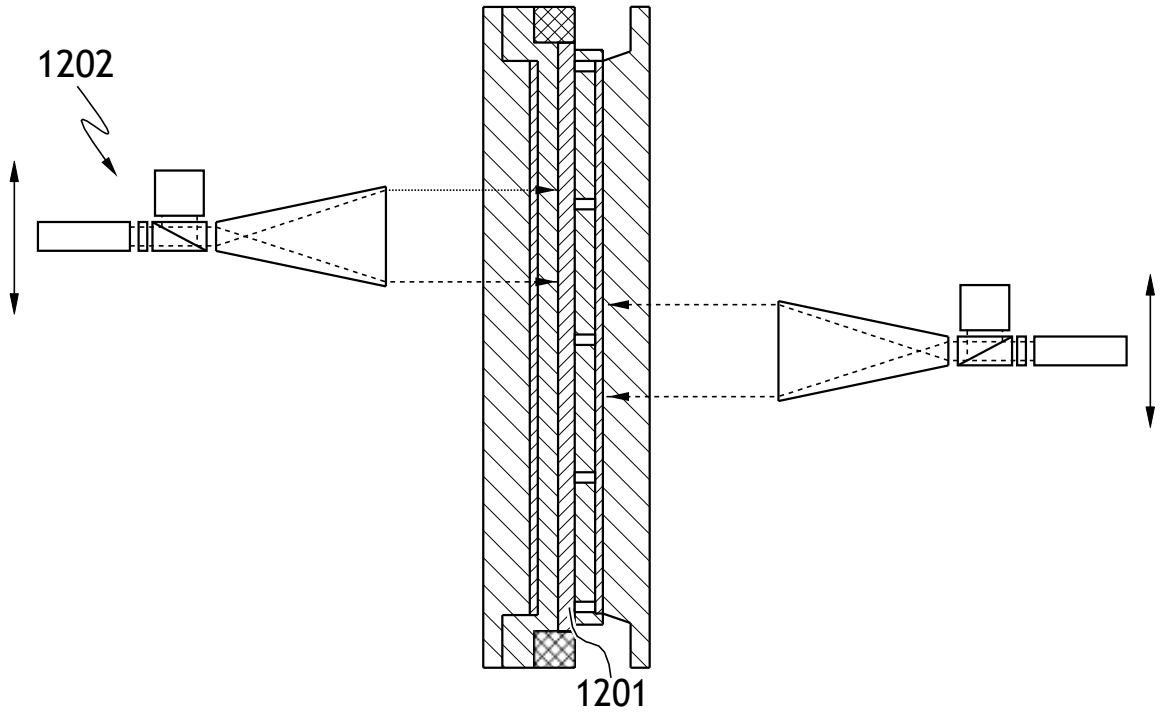

FIG. 12

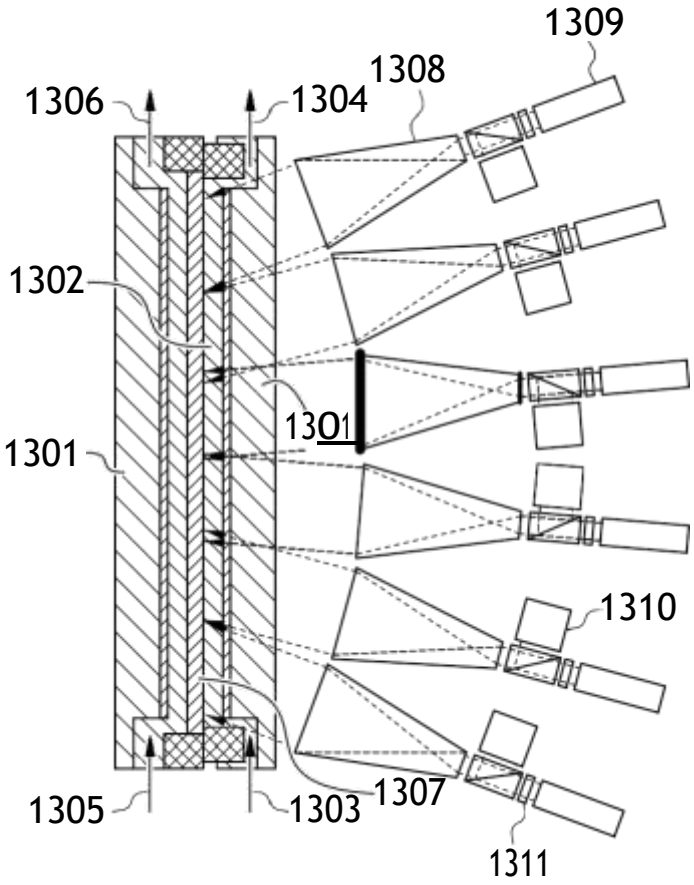

FIG. 13

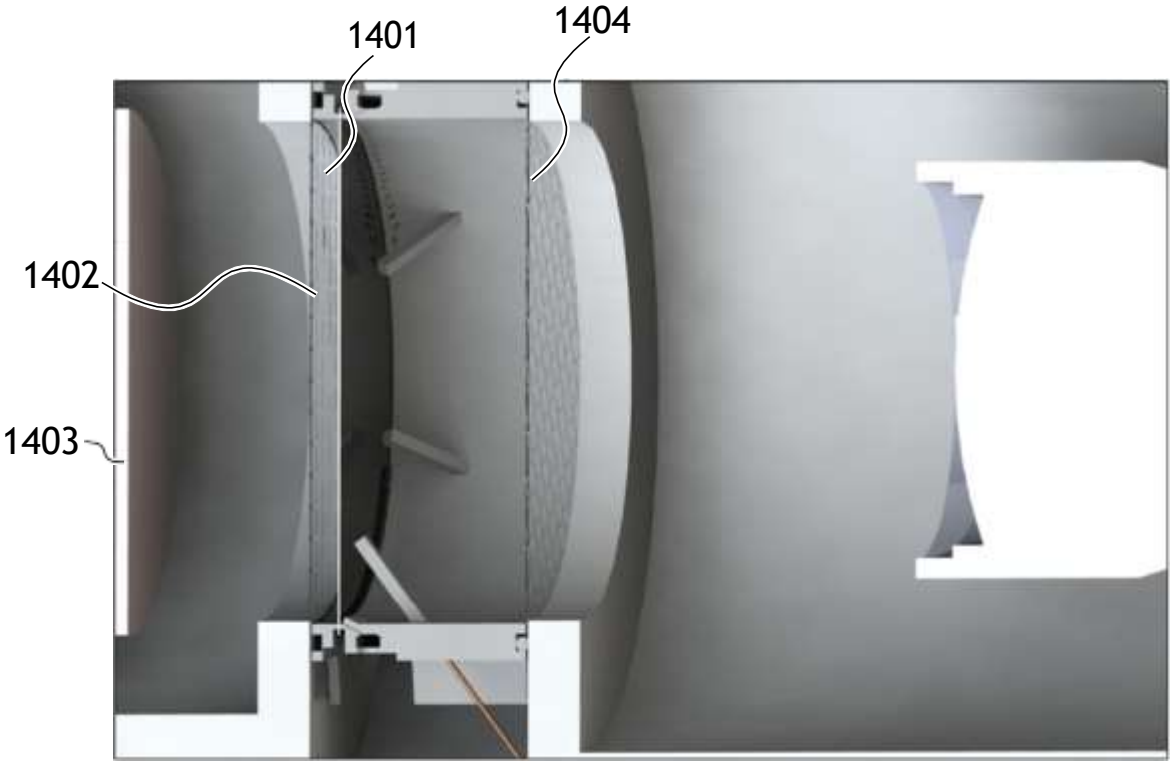

FIG. 14

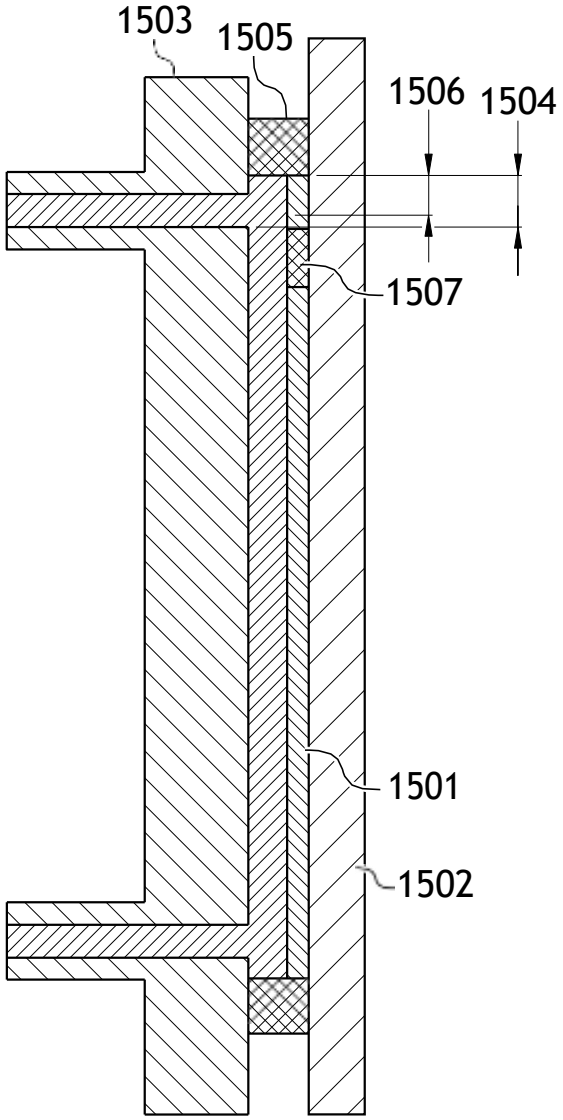

FIG. 15

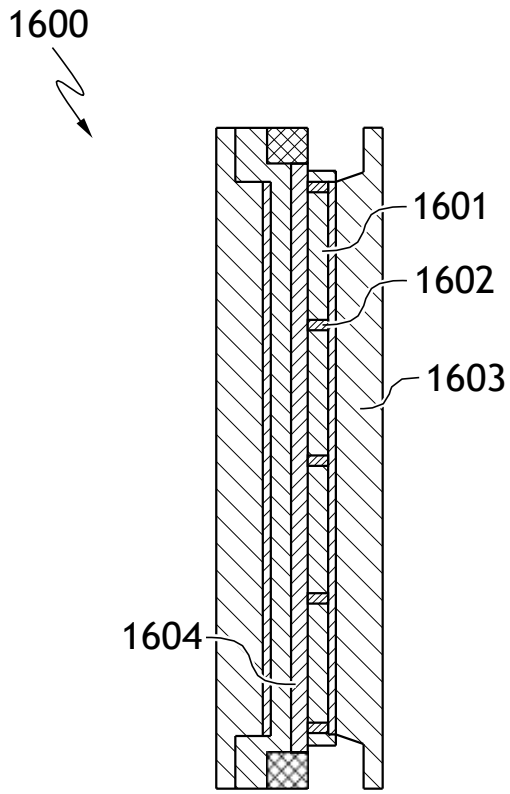

FIG. 16

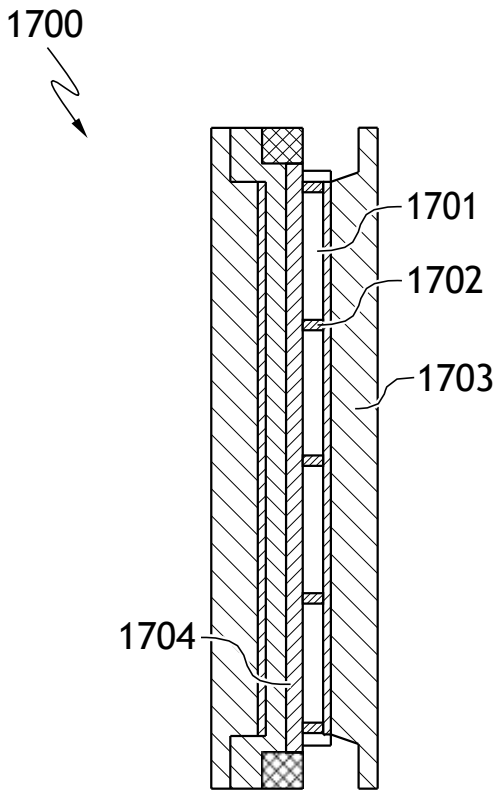

FIG. 17

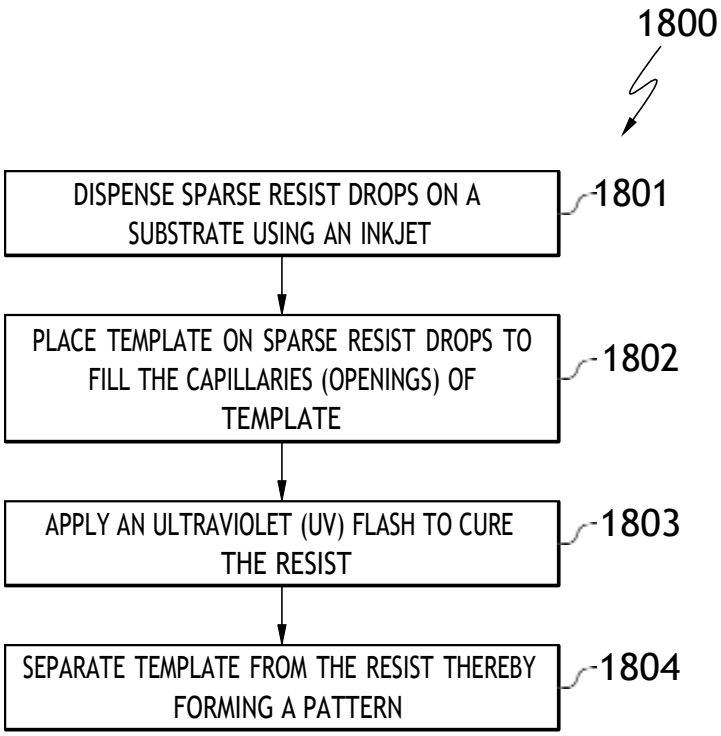
1800
DISPENSE SPARSE RESIST DROPS ON A SUBSTRATE USING AN INKJET
1801
PLACE TEMPLATE ON SPARSE RESIST DROPS TO FILL THE CAPILLARIES (OPENINGS) OF TEMPLATE
1802
APPLY AN ULTRAVIOLET (UV) FLASH TO CURE THE RESIST
1803
SEPARATE TEMPLATE FROM THE RESIST THEREBY FORMING A PATTERN
1804

FIG. 18

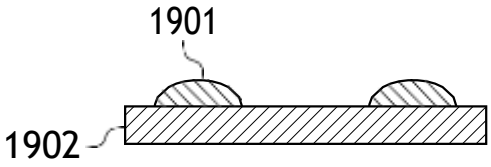

FIG. 19A

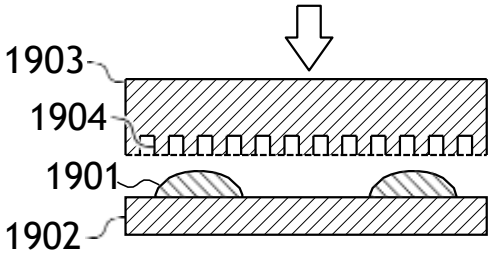

FIG. 19B

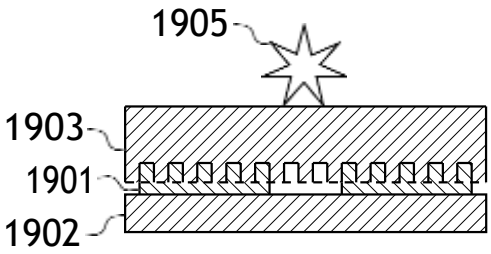

FIG. 19C

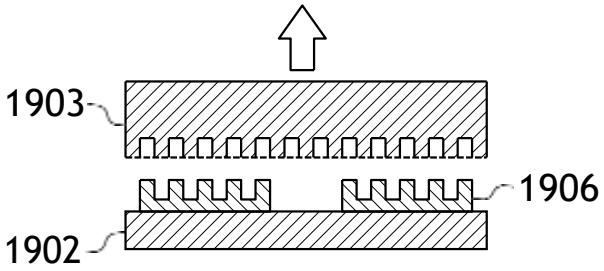

FIG. 19D

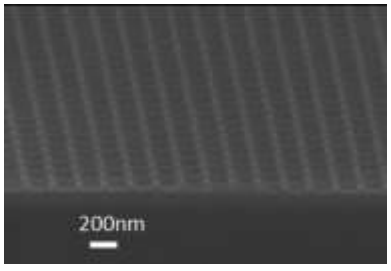

FIG. 20A

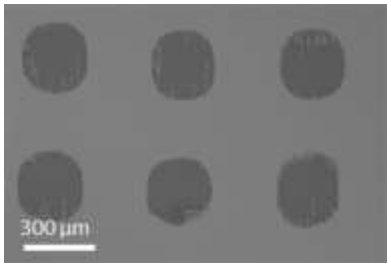

FIG. 20B

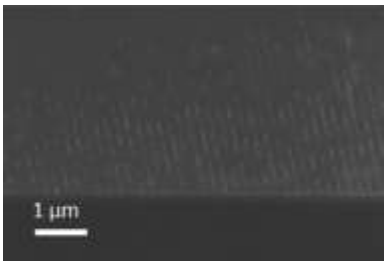

FIG. 20C

ARGON/O_2

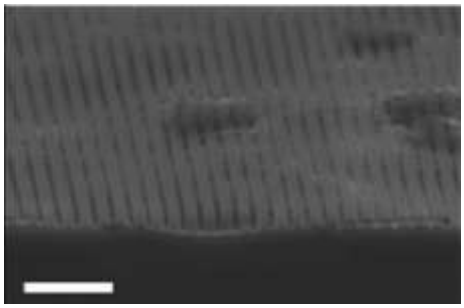

FIG. 21A

ARGON

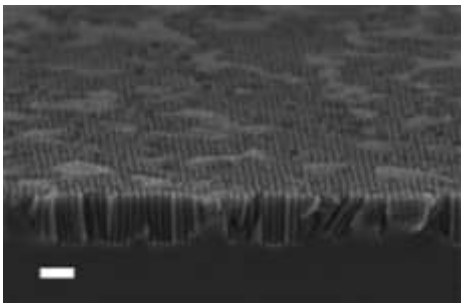

FIG. 21B

ARGON/H_2

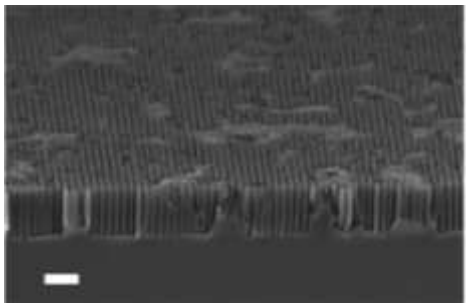

FIG. 21C

ARGON/CF_4

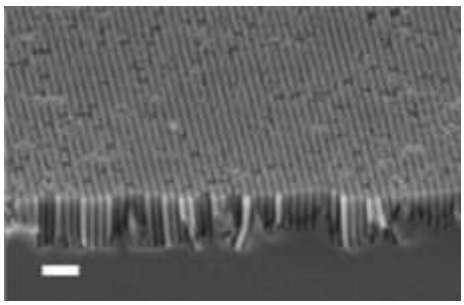

FIG. 21D

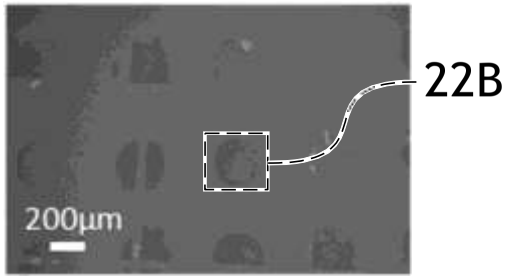

FIG. 22A

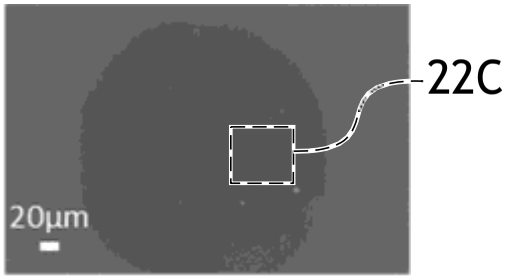

FIG. 22B

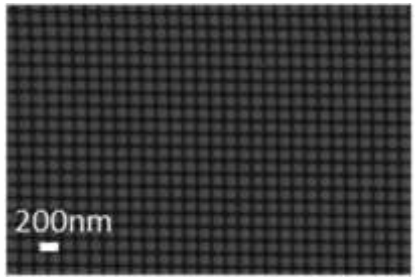

FIG. 22C

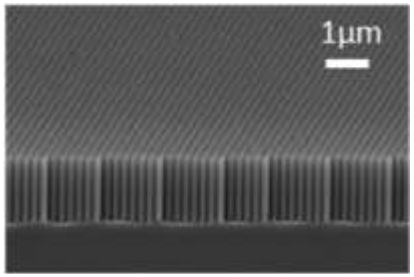

FIG. 22D

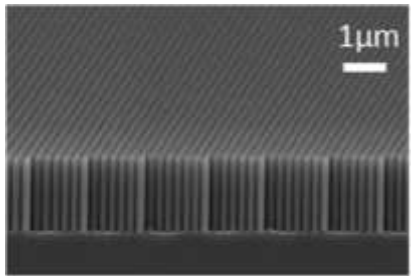

FIG. 22E

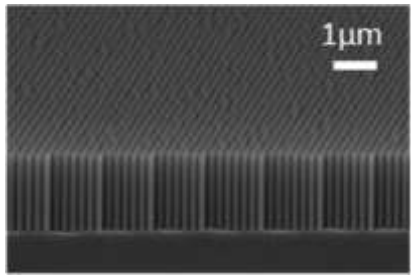

FIG. 22F

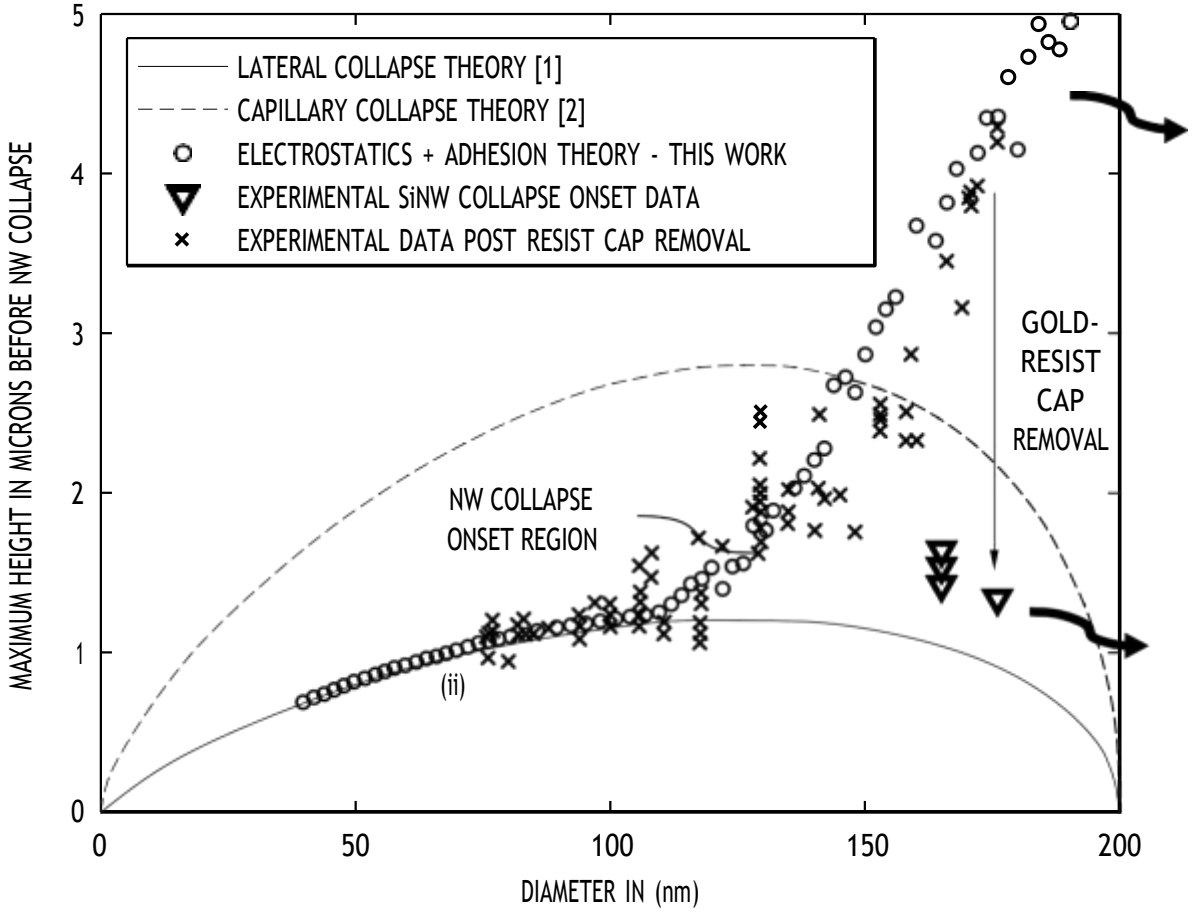

FIG. 23A

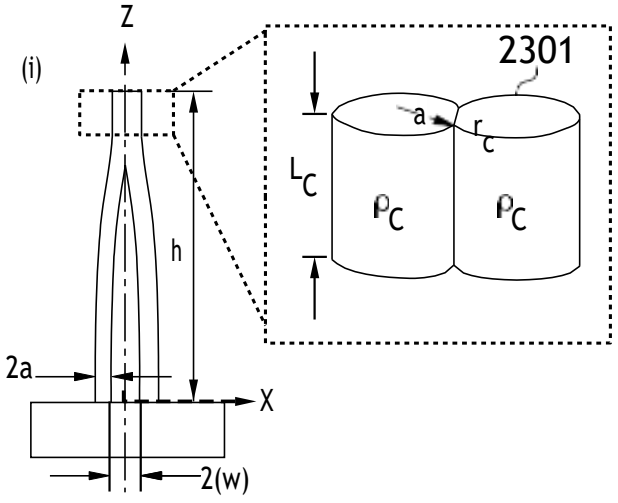

FIG. 23B



FIG. 23C

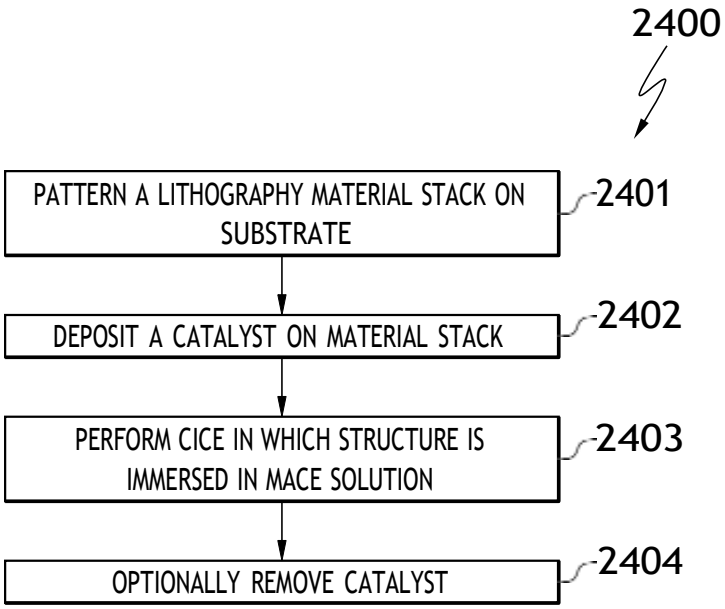
2400
PATTERN A LITHOGRAPHY MATERIAL STACK ON SUBSTRATE
2401
DEPOSIT A CATALYST ON MATERIAL STACK
2402
PERFORM CICE IN WHICH STRUCTURE IS IMMERSED IN MACE SOLUTION
2403
OPTIONALLY REMOVE CATALYST
2404

FIG. 24

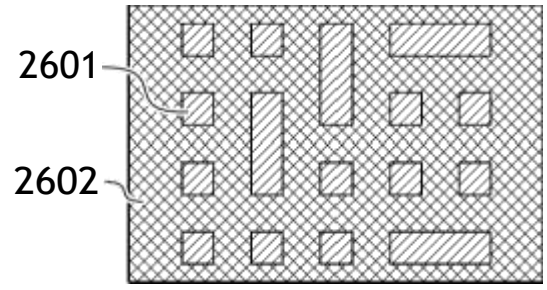

FIG. 25A

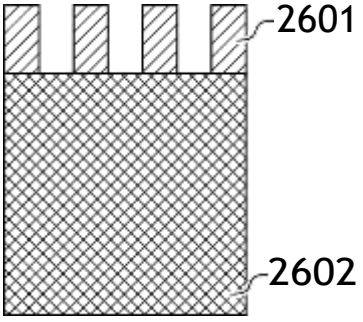

FIG. 26A

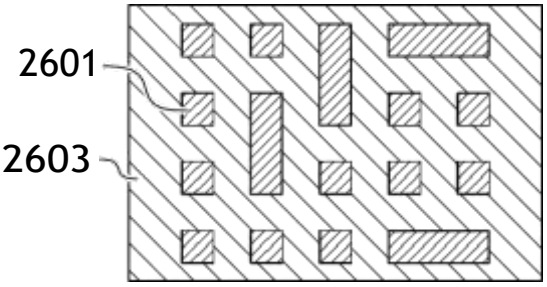

FIG. 25B

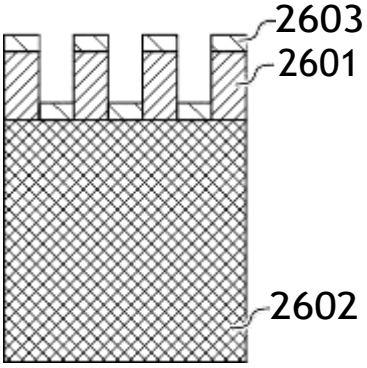

FIG. 26B

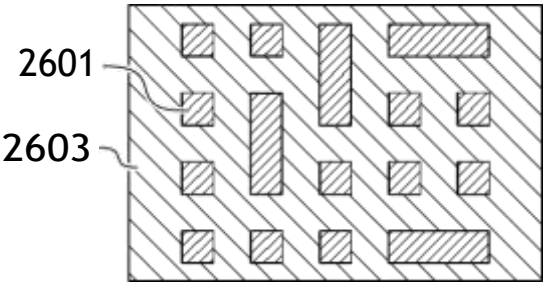

FIG. 25C

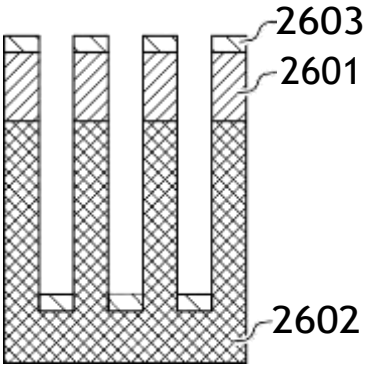

FIG. 26C

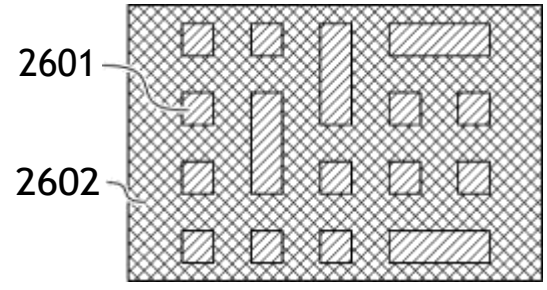

FIG. 25D

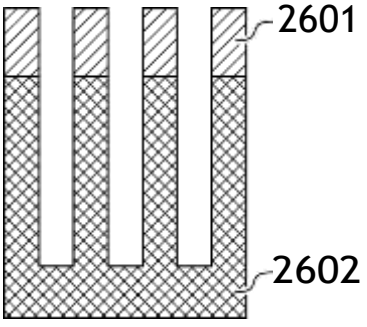

FIG. 26D

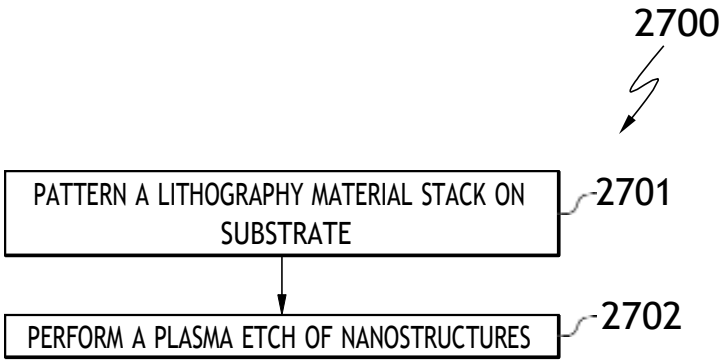
2700
PATTERN A LITHOGRAPHY MATERIAL STACK ON SUBSTRATE
2701
PERFORM A PLASMA ETCH OF NANOSTRUCTURES
2702

FIG. 27

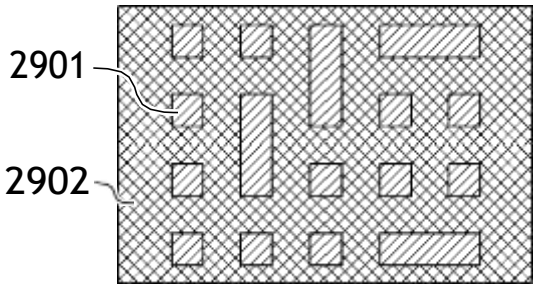

FIG. 28A

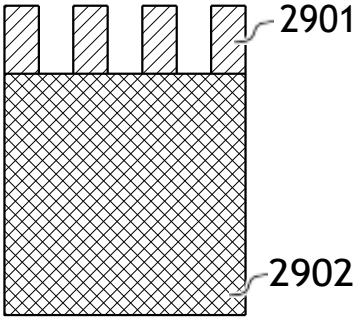

FIG. 29A

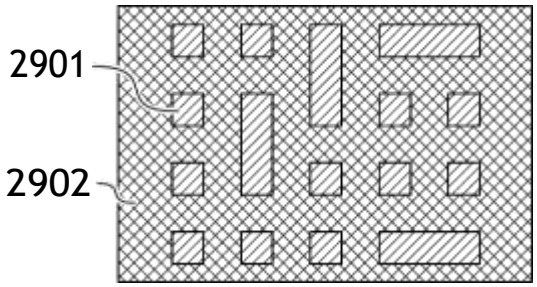

FIG. 28B

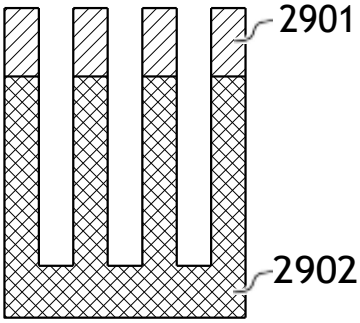

FIG. 29B

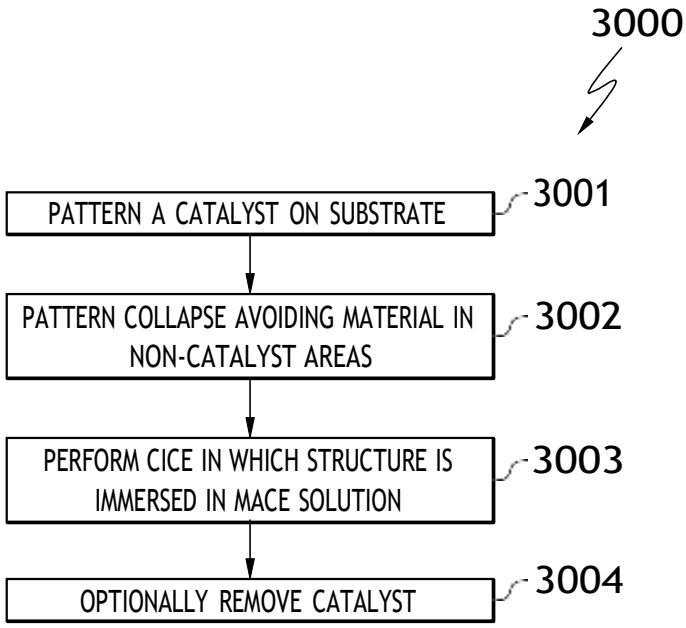
3000
PATTERN A CATALYST ON SUBSTRATE
3001
PATTERN COLLAPSE AVOIDING MATERIAL IN NON-CATALYST AREAS
3002
PERFORM CICE IN WHICH STRUCTURE IS IMMERSED IN MACE SOLUTION
3003
OPTIONALLY REMOVE CATALYST
3004

FIG. 30

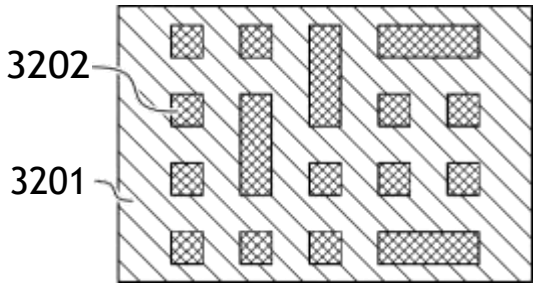

FIG. 31A

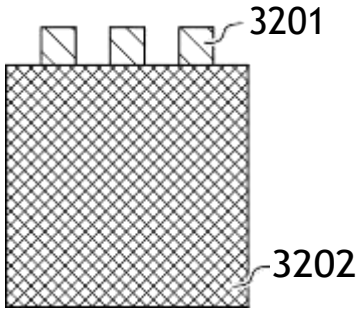

FIG. 32A

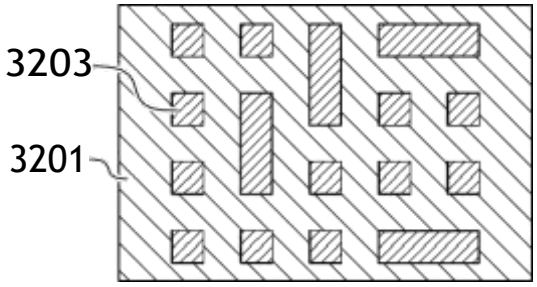

FIG. 31B

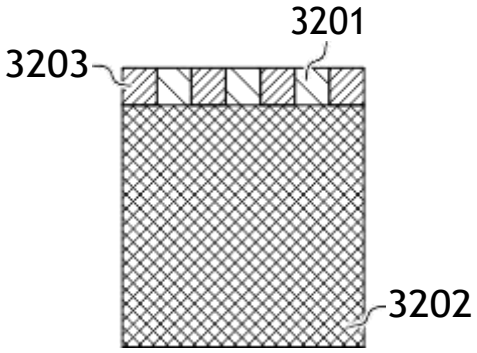

FIG. 32B

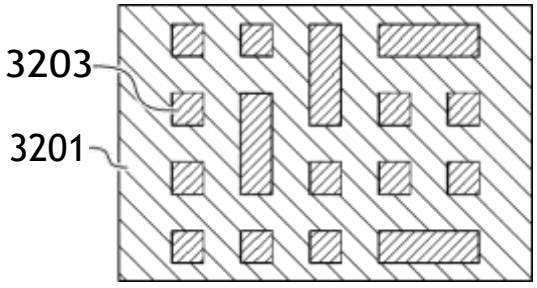

FIG. 31C

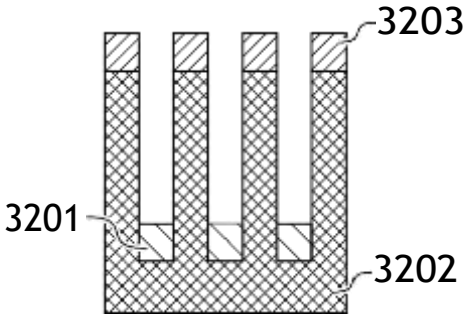

FIG. 32C

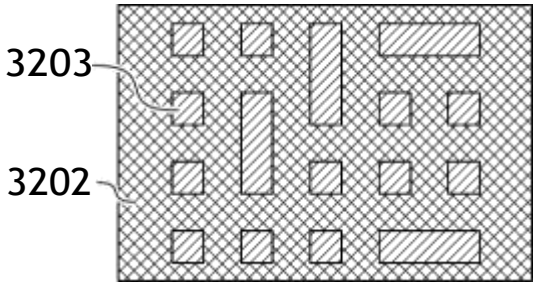

FIG. 31D

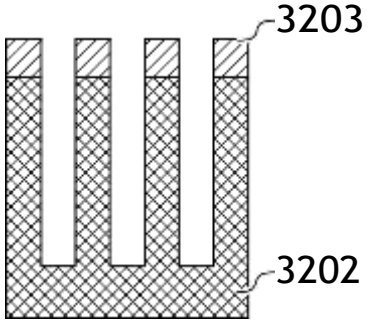

FIG. 32D

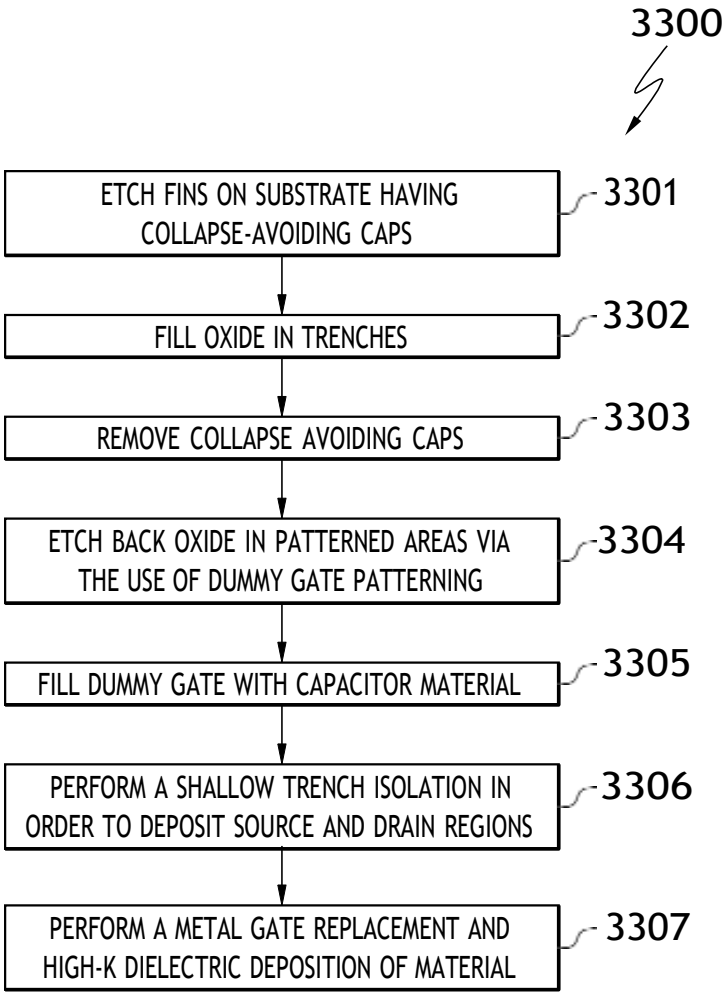
3300
ETCH FINS ON SUBSTRATE HAVING COLLAPSE-AVOIDING CAPS
3301
FILL OXIDE IN TRENCHES
3302
REMOVE COLLAPSE AVOIDING CAPS
3303
ETCH BACK OXIDE IN PATTERNED AREAS VIA THE USE OF DUMMY GATE PATTERNING
3304
FILL DUMMY GATE WITH CAPACITOR MATERIAL
3305
PERFORM A SHALLOW TRENCH ISOLATION IN ORDER TO DEPOSIT SOURCE AND DRAIN REGIONS
3306
PERFORM A METAL GATE REPLACEMENT AND HIGH-K DIELECTRIC DEPOSITION OF MATERIAL
3307

FIG. 33

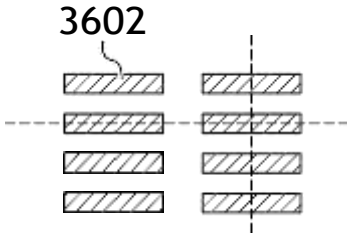

FIG. 34A

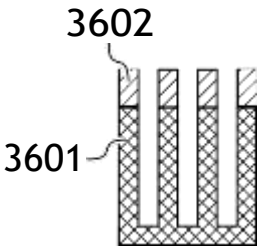

FIG. 35A

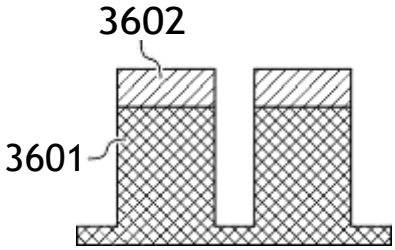

FIG. 36A

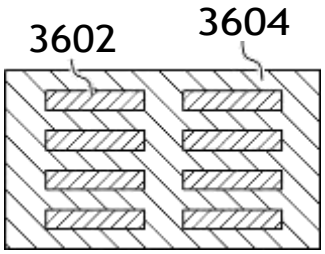

FIG. 34B

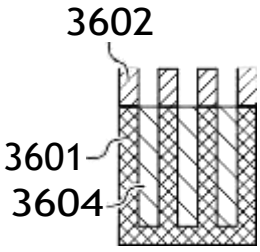

FIG. 35B

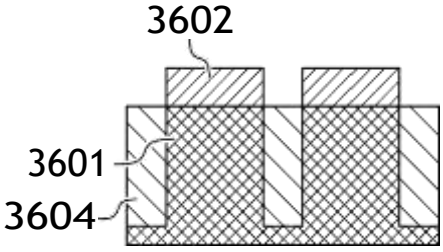

FIG. 36B

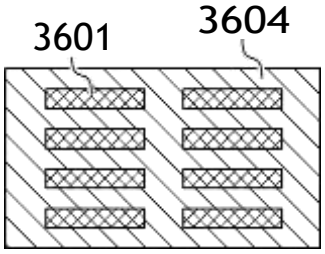

FIG. 34C

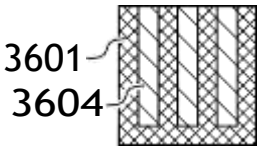

FIG. 35C

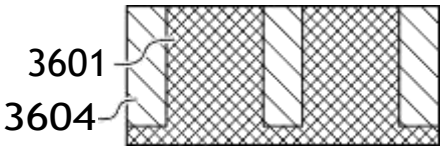

FIG. 36C

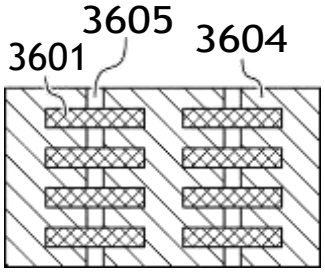

FIG. 34D

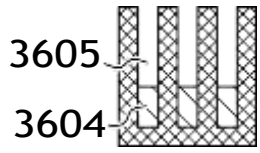

FIG. 35D

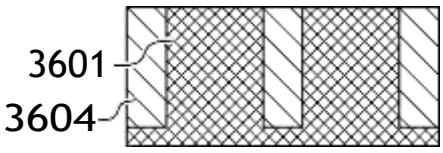

FIG. 36D

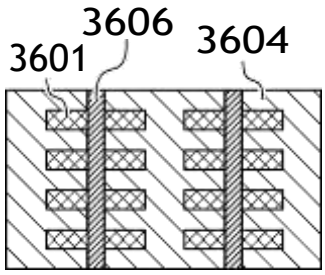

FIG. 34E

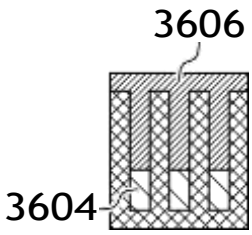

FIG. 35E

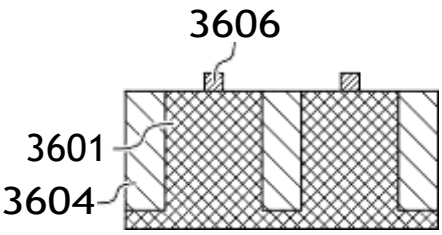

FIG. 36E

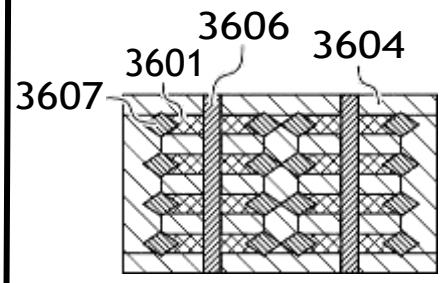

FIG. 34F

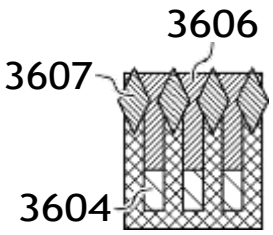

FIG. 35F

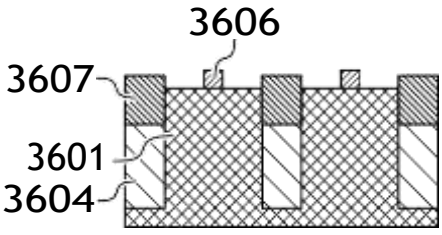

FIG. 36F

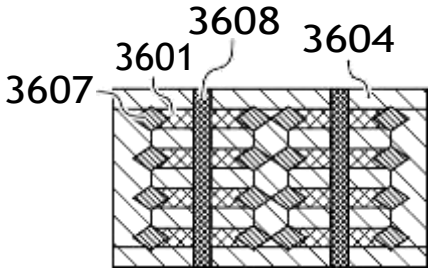

FIG. 34G

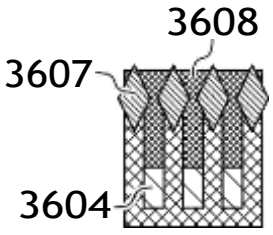

FIG. 35G

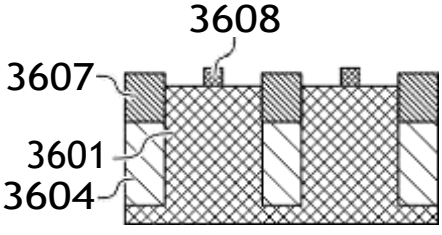

FIG. 36G

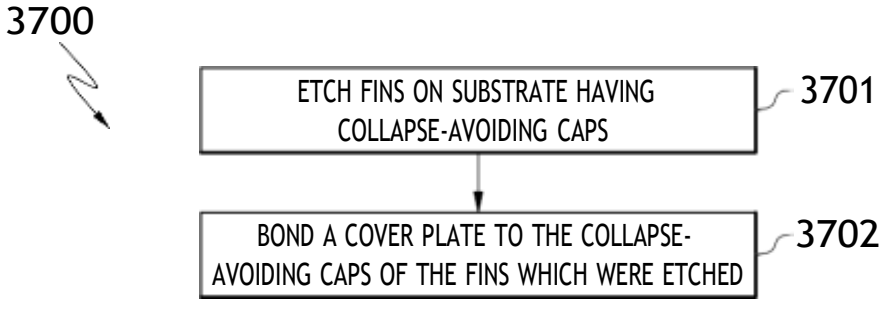

FIG. 37

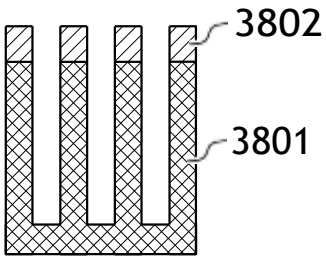

FIG. 38A

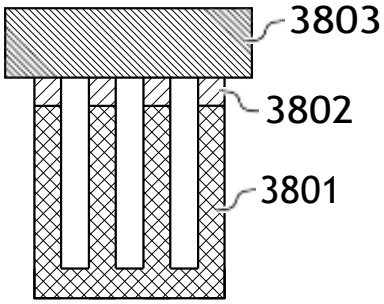

FIG. 38B

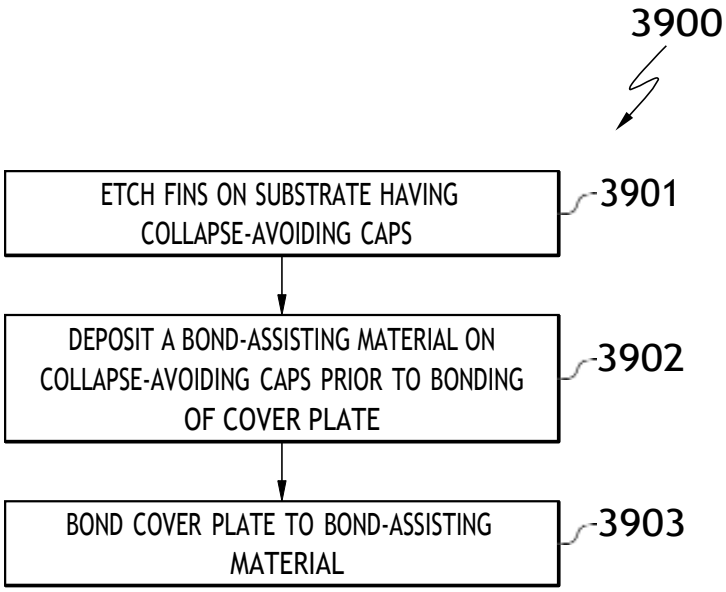
3900
ETCH FINS ON SUBSTRATE HAVING COLLAPSE-AVOIDING CAPS
3901
DEPOSIT A BOND-ASSISTING MATERIAL ON COLLAPSE-AVOIDING CAPS PRIOR TO BONDING OF COVER PLATE
3902
BOND COVER PLATE TO BOND-ASSISTING MATERIAL
3903

FIG. 39

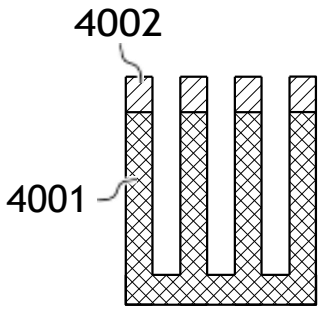

FIG. 40A

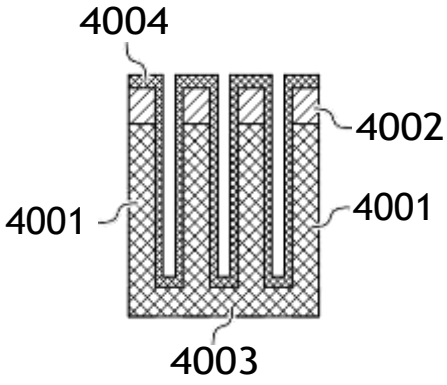

FIG. 40B

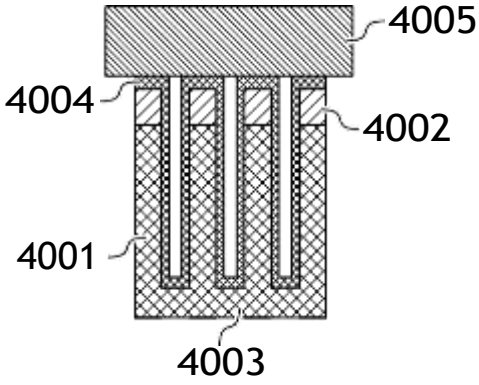

FIG. 40C

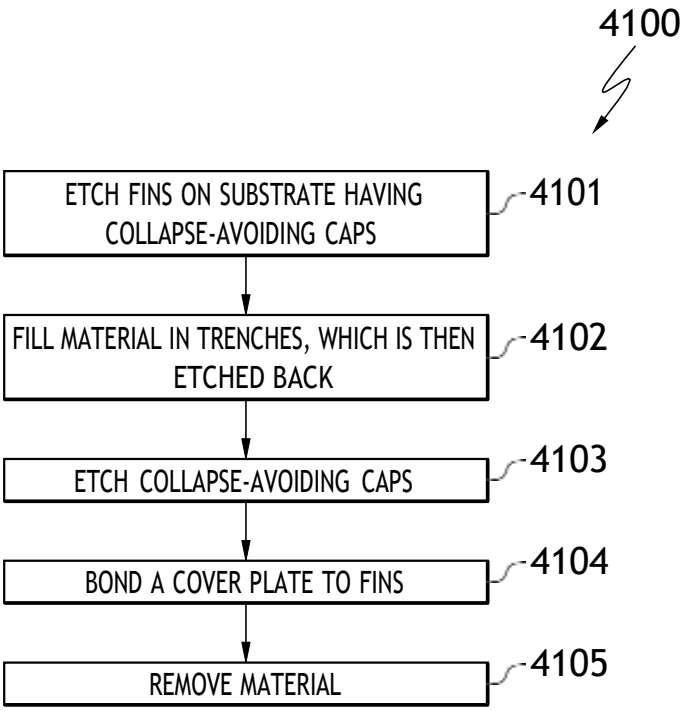
4100
ETCH FINS ON SUBSTRATE HAVING COLLAPSE-AVOIDING CAPS
4101
FILL MATERIAL IN TRENCHES, WHICH IS THEN ETCHED BACK
4102
ETCH COLLAPSE-AVOIDING CAPS
4103
BOND A COVER PLATE TO FINS
4104
REMOVE MATERIAL
4105

FIG. 41

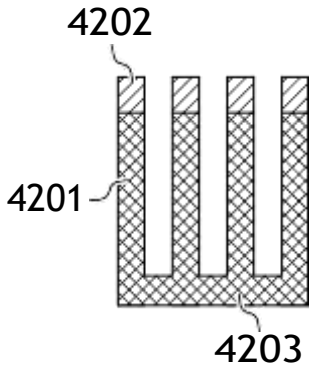

FIG. 42A

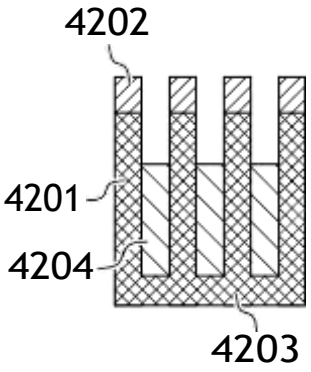

FIG. 42B

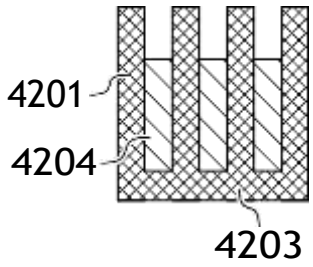

FIG. 42C

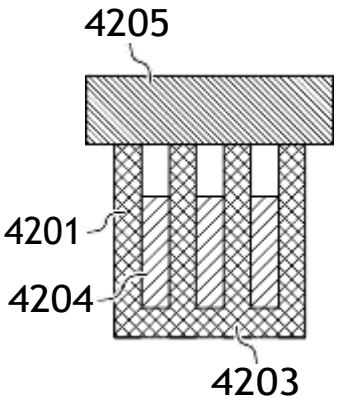

FIG. 42D

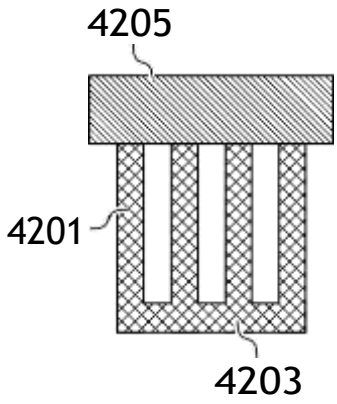

FIG. 42E

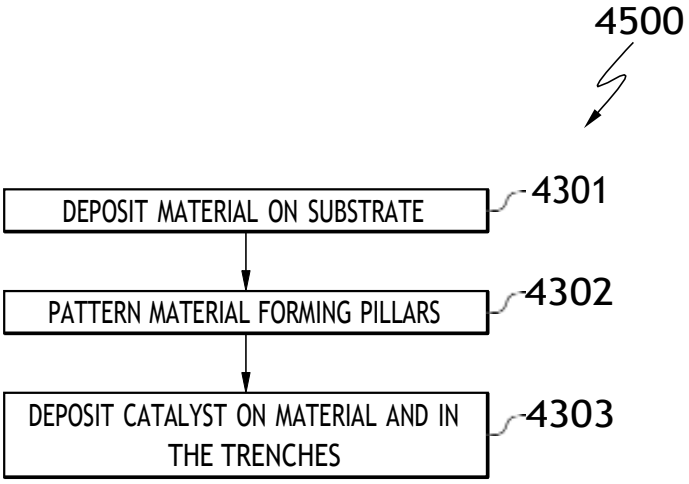
4500
DEPOSIT MATERIAL ON SUBSTRATE
4301
PATTERN MATERIAL FORMING PILLARS
4302
DEPOSIT CATALYST ON MATERIAL AND IN THE TRENCHES
4303

FIG. 43

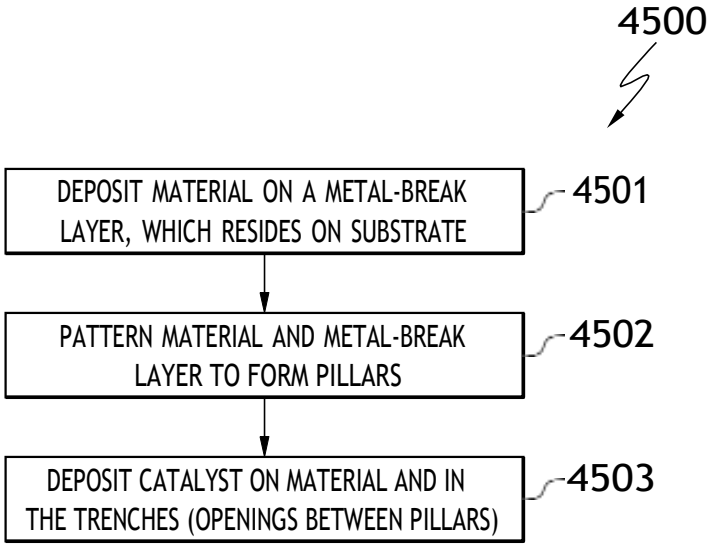
4500
DEPOSIT MATERIAL ON A METAL-BREAK LAYER, WHICH RESIDES ON SUBSTRATE
4501
PATTERN MATERIAL AND METAL-BREAK LAYER TO FORM PILLARS
4502
DEPOSIT CATALYST ON MATERIAL AND IN THE TRENCHES (OPENINGS BETWEEN PILLARS)
4503

FIG. 45

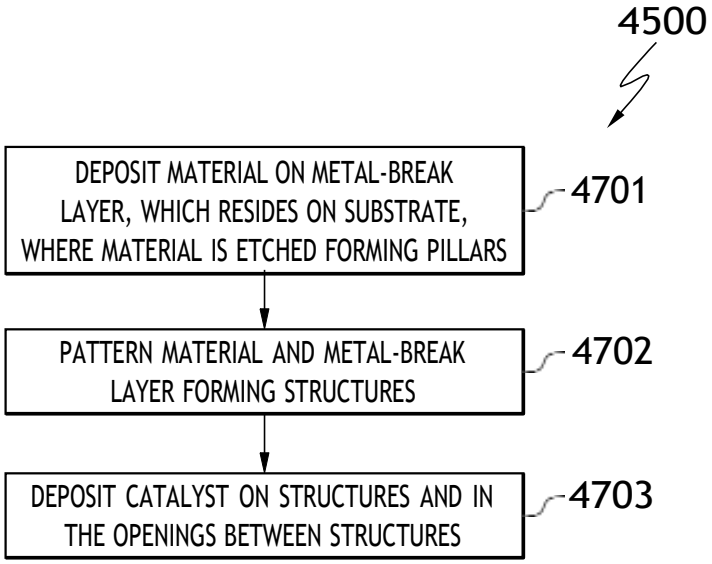
4500
DEPOSIT MATERIAL ON METAL-BREAK LAYER, WHICH RESIDES ON SUBSTRATE, WHERE MATERIAL IS ETCHED FORMING PILLARS
4701
PATTERN MATERIAL AND METAL-BREAK LAYER FORMING STRUCTURES
4702
DEPOSIT CATALYST ON STRUCTURES AND IN THE OPENINGS BETWEEN STRUCTURES
4703

FIG. 47

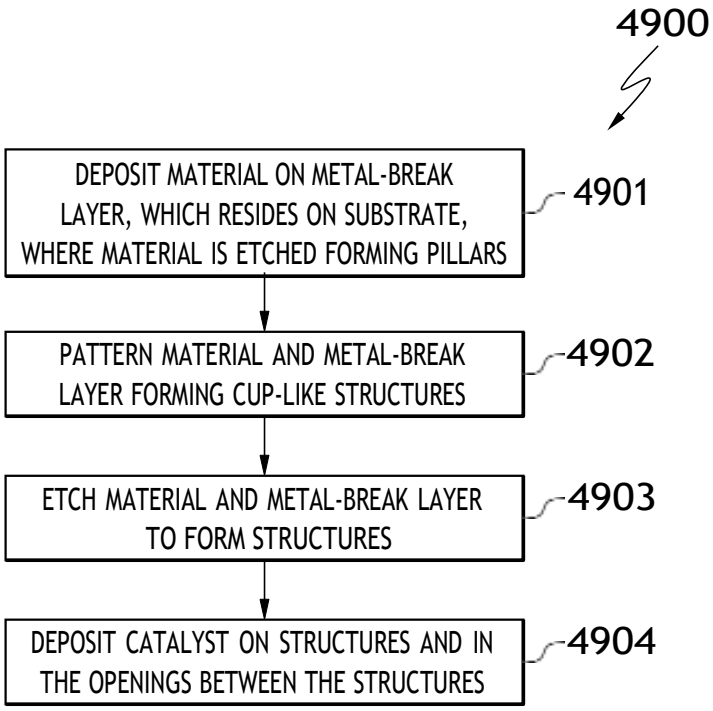
4900
DEPOSIT MATERIAL ON METAL-BREAK LAYER, WHICH RESIDES ON SUBSTRATE, WHERE MATERIAL IS ETCHED FORMING PILLARS
4901
PATTERN MATERIAL AND METAL-BREAK LAYER FORMING CUP-LIKE STRUCTURES
4902
ETCH MATERIAL AND METAL-BREAK LAYER TO FORM STRUCTURES
4903
DEPOSIT CATALYST ON STRUCTURES AND IN THE OPENINGS BETWEEN THE STRUCTURES
4904

FIG. 49

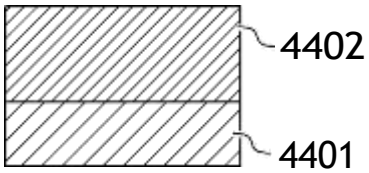

FIG. 44A

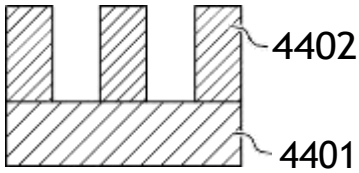

FIG. 44B

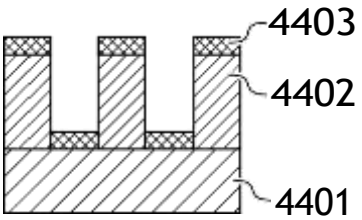

FIG. 44C

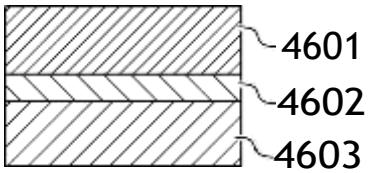

FIG. 46A

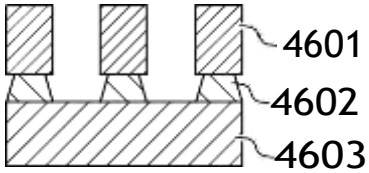

FIG. 46B

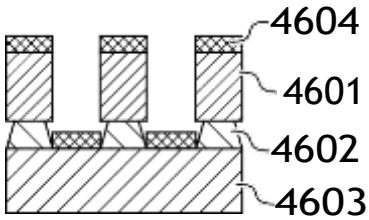

FIG. 46C

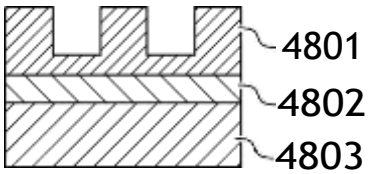

FIG. 48A

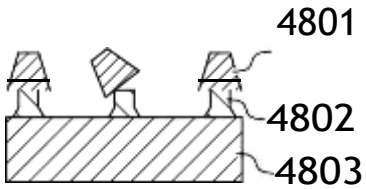

FIG. 48B

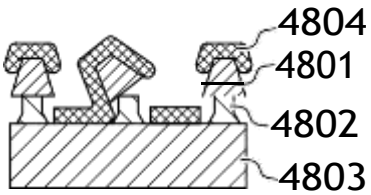

FIG. 48C

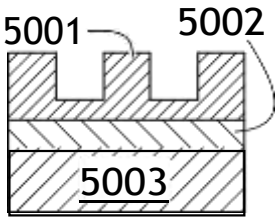

FIG. 50A

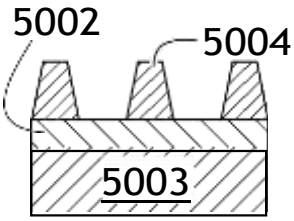

FIG. 50B

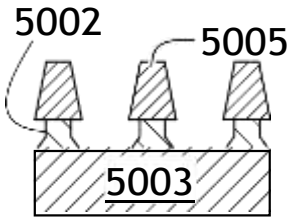

FIG. 50C

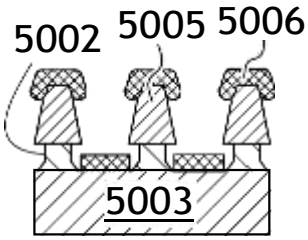

FIG. 50D

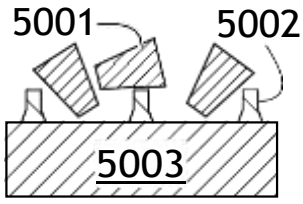

FIG. 51A

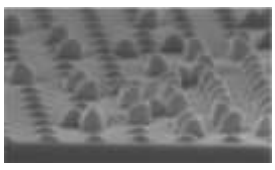

FIG. 51B

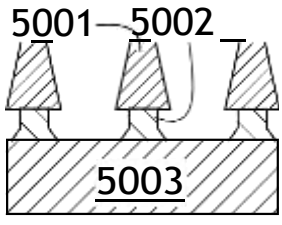

FIG. 52A

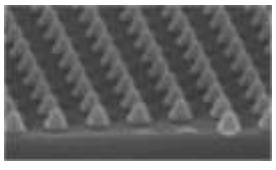

FIG. 52B

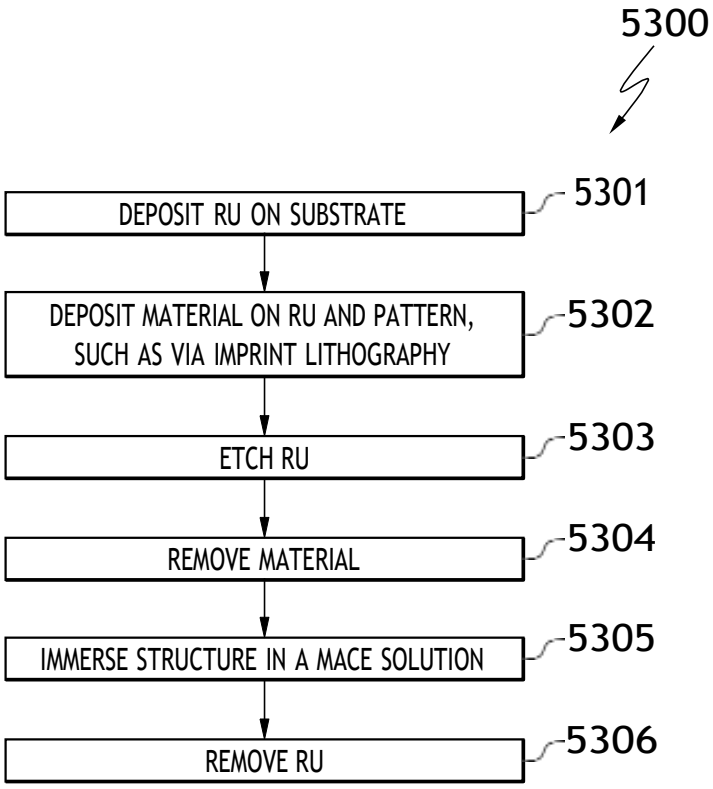
5300
DEPOSIT RU ON SUBSTRATE
5301
DEPOSIT MATERIAL ON RU AND PATTERN, SUCH AS VIA IMPRINT LITHOGRAPHY
5302
ETCH RU
5303
REMOVE MATERIAL
5304
IMMERSE STRUCTURE IN A MACE SOLUTION
5305
REMOVE RU
5306

FIG. 53

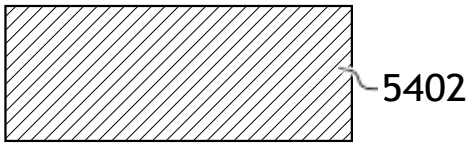

FIG. 54A

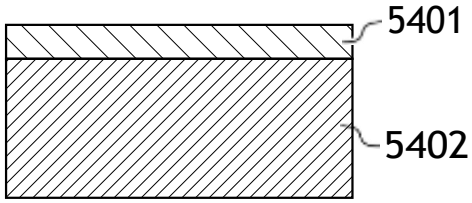

FIG. 54B

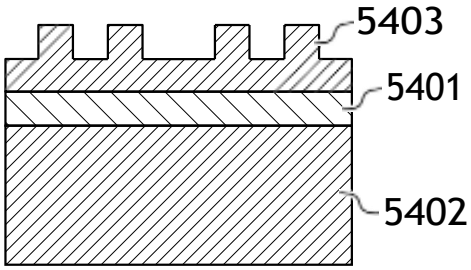

FIG. 54C

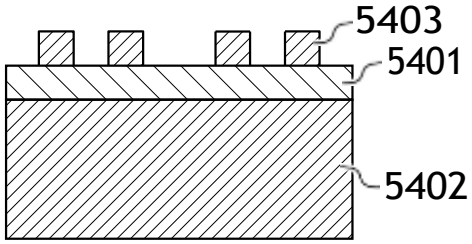

FIG. 54D

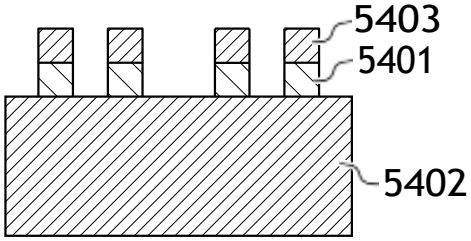

FIG. 54E

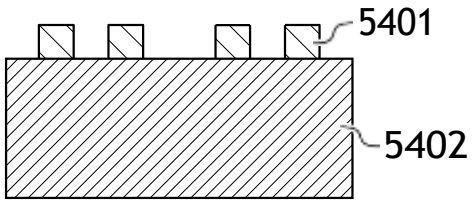

FIG. 54F

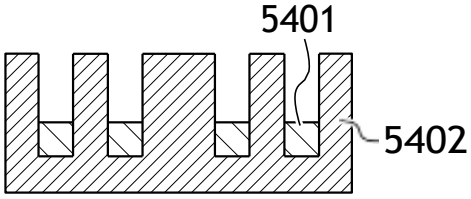

FIG. 54G

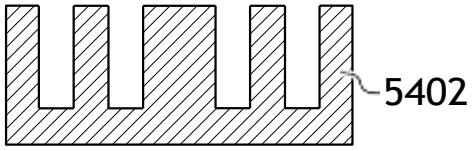

FIG. 54H

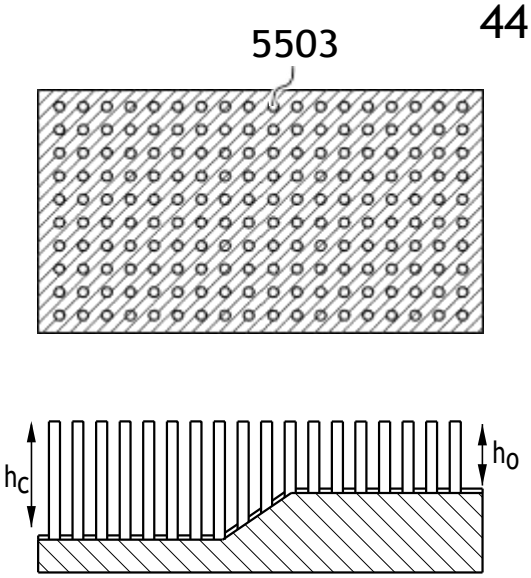

FIG. 55A

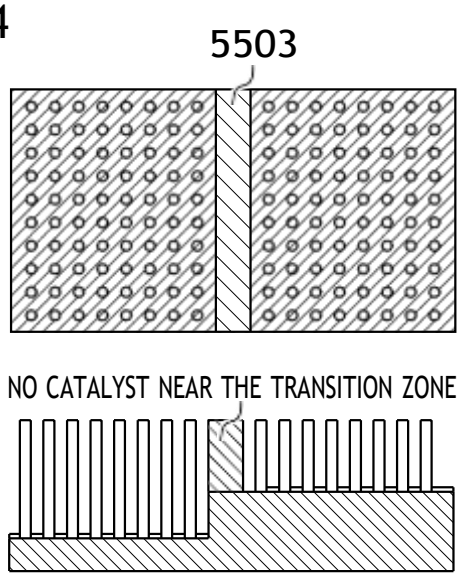

FIG. 55B

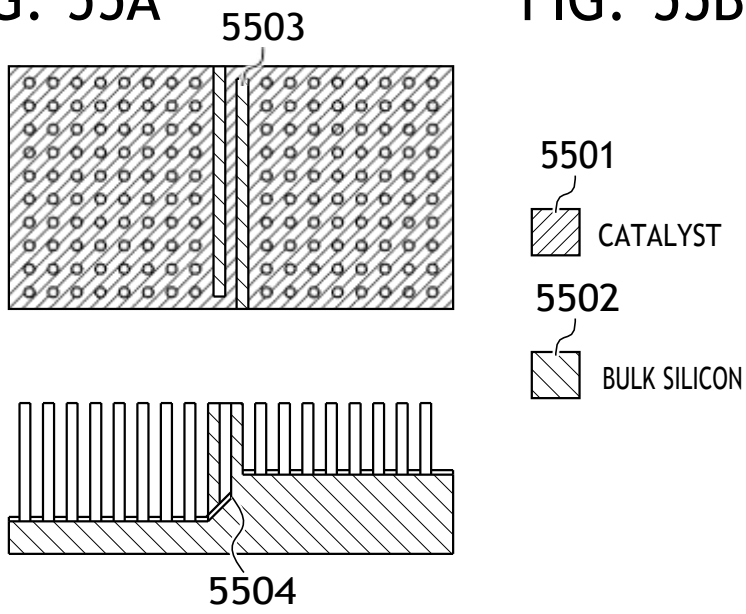

FIG. 55C

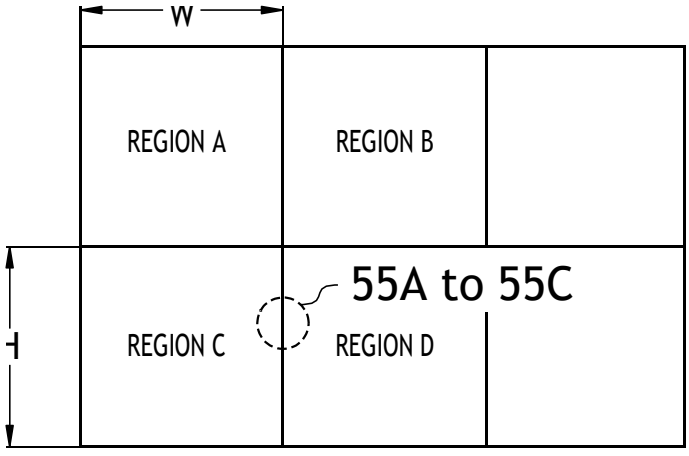

FIG. 55D

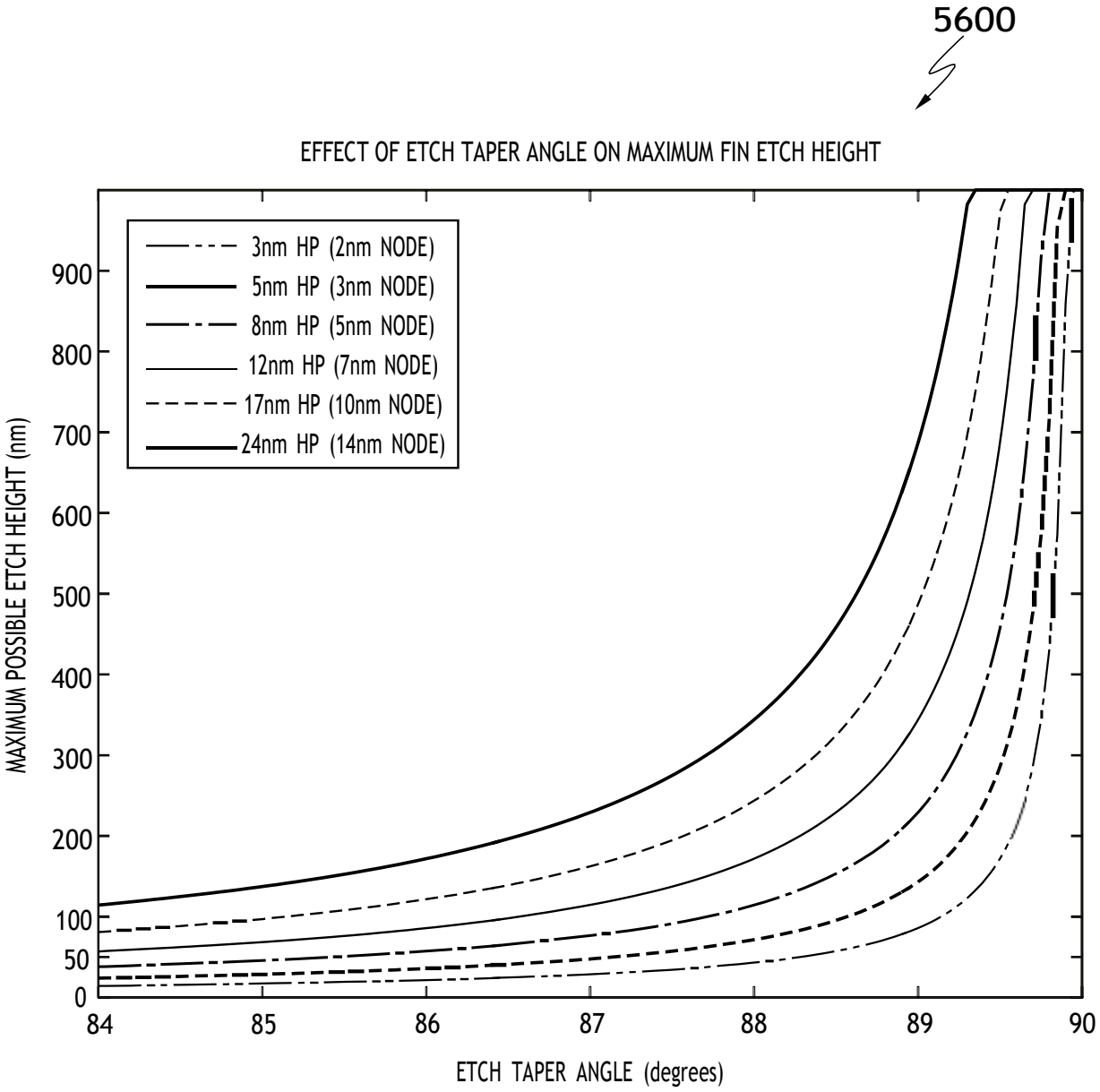
5600
EFFECT OF ETCH TAPER ANGLE ON MAXIMUM FIN ETCH HEIGHT
3nm HP (2nm NODE)
5nm HP (3nm NODE)
8nm HP (5nm NODE)
12nm HP (7nm NODE)
17nm HP (10nm NODE)
24nm HP (14nm NODE)
MAXIMUM POSSIBLE ETCH HEIGHT (nm)
900
800
700
600
500
400
300
200
100
50
0
84
85
86
87
88
89
90
ETCH TAPER ANGLE (degrees)

FIG. 56

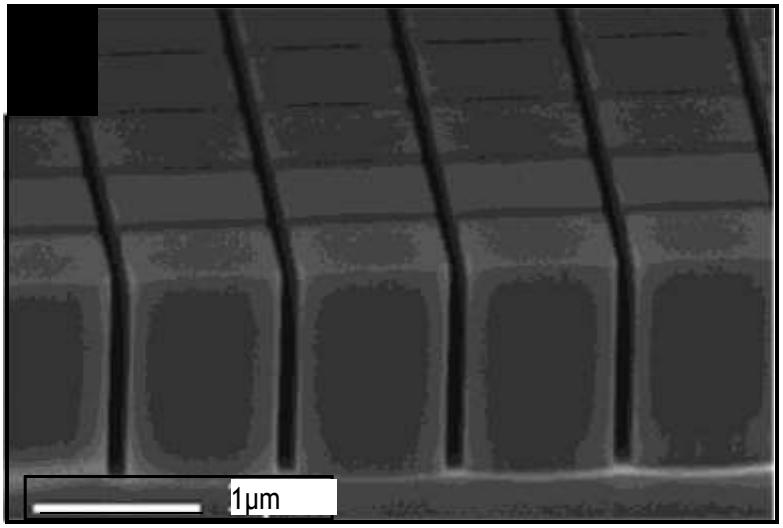

FIG. 57A

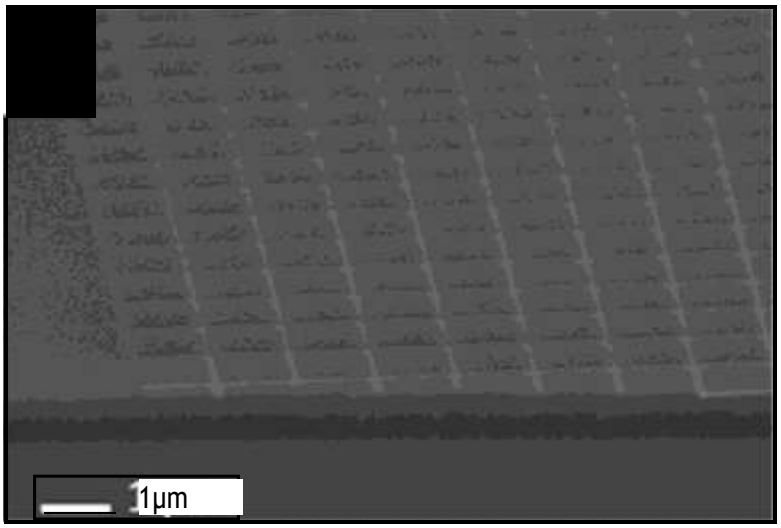

FIG. 57B

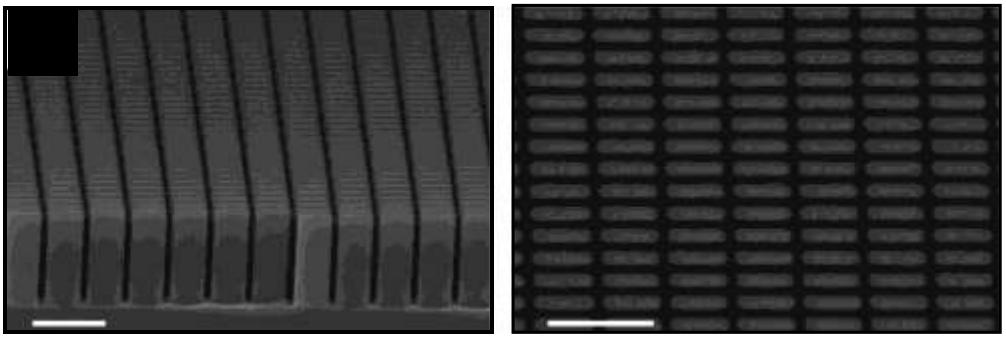

FIG. 58A

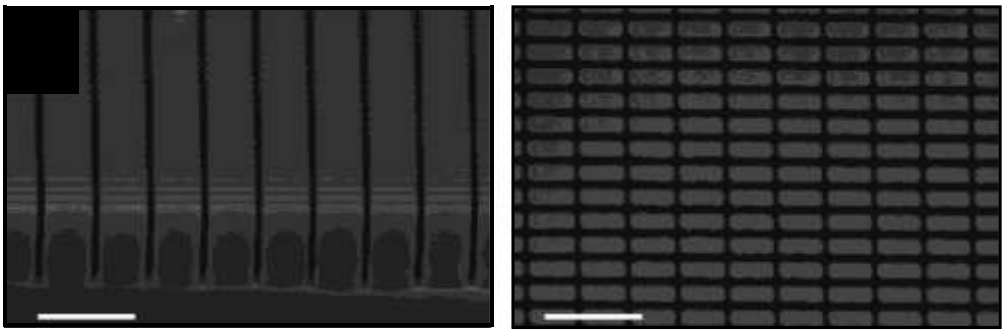

FIG. 58B

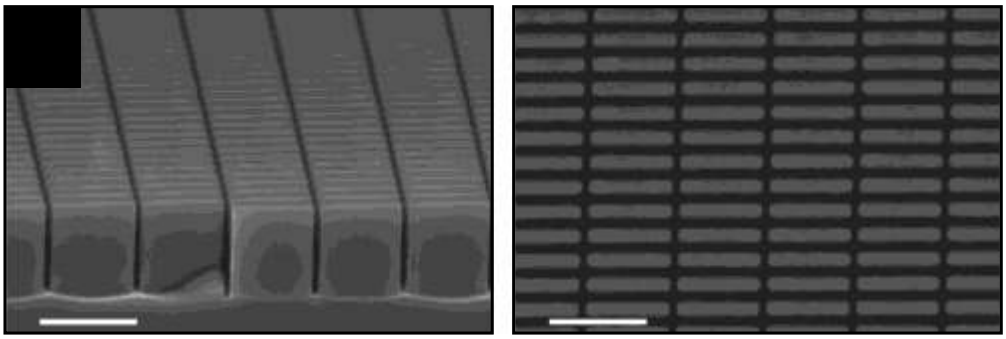

FIG. 58C

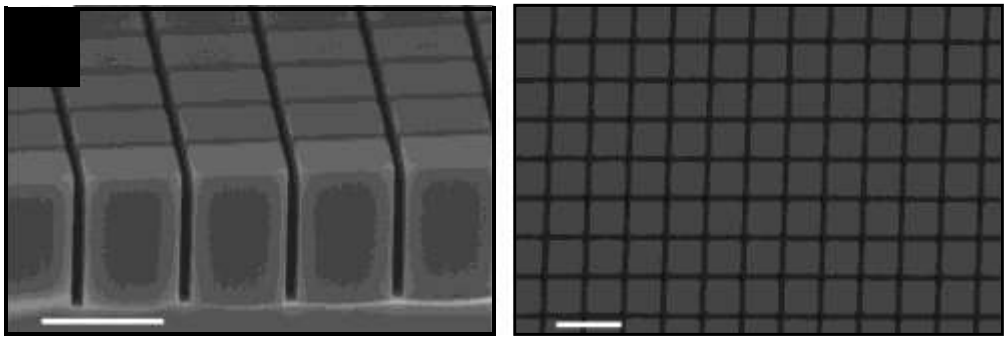

FIG. 58D

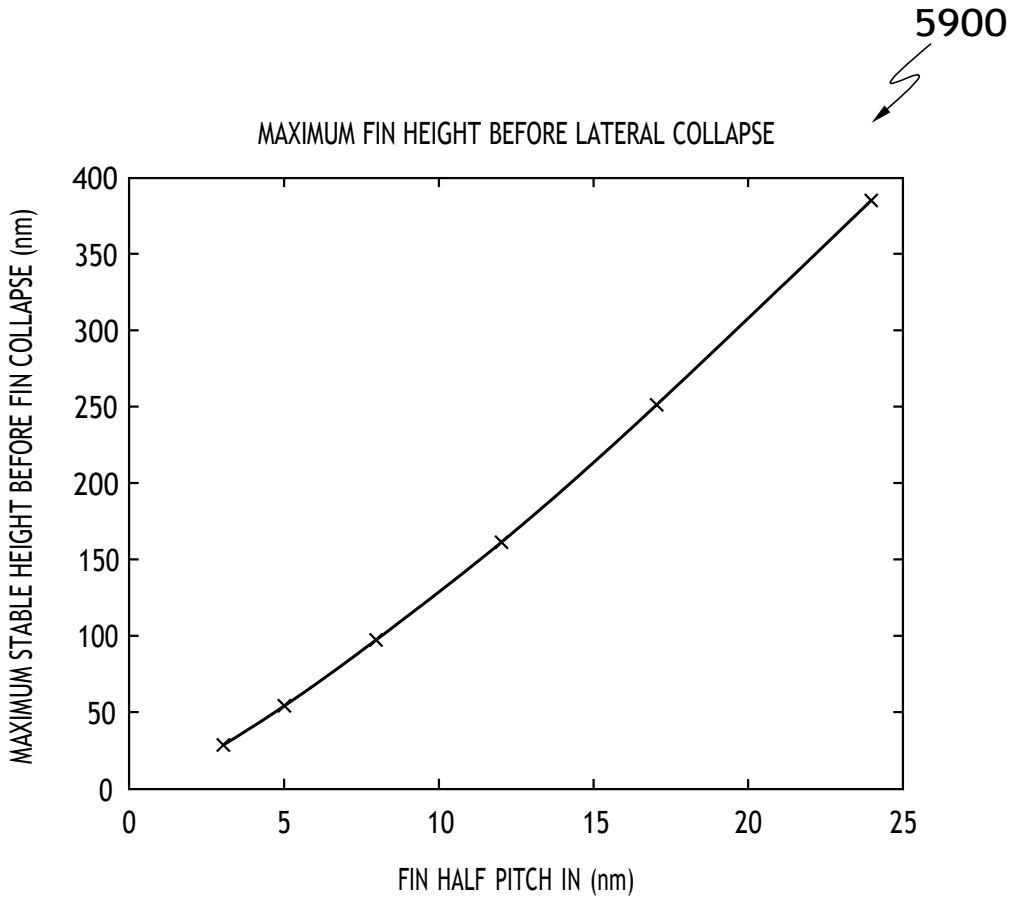
5900
MAXIMUM FIN HEIGHT BEFORE LATERAL COLLAPSE
MAXIMUM STABLE HEIGHT BEFORE FIN COLLAPSE (nm)
400
350
300
250
200
150
100
50
0
0
5
10
15
20
25
FIN HALF PITCH IN (nm)

FIG. 59

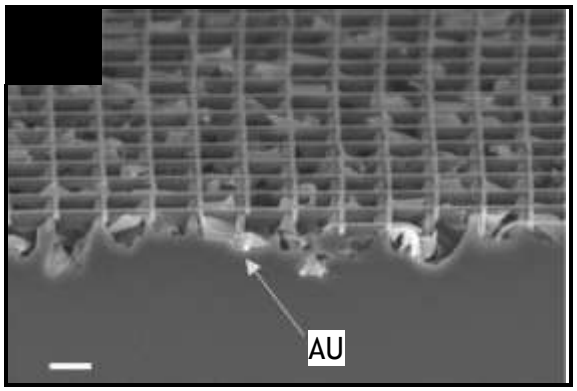

FIG. 60A

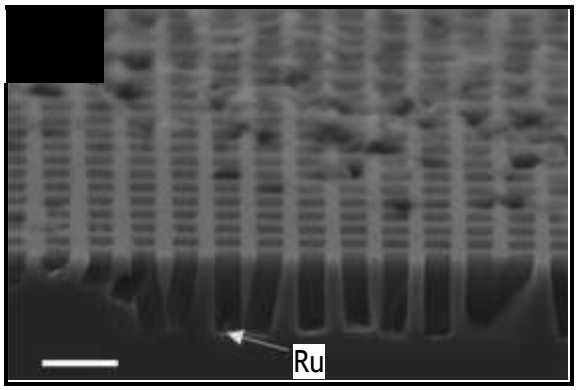

FIG. 60B

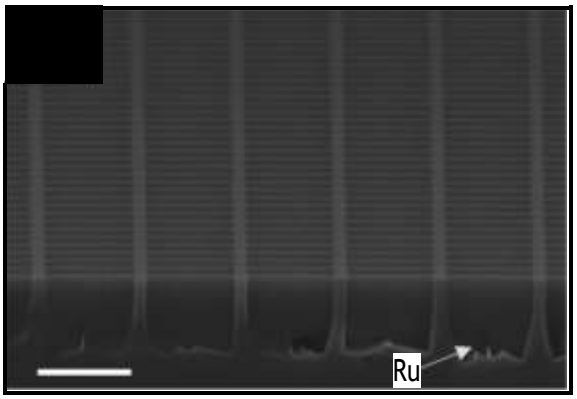

FIG. 60C

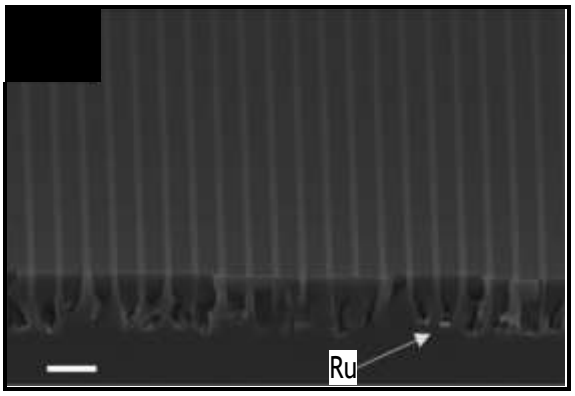

FIG. 60D

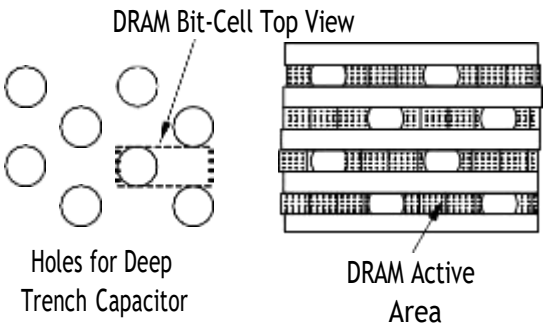

FIG. 61A

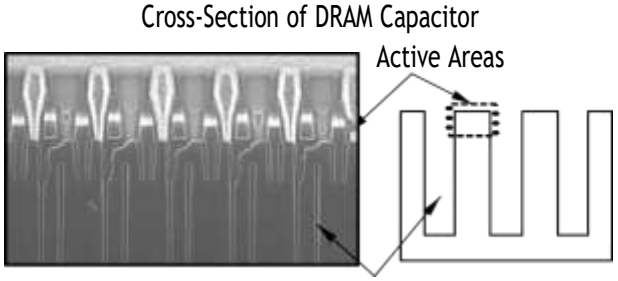

FIG. 61B

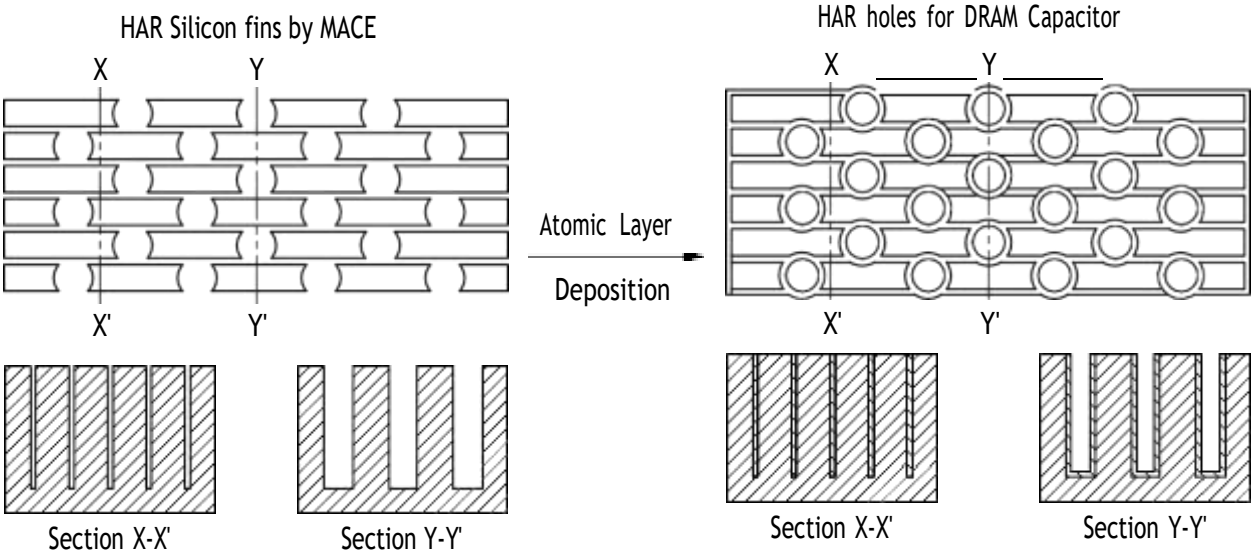

FIG. 61C

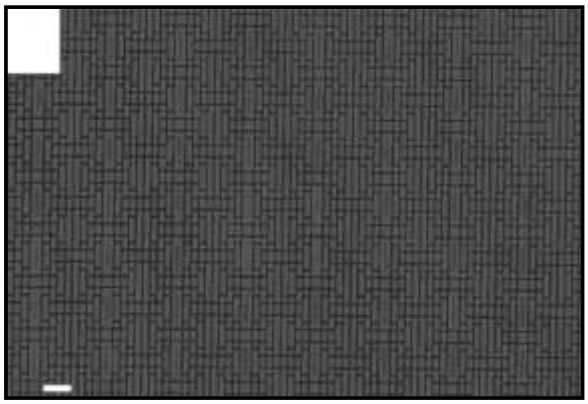

FIG. 62A

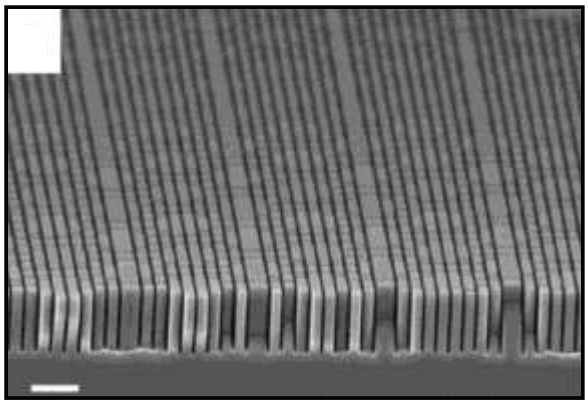

FIG. 62B

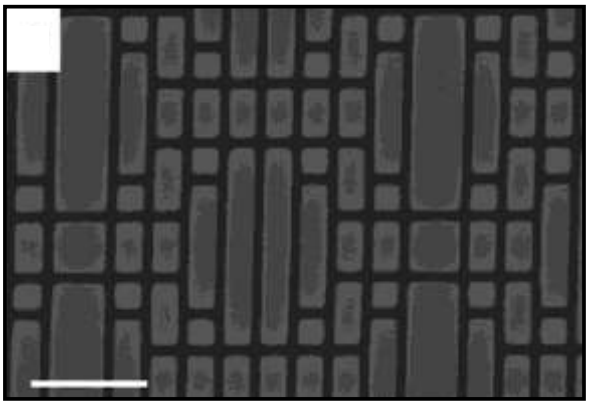

FIG. 62C

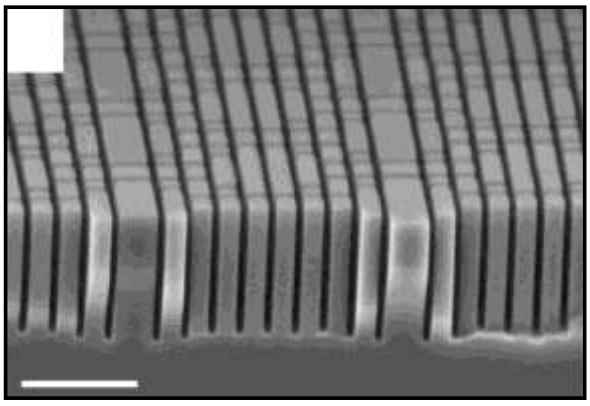

FIG. 62D

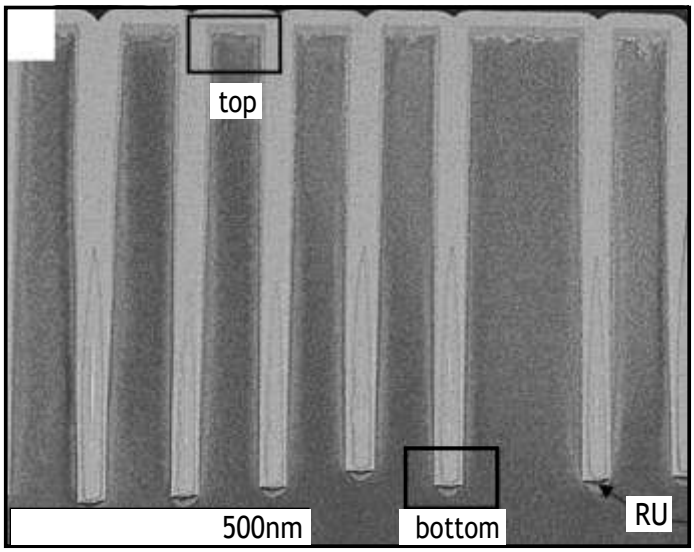

FIG. 63A

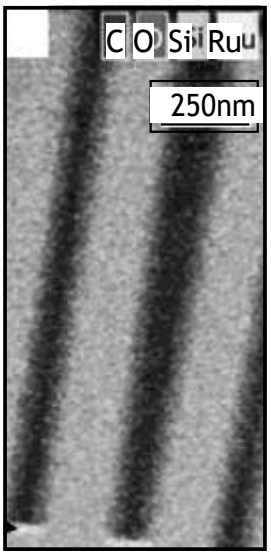

FIG. 63B

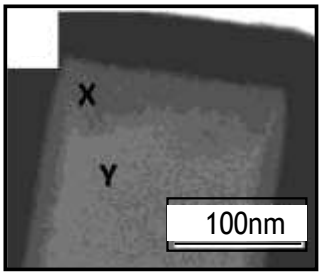

FIG. 63C

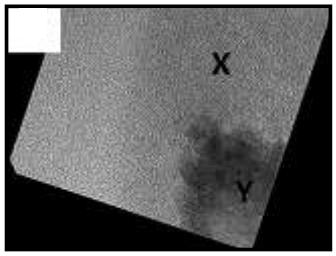

FIG. 63D

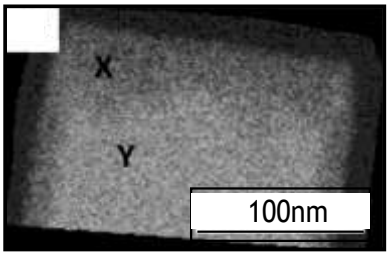

FIG. 63E

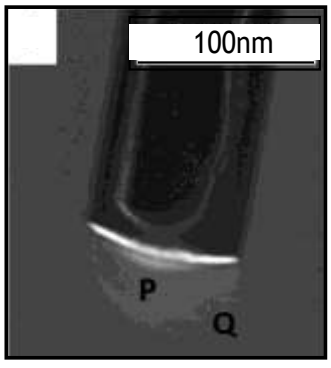

FIG. 63F

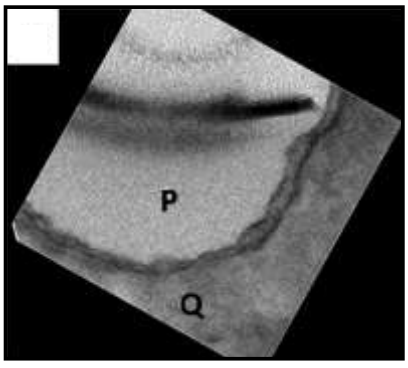

FIG. 63G

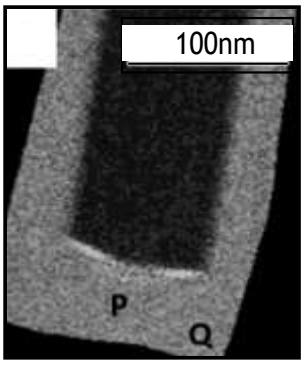

FIG. 63H

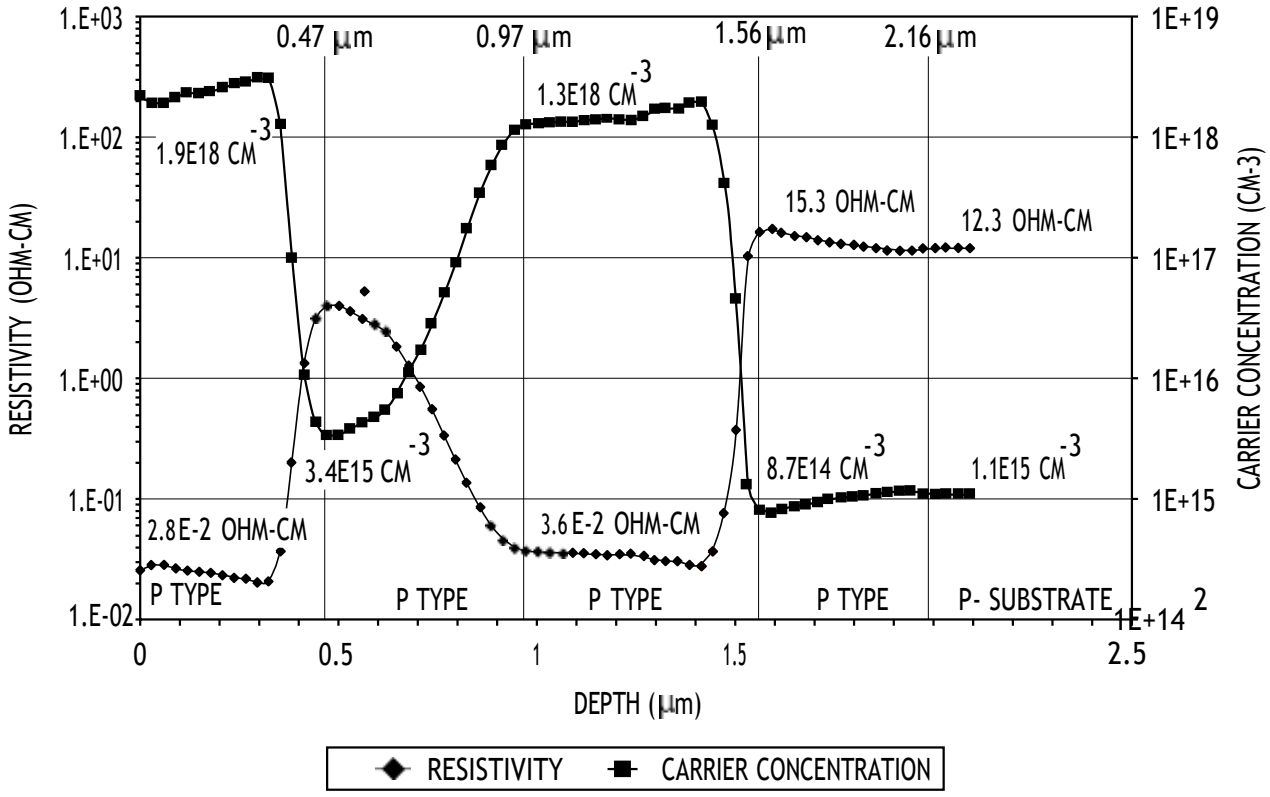

FIG. 64A

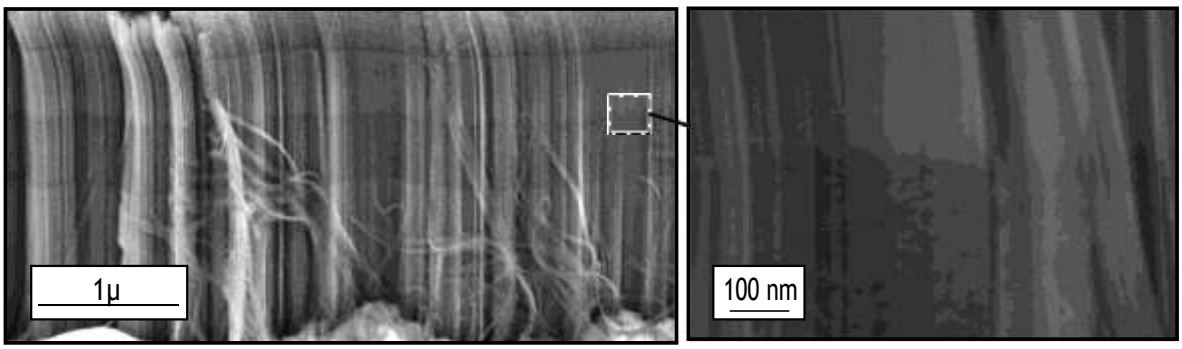

FIG. 64B

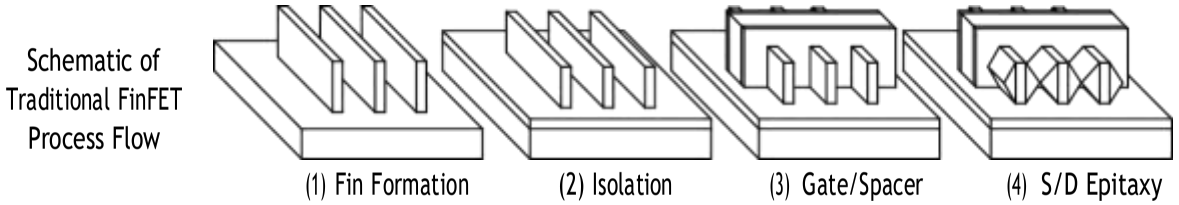

FIG. 65A

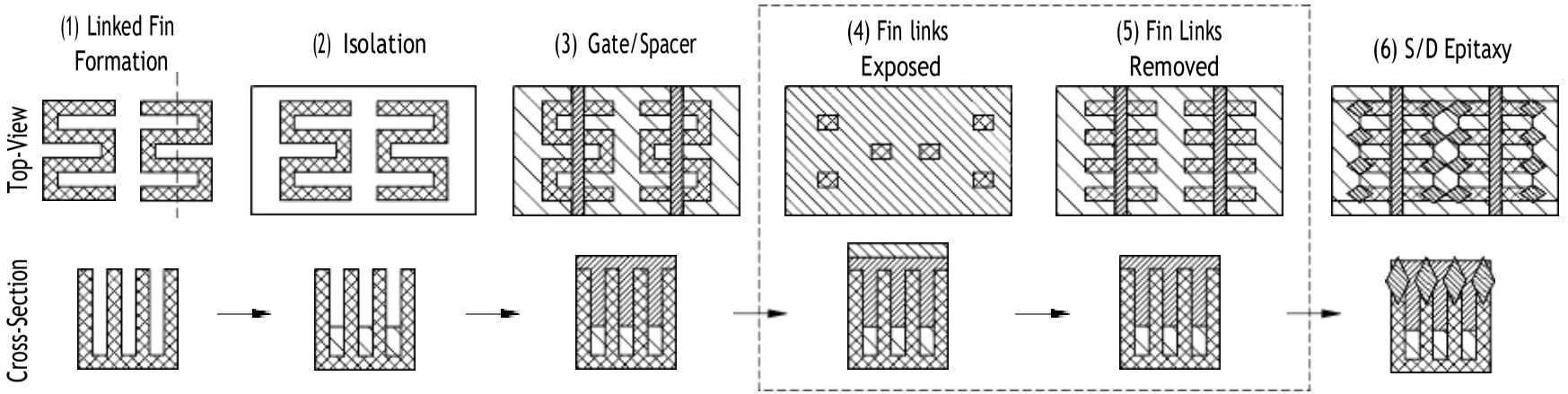

FIG. 65B