(12) INTERNATIONAL APPLICATION PUBLISHED UNDER THE PATENT COOPERATION TREATY (PCT)

(19) World Intellectual Property Organization
International Bureau

(43) International Publication Date
18 October 2007 (18.10.2007)

PCT

(10) International Publication Number
WO 2007/117449 A3

(51) International Patent Classification:
H02J 1/02 (2006.01)

(21) International Application Number:
PCT/US2007/008286

(22) International Filing Date: 2 April 2007 (02.04.2007)

(25) Filing Language: English

(26) Publication Language: English

(30) Priority Data:
60/788,322 31 March 2006 (31.03.2006) US

(71) Applicant *(for all designated States except US)*: **LEVELER LLC** [US/US]; 5120 Belmont Road, Suite E, Downers Grove, IL 60515 (US).

(72) Inventors; and

(75) Inventors/Applicants *(for US only)*: **JANUSZEWSKI, Michael, W.** [US/US]; 5805 Lee Avenue, Downers Grove, IL 60516 (US). **WEBSTER, Leonard, E.** [US/US]; 634 W. Surf Street, Chicago, IL 60657 (US).

(74) Agent: **McCRACKEN, William, E.**; McCracken and Frank LLP, 311 S. Wacker Drive, Suite 2500, Chicago, IL 60606 (US).

(81) Designated States *(unless otherwise indicated, for every kind of national protection available)*: AE, AG, AL, AM, AT, AU, AZ, BA, BB, BG, BH, BR, BW, BY, BZ, CA, CH, CN, CO, CR, CU, CZ, DE, DK, DM, DZ, EC, EE, EG, ES, FI, GB, GD, GE, GH, GM, GT, HN, HR, HU, ID, IL, IN, IS, JP, KE, KG, KM, KN, KP, KR, KZ, LA, LC, LK, LR, LS, LT, LU, LY, MA, MD, MG, MK, MN, MW, MX, MY, MZ, NA, NG, NI, NO, NZ, OM, PG, PH, PL, PT, RO, RS, RU, SC, SD, SE, SG, SK, SL, SM, SV, SY, TJ, TM, TN, TR, TT, TZ, UA, UG, US, UZ, VC, VN, ZA, ZM, ZW.

(84) Designated States *(unless otherwise indicated, for every kind of regional protection available)*: ARIPO (BW, GH, GM, KE, LS, MW, MZ, NA, SD, SL, SZ, TZ, UG, ZM, ZW), Eurasian (AM, AZ, BY, KG, KZ, MD, RU, TJ, TM), European (AT, BE, BG, CH, CY, CZ, DE, DK, EE, ES, FI, FR, GB, GR, HU, IE, IS, IT, LT, LU, LV, MC, MT, NL, PL, PT, RO, SE, SI, SK, TR), OAPI (BF, BJ, CF, CG, CI, CM, GA, GN, GQ, GW, ML, MR, NE, SN, TD, TG).

Published:
— *with international search report*
— *before the expiration of the time limit for amending the claims and to be republished in the event of receipt of amendments*

(88) Date of publication of the international search report:
24 April 2008

(54) Title: POLYPHASE POWER CONDITIONING CIRCUITS

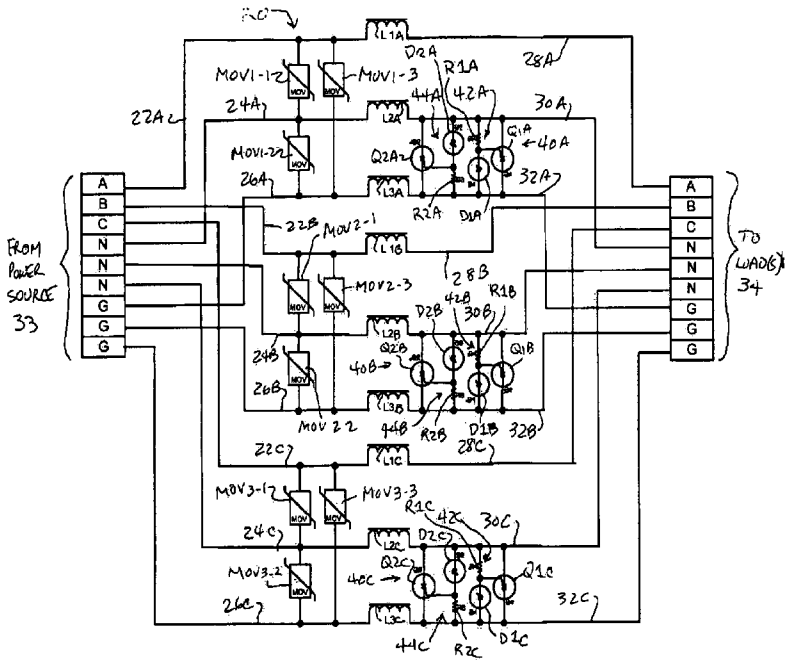

(57) Abstract: A polyphase power conditioning circuit for conditioning power supplied by a power source at a nominal frequency over line, neutral and ground conductors for each of a number of phases includes first, second and third impedances coupled to the line, neutral and ground conductors, respectively, and to output lines for each phase. Each of the impedances prevents power at frequencies greater than the nominal frequency from reaching the output lines.

WO 2007/117449 A3