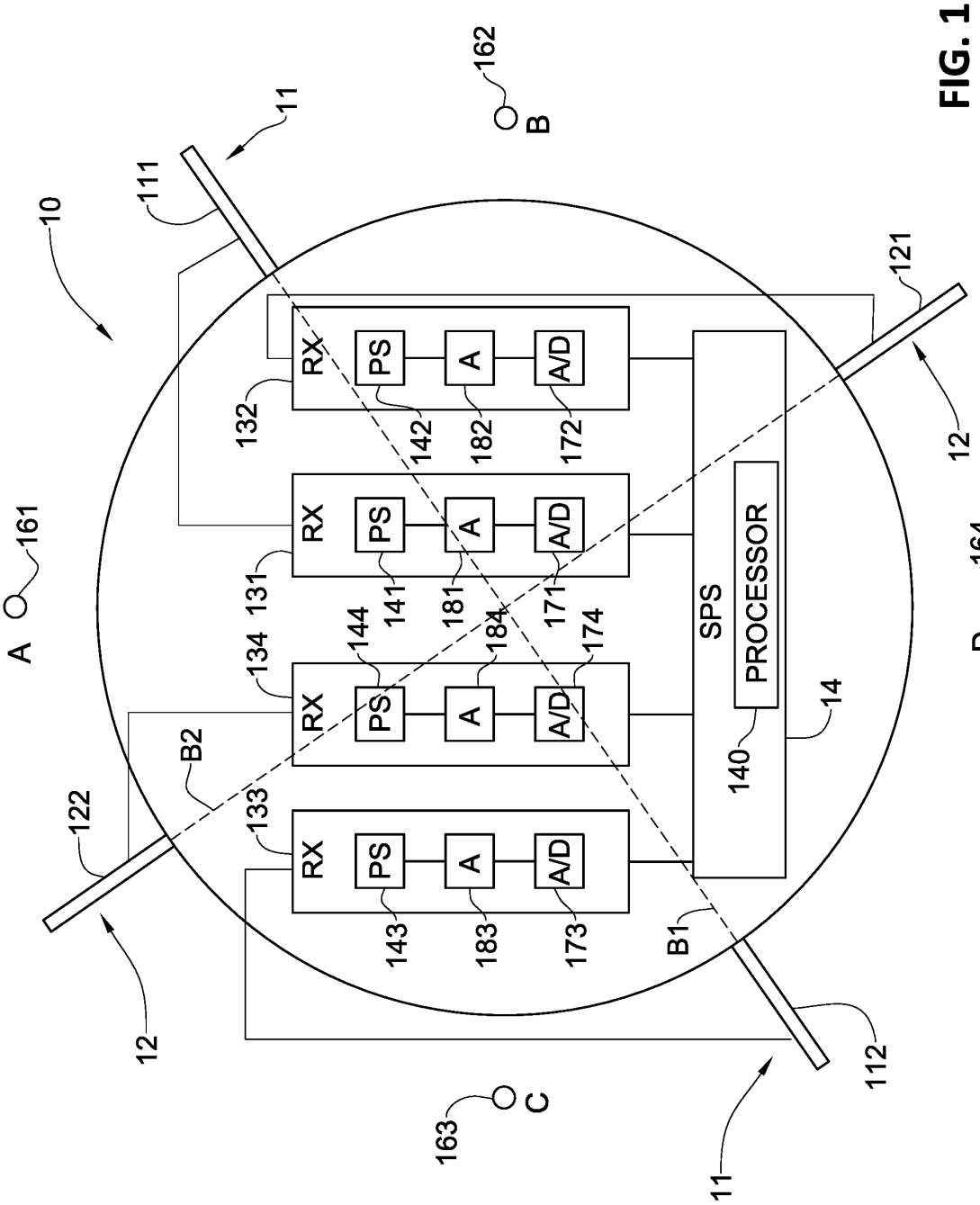
10
11
111
162
B
121
12
161
A
164
D
RX
PS
A
A/D
131
132
133
134
141
142
143
144
171
172
173
174
181
182
183
184
SPS
PROCESSOR
140
14
B2
B1
122
12
163
C
11
112

FIG. 1

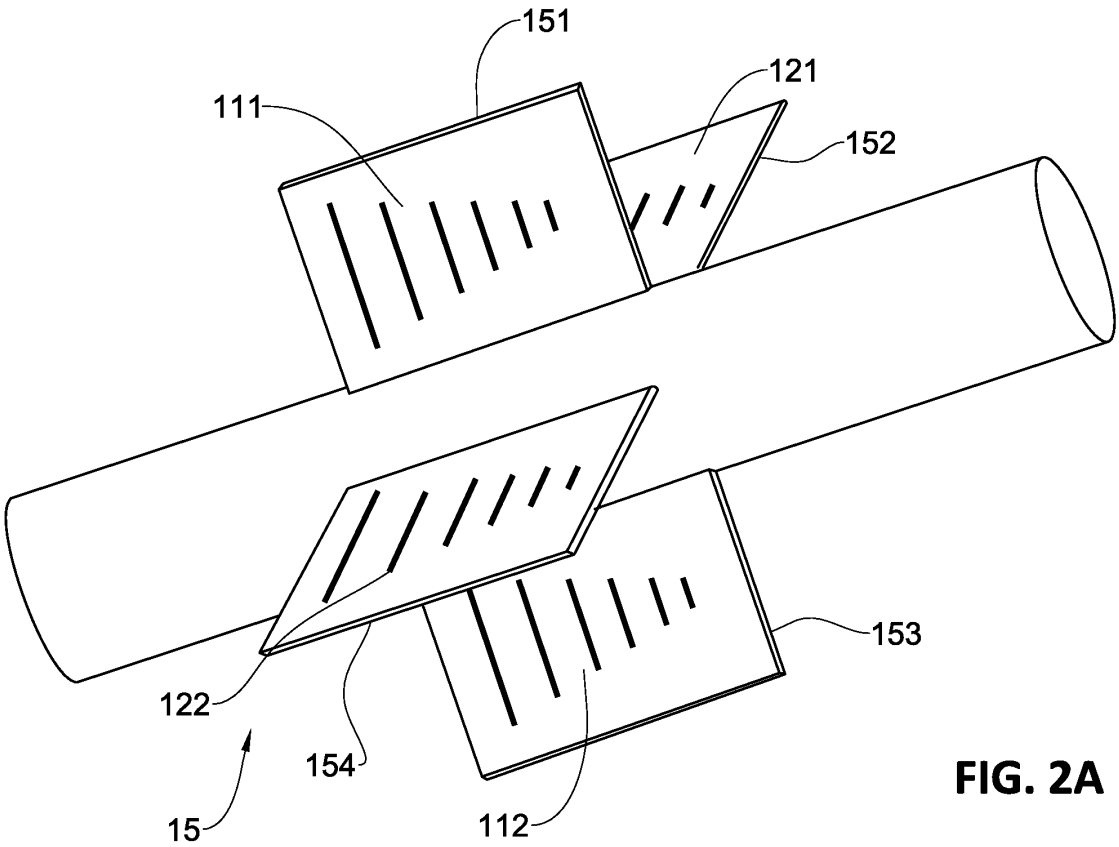

FIG. 2A

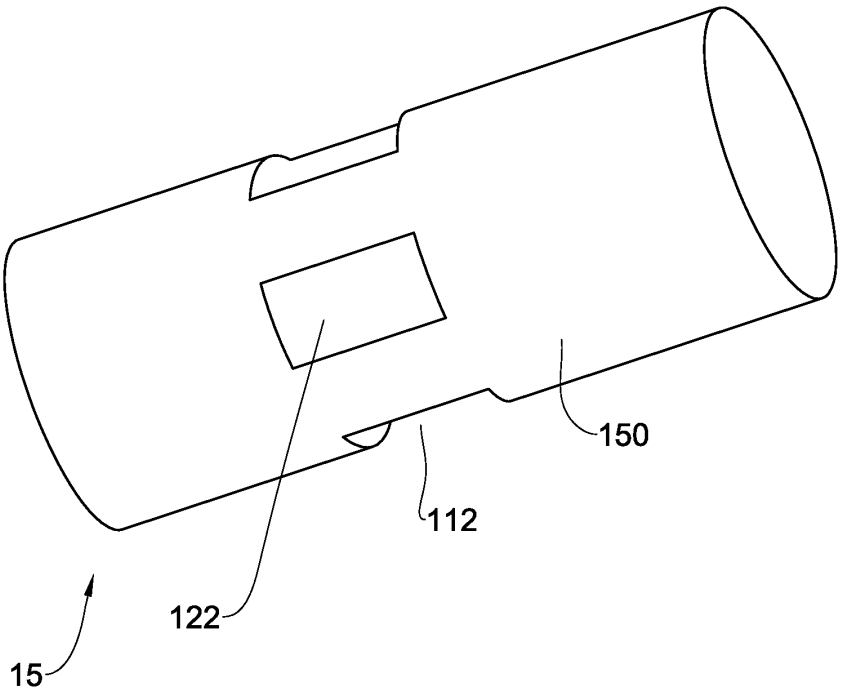

FIG. 2B

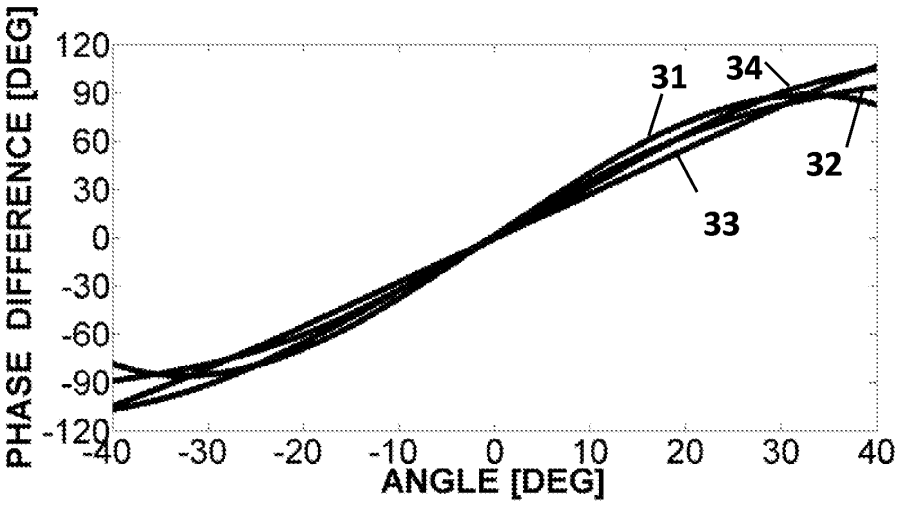
PHASE DIFFERENCE [DEG]
120
90
60
30
0
-30
-60
-90
-120
-40
-30
-20
-10
0
10
20
30
40
ANGLE [DEG]
31
34
32
33

FIG. 3A

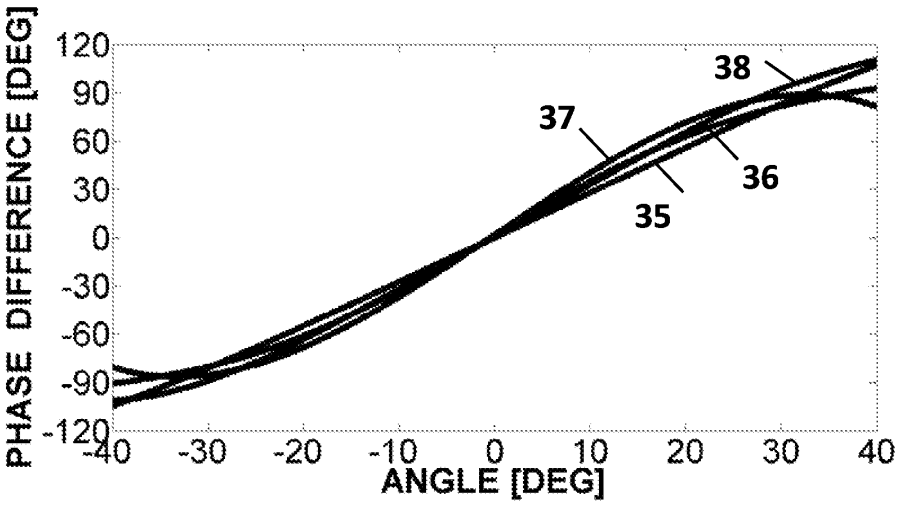
PHASE DIFFERENCE [DEG]
120
90
60
30
0
-30
-60
-90
-120
-40
-30
-20
-10
0
10
20
30
40
ANGLE [DEG]
38
37
36
35

FIG. 3B

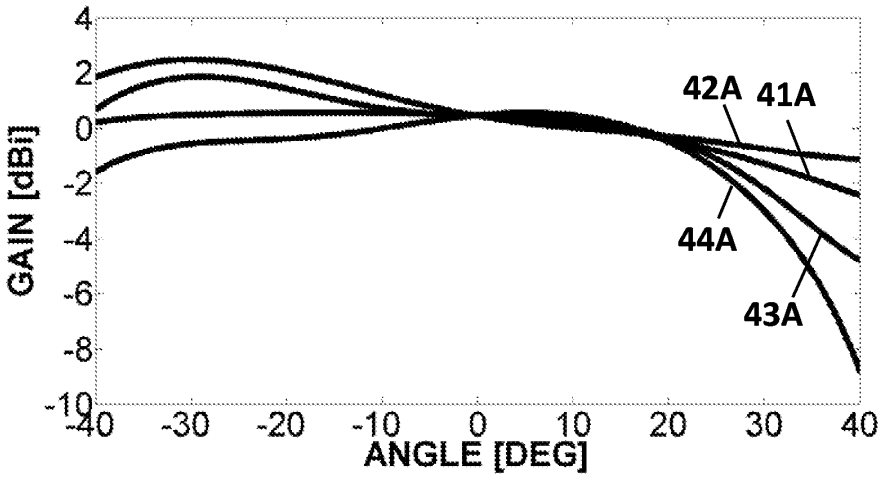
GAIN [dBi]
ANGLE [DEG]
42A
41A
44A
43A

FIG. 4A

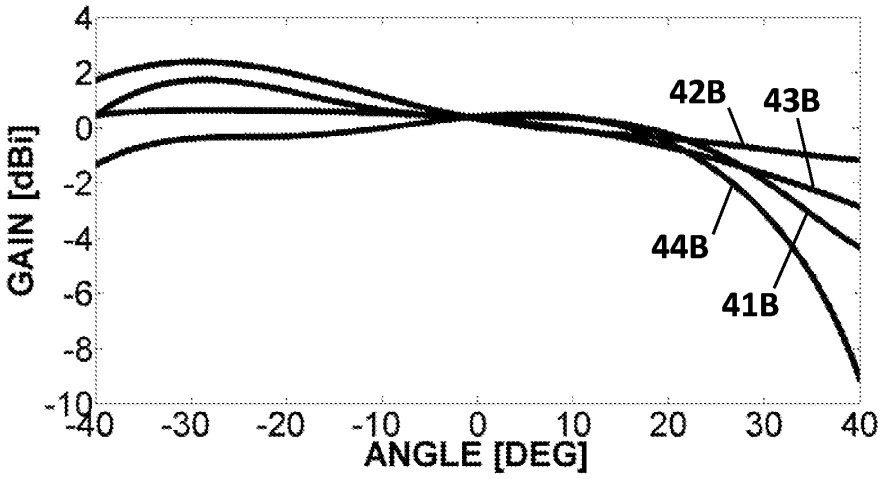
GAIN [dBi]
ANGLE [DEG]
42B
43B
44B
41B

FIG. 4B

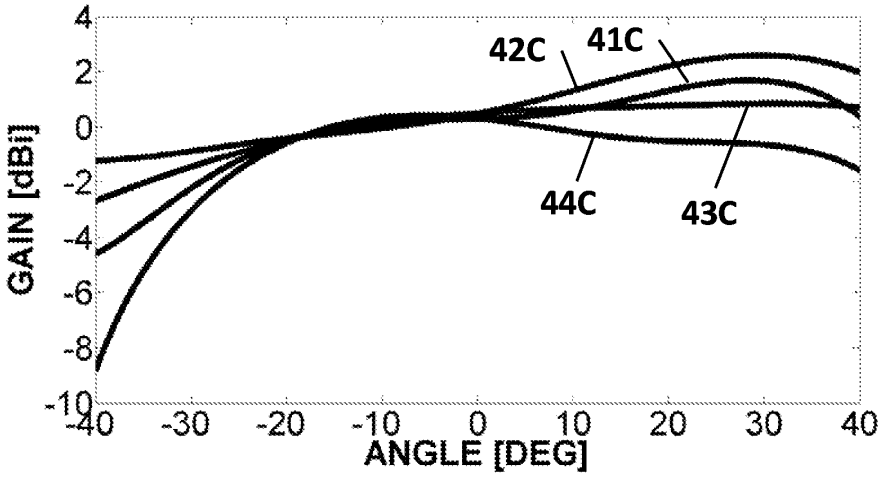
42C
41C
44C
43C
GAIN [dBi]
ANGLE [DEG]
4
2
0
-2
-4
-6
-8
-10
-40
-30
-20
-10
0
10
20
30
40

FIG. 4C

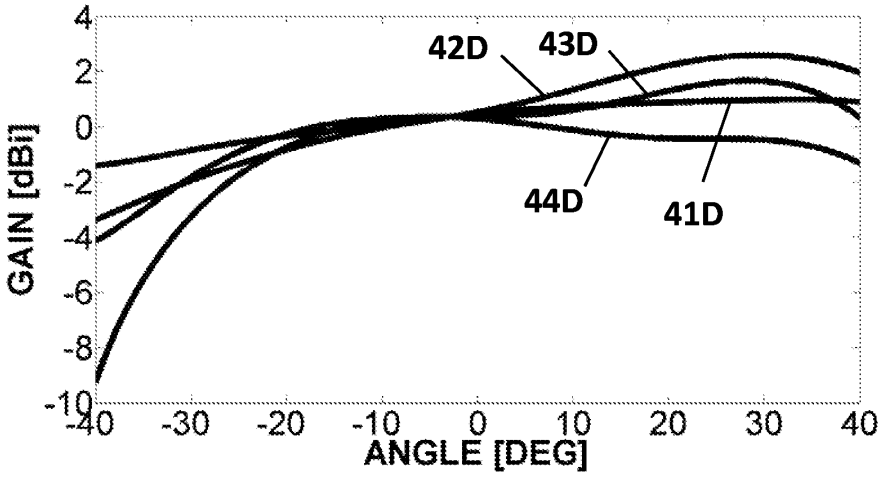
42D
43D
44D
41D
GAIN [dBi]
ANGLE [DEG]
4
2
0
-2
-4
-6
-8
-10
-40
-30
-20
-10
0
10
20
30
40

FIG. 4D

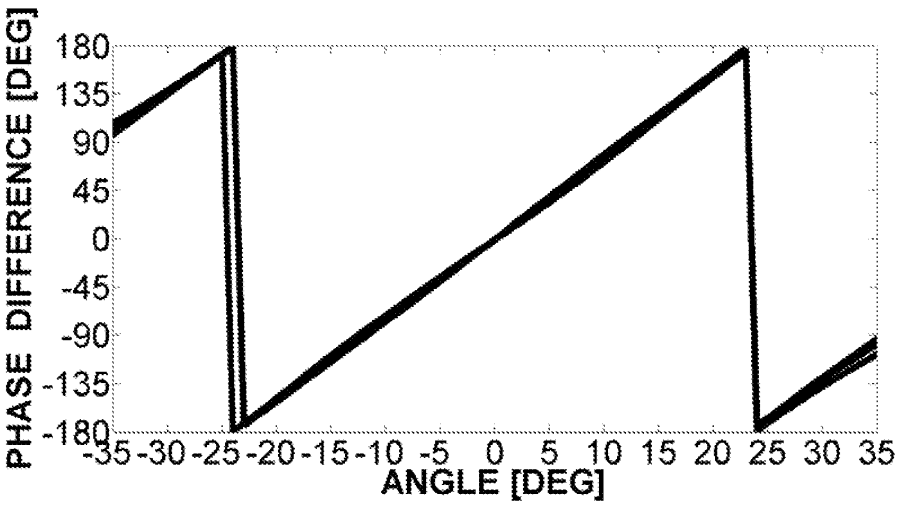
PHASE DIFFERENCE [DEG]
180
135
90
45
0
-45
-90
-135
-180
-35 -30 -25 -20 -15 -10 -5 0 5 10 15 20 25 30 35
ANGLE [DEG]

FIG. 5A

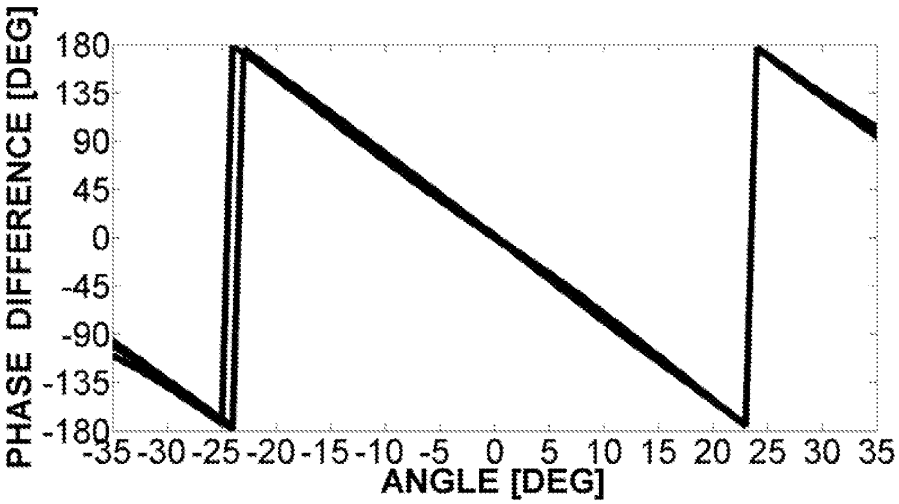
PHASE DIFFERENCE [DEG]
180
135
90
45
0
-45
-90
-135
-180
-35 -30 -25 -20 -15 -10 -5 0 5 10 15 20 25 30 35
ANGLE [DEG]

FIG. 5B

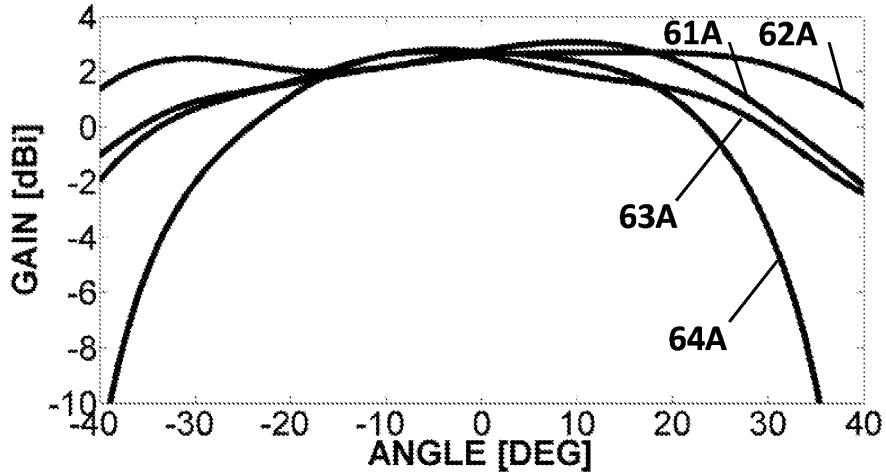
61A
62A
63A
64A
GAIN [dBi]
ANGLE [DEG]
4
2
0
-2
-4
-6
-8
-10
-40
-30
-20
-10
0
10
20
30
40

FIG. 6A

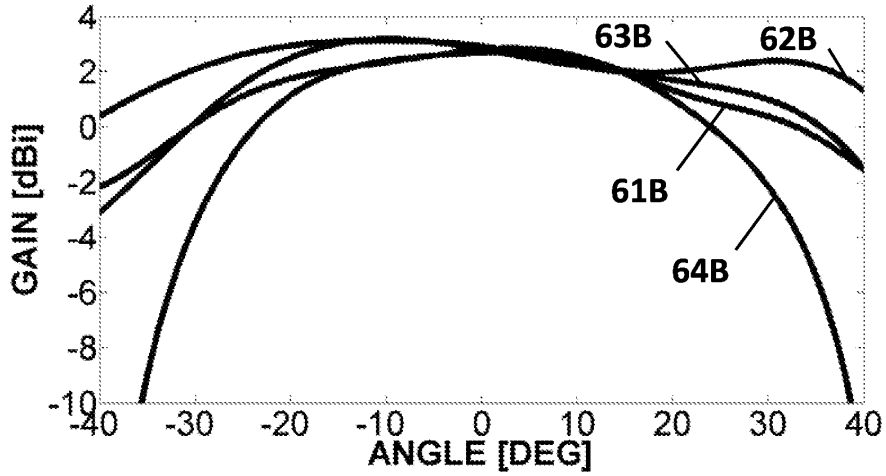
63B
62B
61B
64B
GAIN [dBi]
ANGLE [DEG]
4
2
0
-2
-4
-6
-8
-10
-40
-30
-20
-10
0
10
20
30
40

FIG. 6B

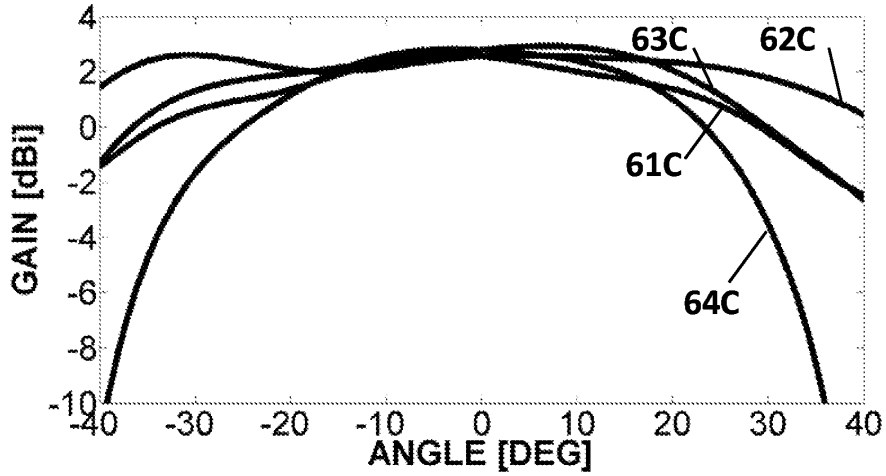
63C
62C
61C
64C
GAIN [dBi]
ANGLE [DEG]
4
2
0
-2
-4
-6
-8
-10
-40
-30
-20
-10
0
10
20
30
40

FIG. 6C

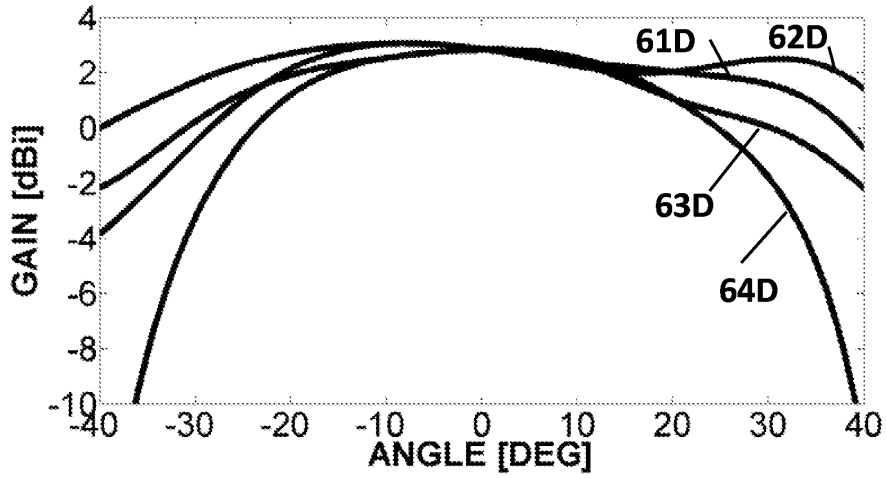
61D
62D
63D
64D
GAIN [dBi]
ANGLE [DEG]
4
2
0
-2
-4
-6
-8
-10
-40
-30
-20
-10
0
10
20
30
40

FIG. 6D

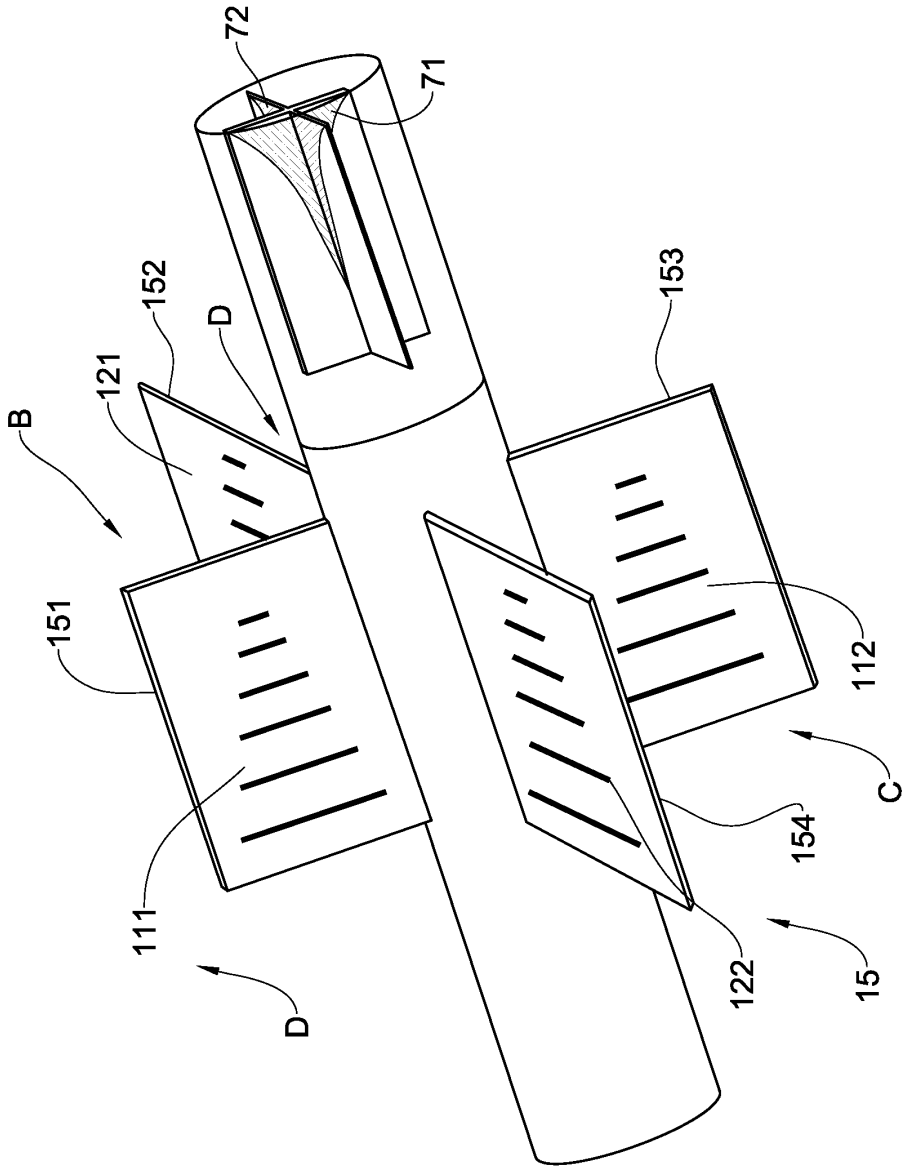

FIG. 7

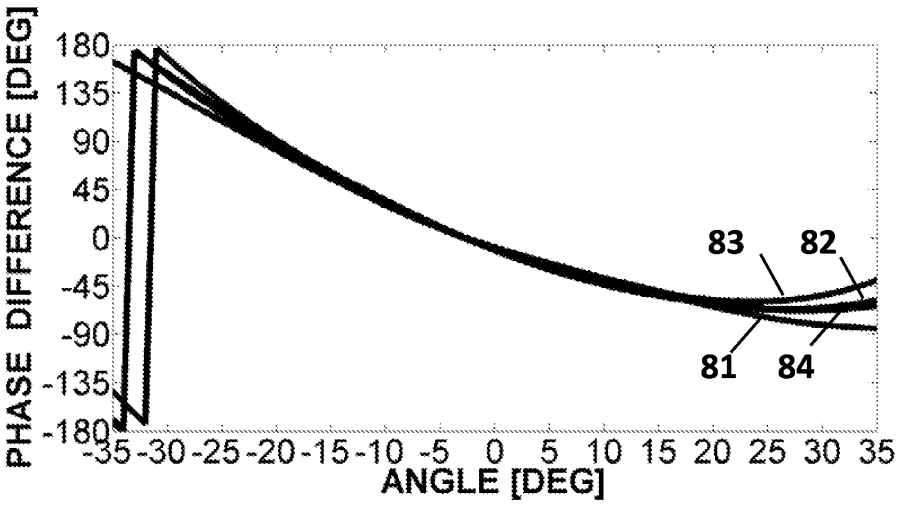
PHASE DIFFERENCE [DEG]
180
135
90
45
0
-45
-90
-135
-180
-35 -30 -25 -20 -15 -10 -5 0 5 10 15 20 25 30 35
ANGLE [DEG]
83
82
81
84

FIG. 8

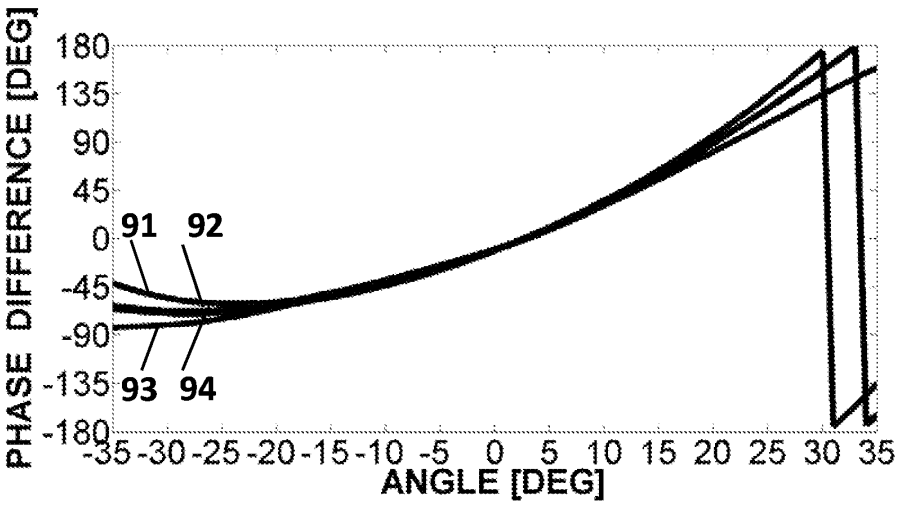
PHASE DIFFERENCE [DEG]
180
135
90
45
0
-45
-90
-135
-180
-35 -30 -25 -20 -15 -10 -5 0 5 10 15 20 25 30 35
ANGLE [DEG]
91
92
93
94

FIG. 9

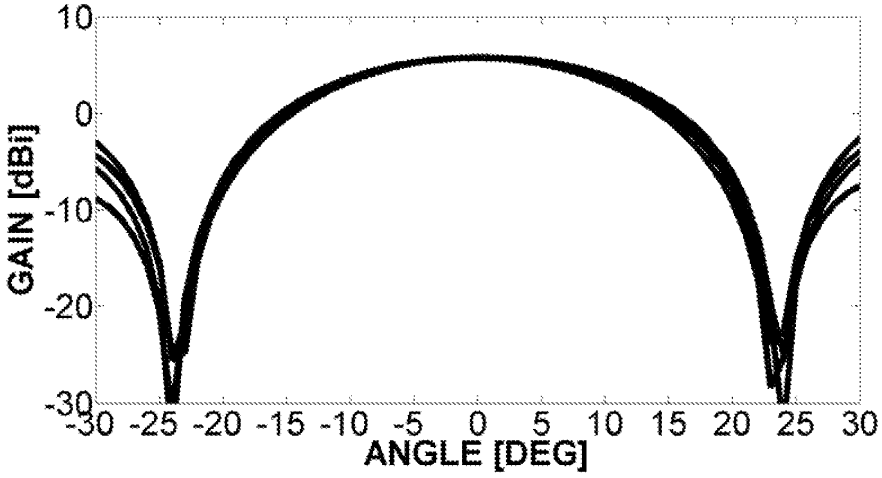
10
0
-10
-20
-30
GAIN [dBi]
-30 -25 -20 -15 -10 -5 0 5 10 15 20 25 30
ANGLE [DEG]

FIG. 10

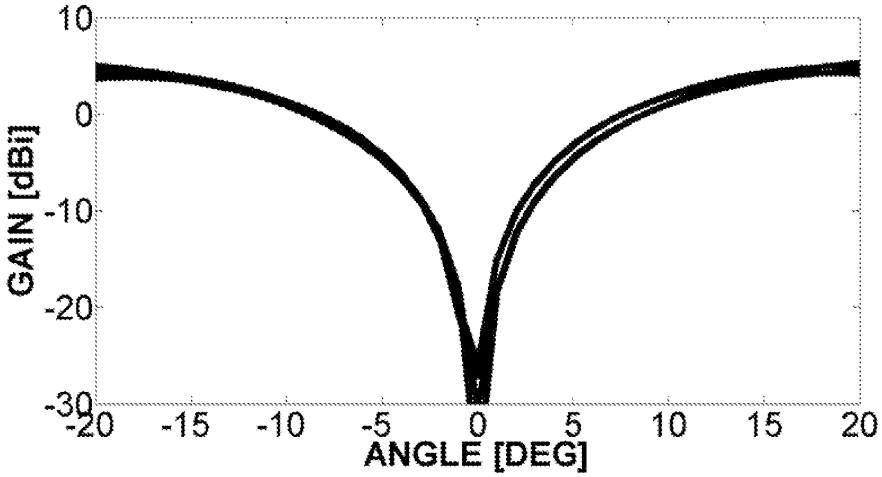
10
0
-10
-20
-30
GAIN [dBi]
-20 -15 -10 -5 0 5 10 15 20
ANGLE [DEG]

FIG. 11

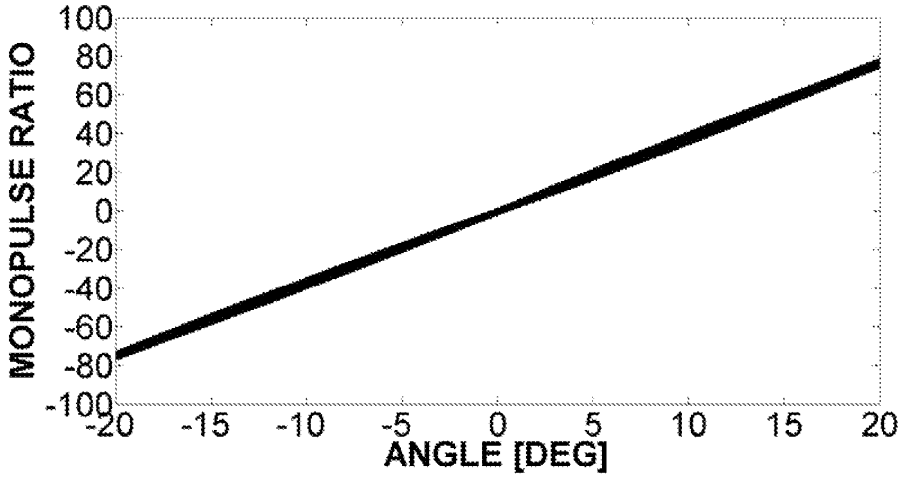
MONOPULSE RATIO
100
80
60
40
20
0
-20
-40
-60
-80
-100
-20
-15
-10
-5
0
5
10
15
20
ANGLE [DEG]

FIG. 12

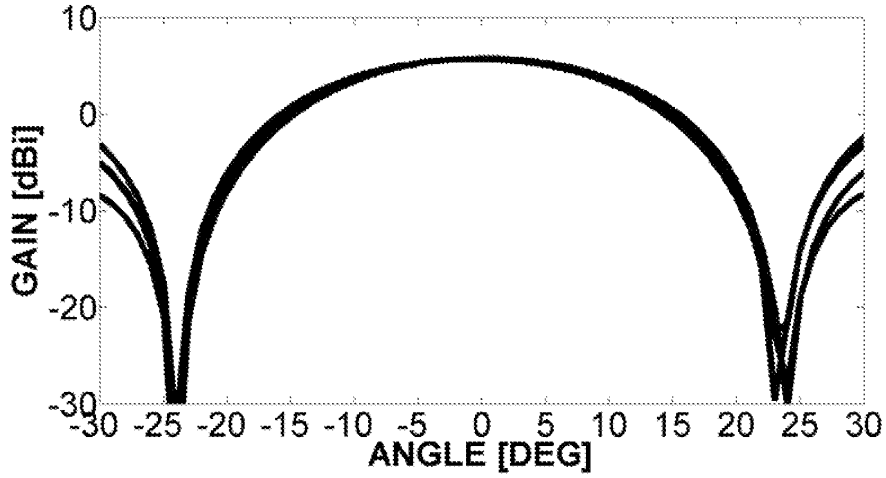
GAIN [dBi]
10
0
-10
-20
-30
-30
-25
-20
-15
-10
-5
0
5
10
15
20
25
30
ANGLE [DEG]

FIG. 13

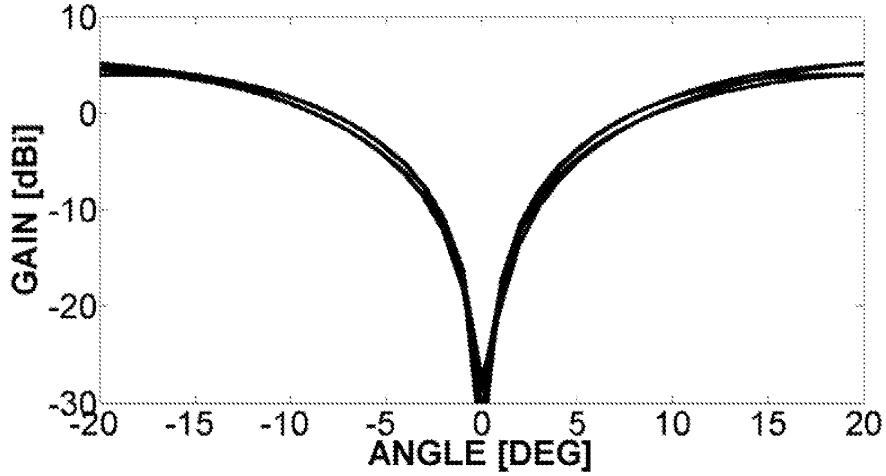
10
0
-10
-20
-30
GAIN [dBi]
-20
-15
-10
-5
0
5
10
15
20
ANGLE [DEG]

FIG. 14

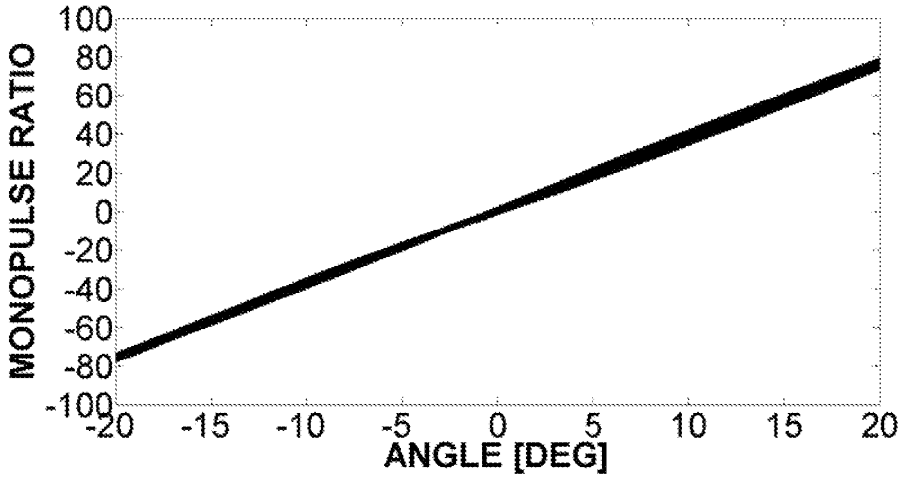
100
80
60
40
20
0
-20
-40
-60
-80
-100
MONOPULSE RATIO
-20
-15
-10
-5
0
5
10
15
20
ANGLE [DEG]

FIG. 15

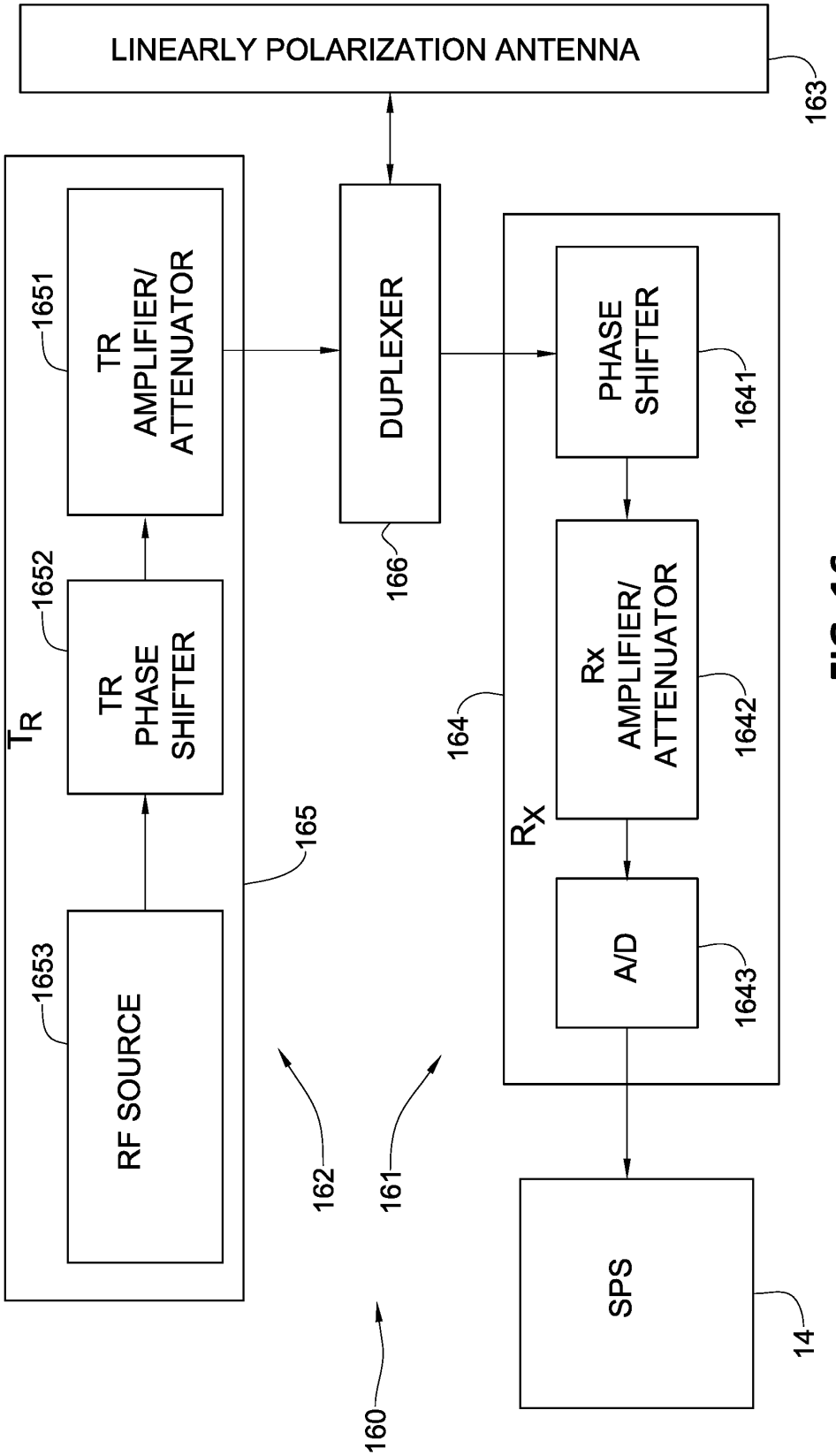
LINEARLY POLARIZATION ANTENNA
163
DUPLEXER
166
TR
AMPLIFIER/
ATTENUATOR
1651
TR
PHASE
SHIFTER
1652
RF SOURCE
1653
TR
165
PHASE
SHIFTER
1641
Rx
AMPLIFIER/
ATTENUATOR
1642
A/D
1643
RX
164
162
161
160
SPS
14

FIG. 16