REPLACEMENT SHEET
19 JUL 2005

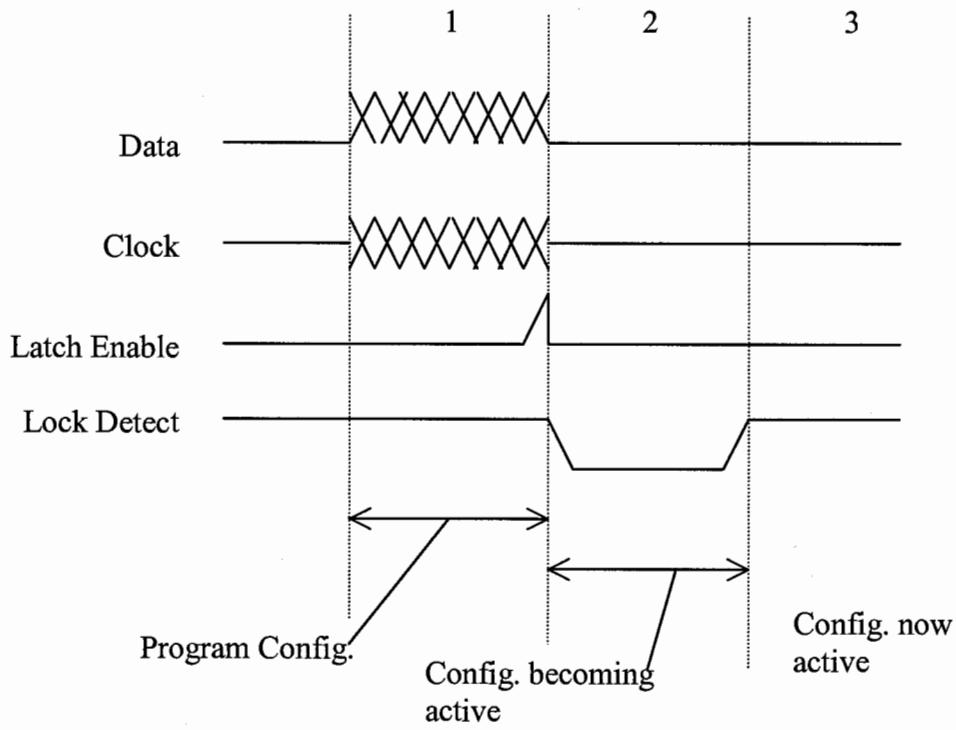

Figure 1

REPLACEMENT SHEET
19 JUL 2005

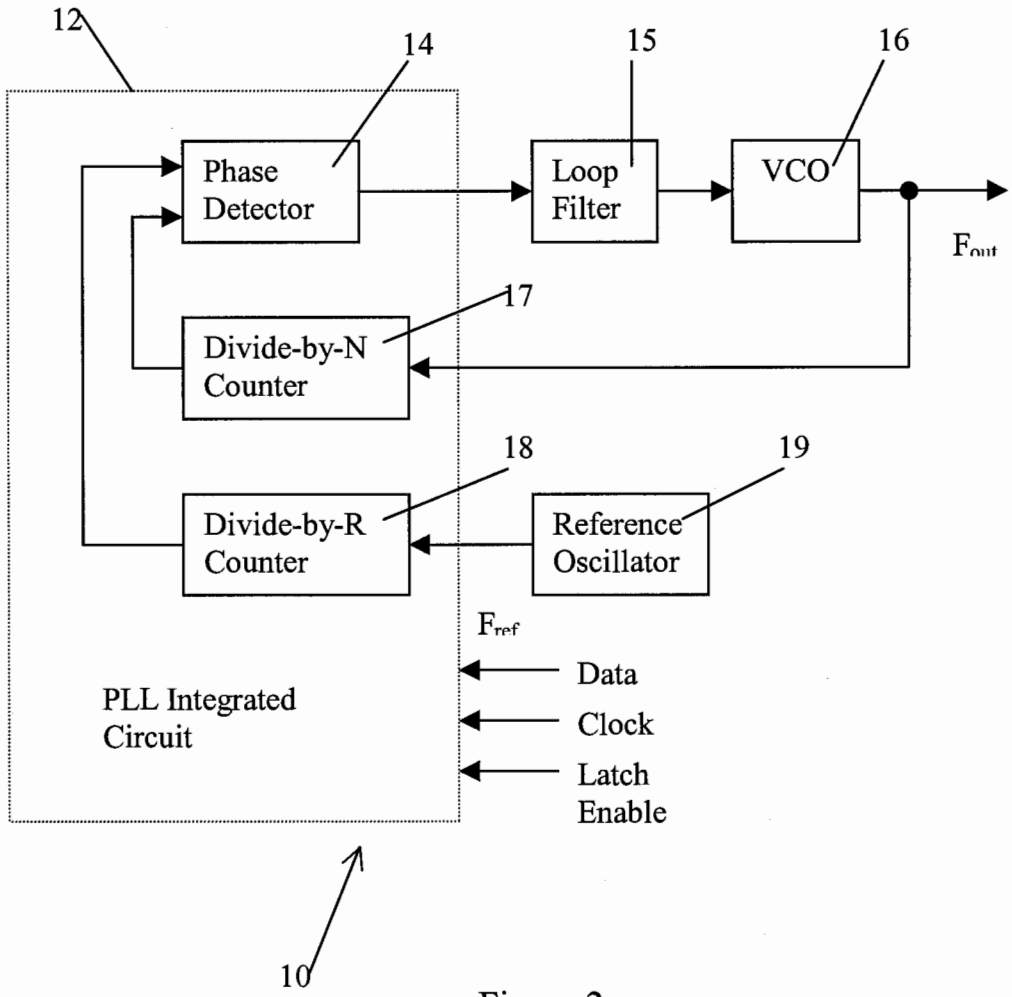

Figure 2

REPLACEMENT SHEET
19 JUL 2005

Figure 3

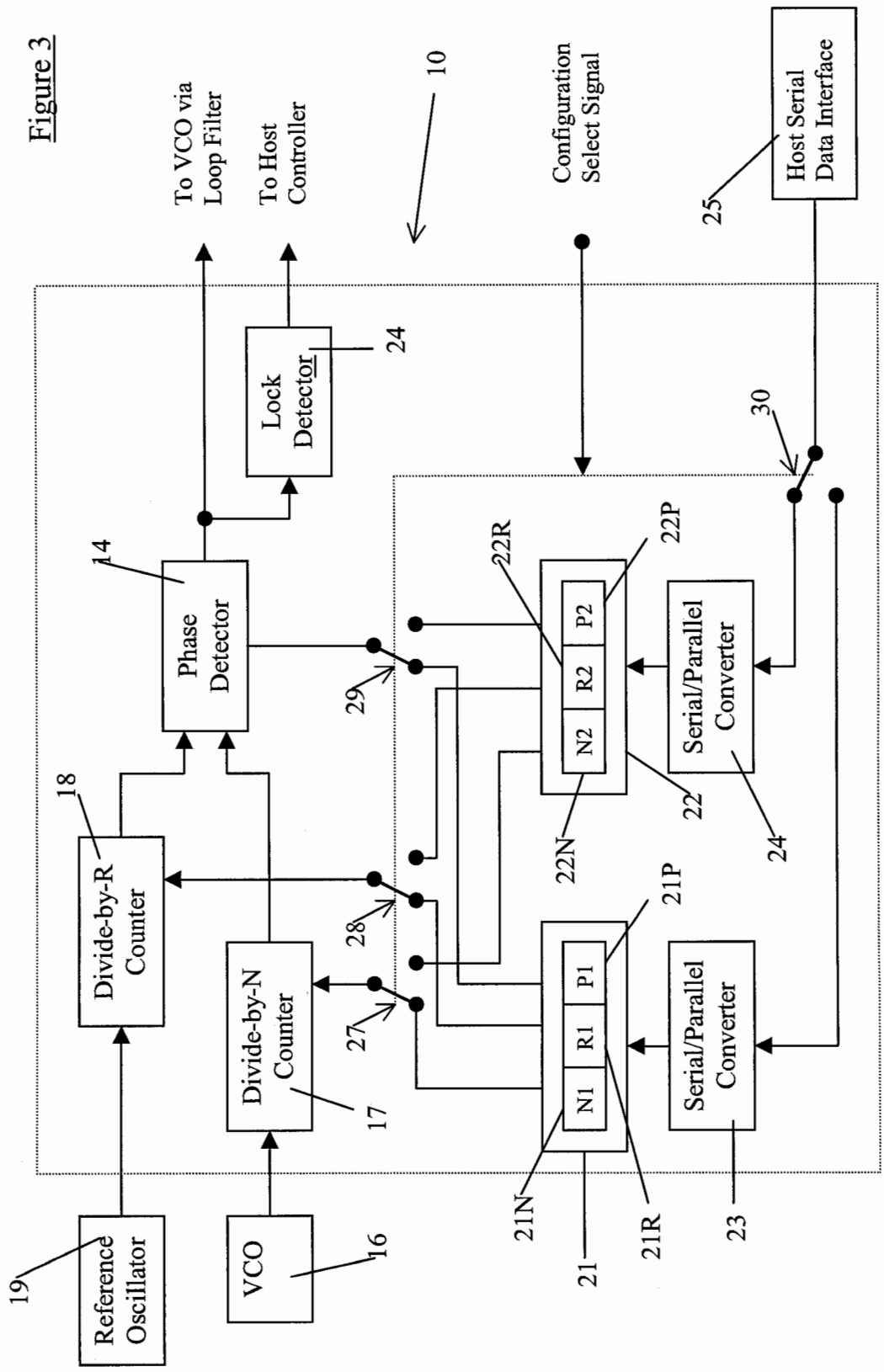

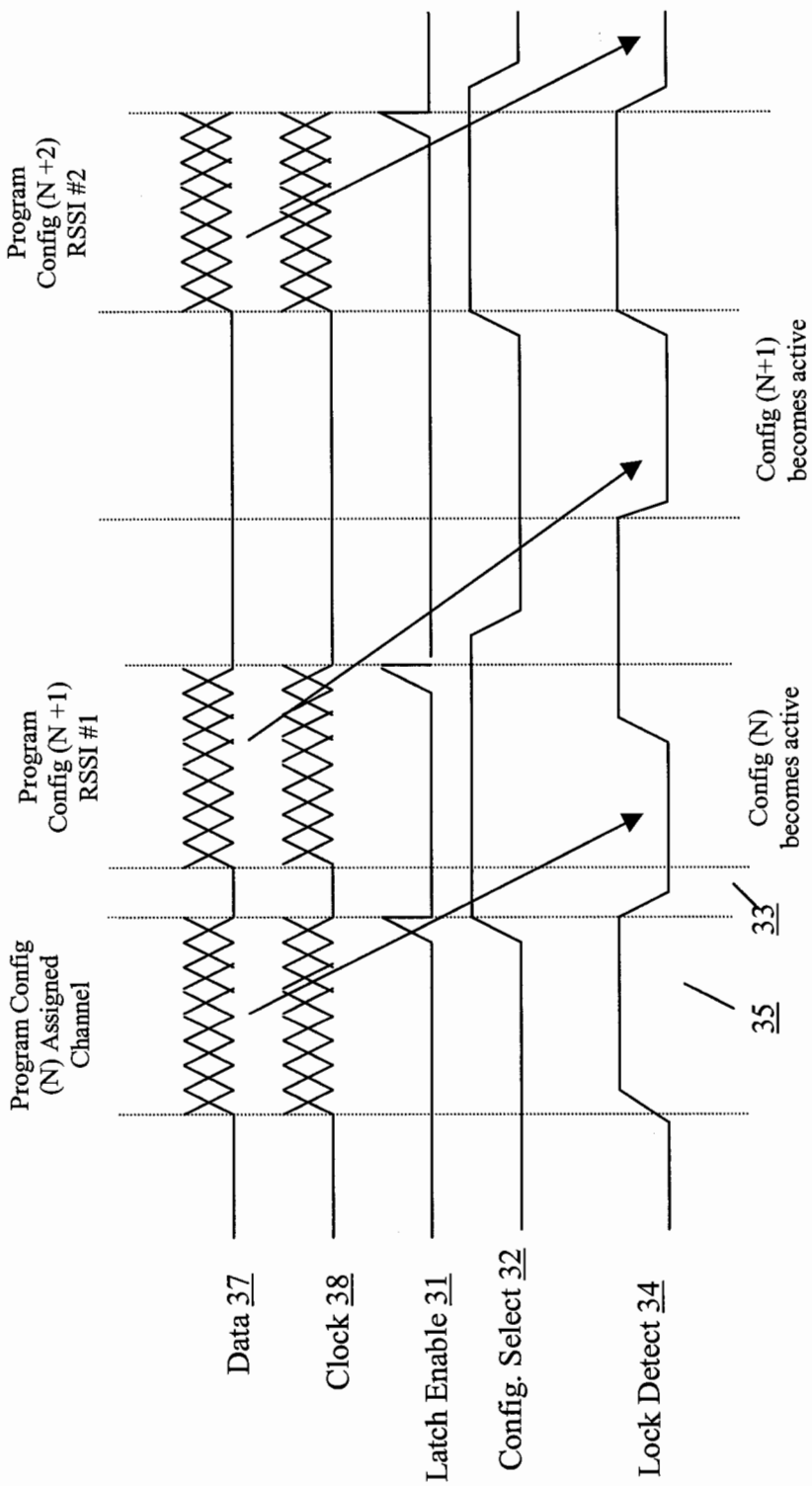
Program Config (N) Assigned Channel
Program Config (N +1) RSSI #1
Program Config (N +2) RSSI #2
Config (N) becomes active
Config (N+1) becomes active
33
35
Data 37
Clock 38
Latch Enable 31
Config. Select 32
Lock Detect 34

Figure 4

REPLACEMENT SHEET
19 JUL 2005

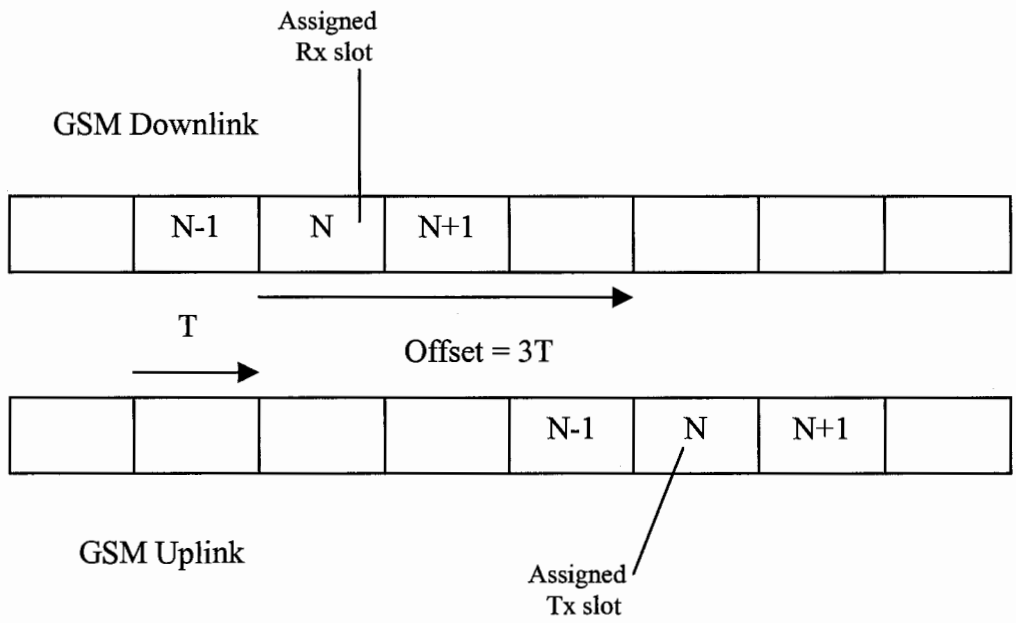

Figure 5

REPLACEMENT SHEET
19 JUL 2005

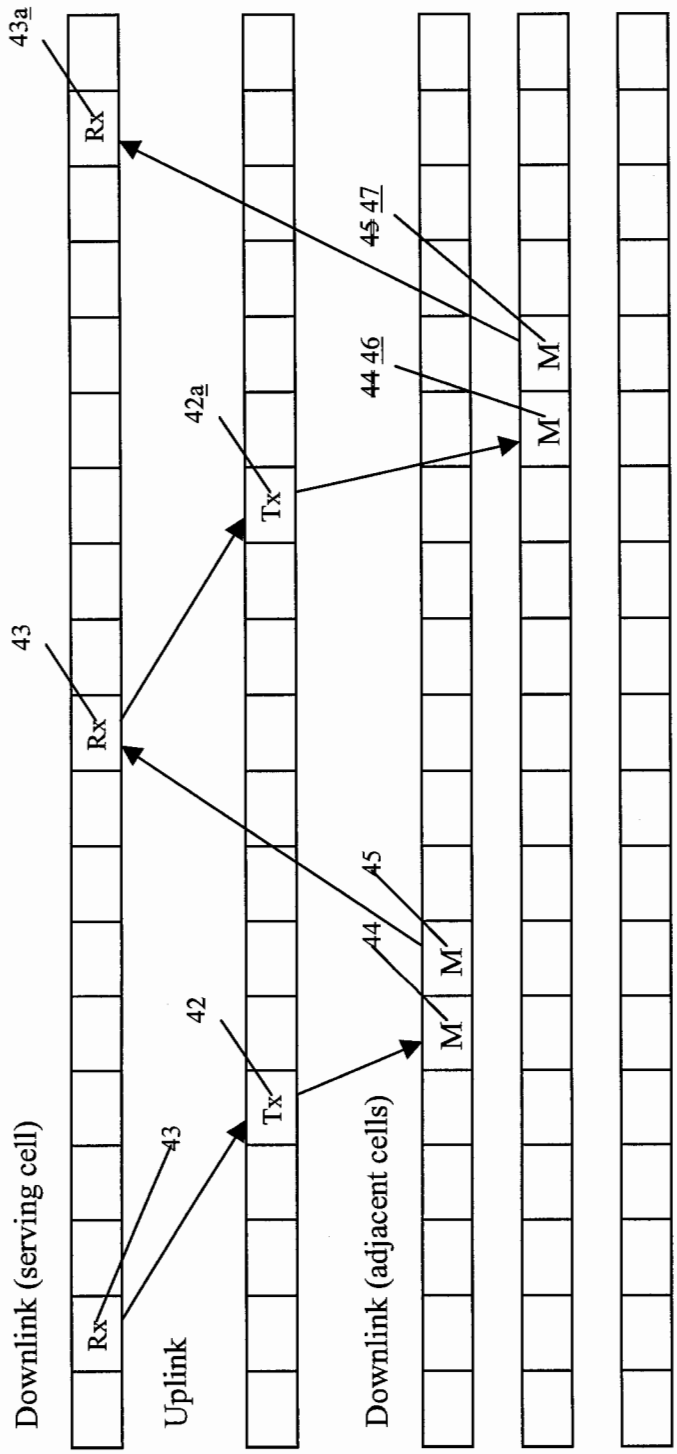

Figure 6

REPLACEMENT SHEET
19 JUL 2005

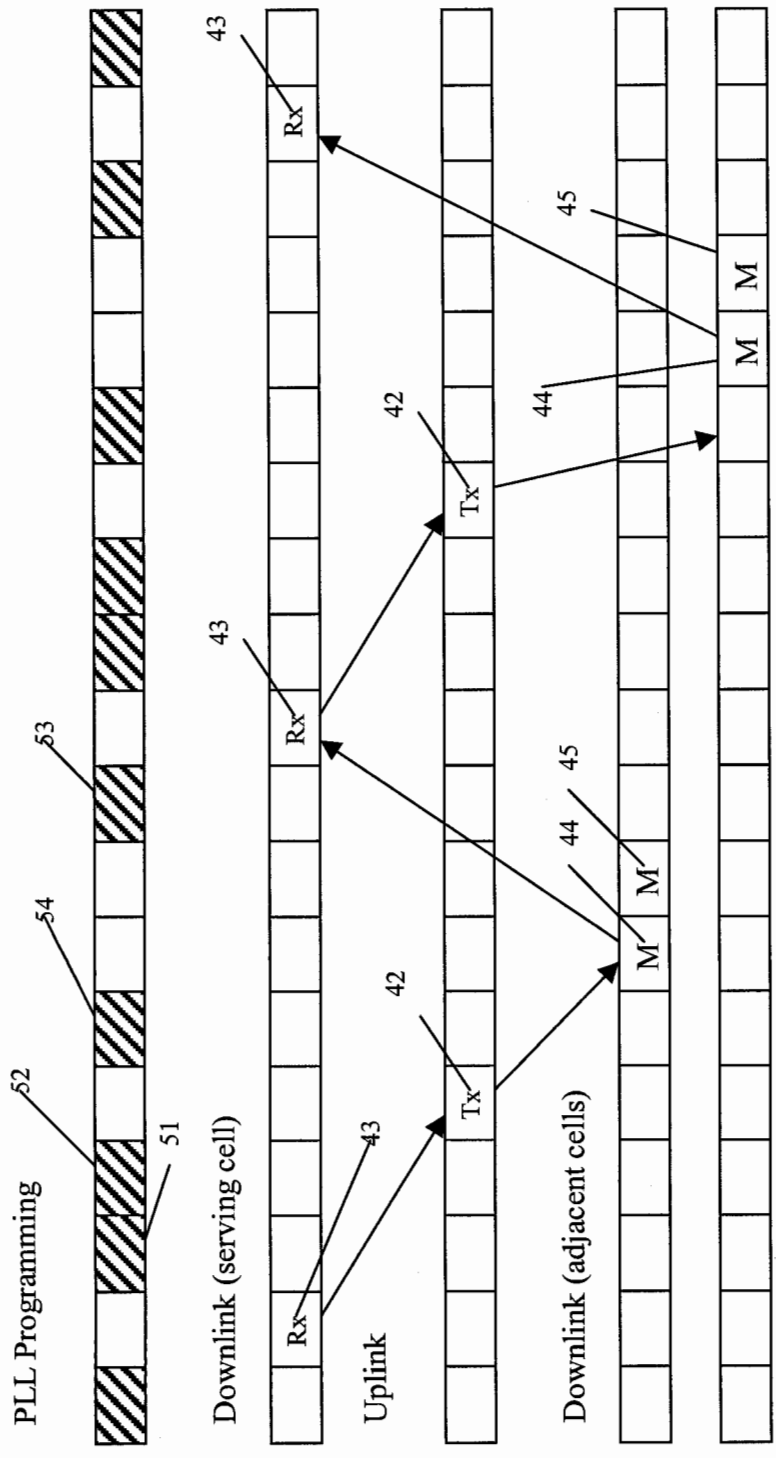

Figure 7

REPLACEMENT SHEET
19 JUL 2005

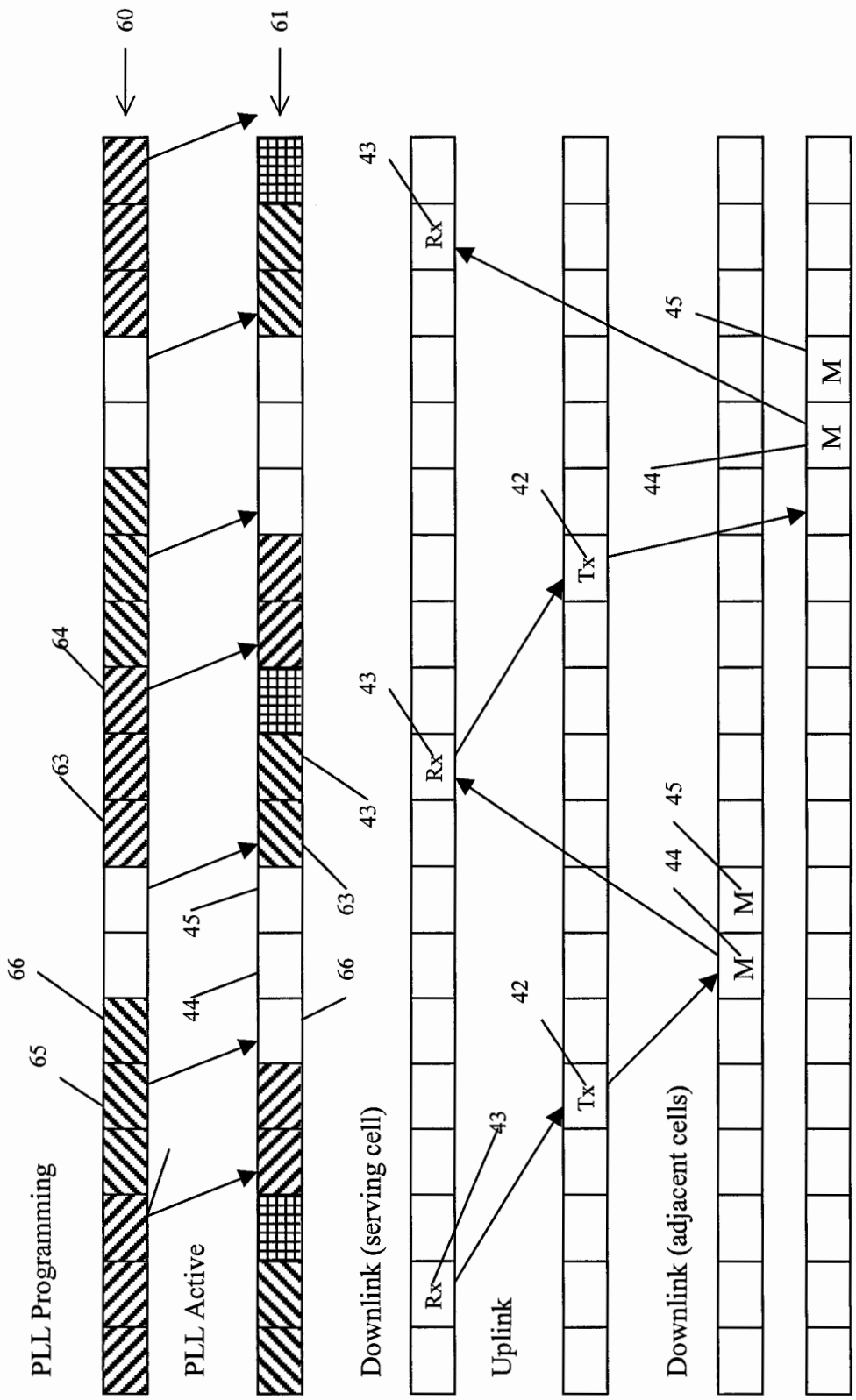

Figure 8

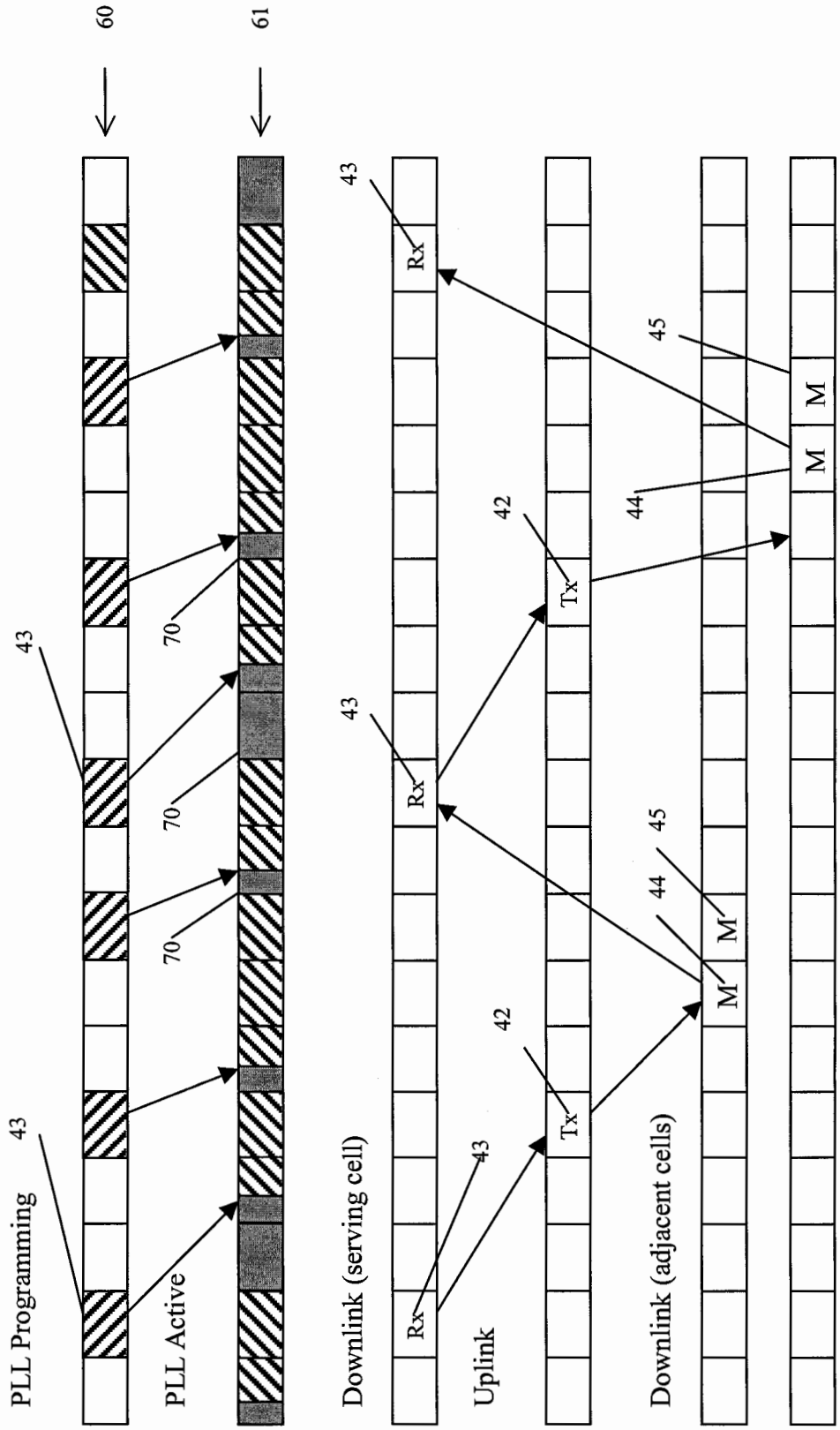
PLL Programming
PLL Active
Downlink (serving cell)
Uplink
Downlink (adjacent cells)
60
61
43
70
42
44
45
Rx
Tx
M

Figure 9