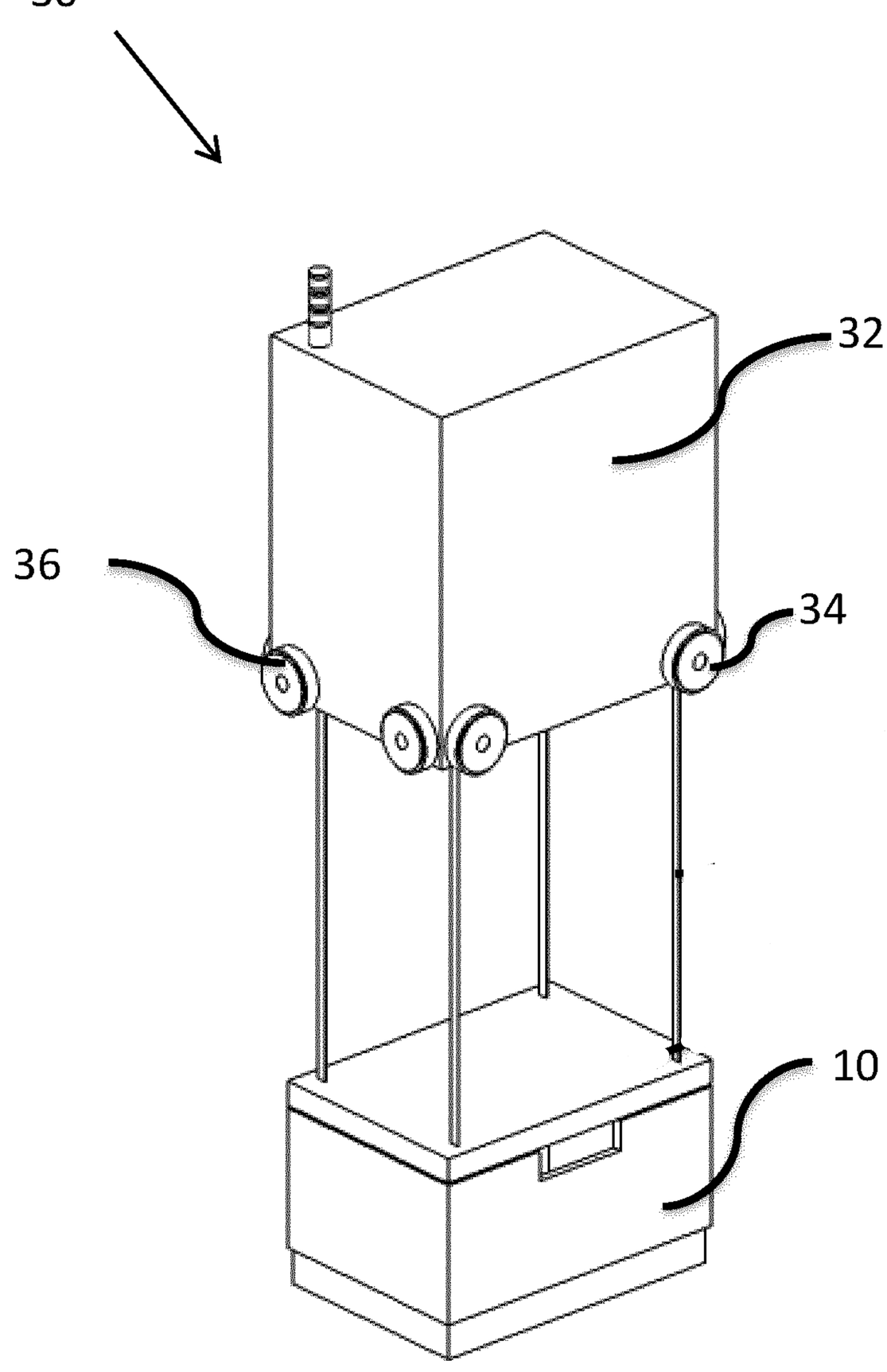

Figure 3a
(PRIOR ART)