REPLACEMENT SHEET
24 SEP 2002



FIG. 1

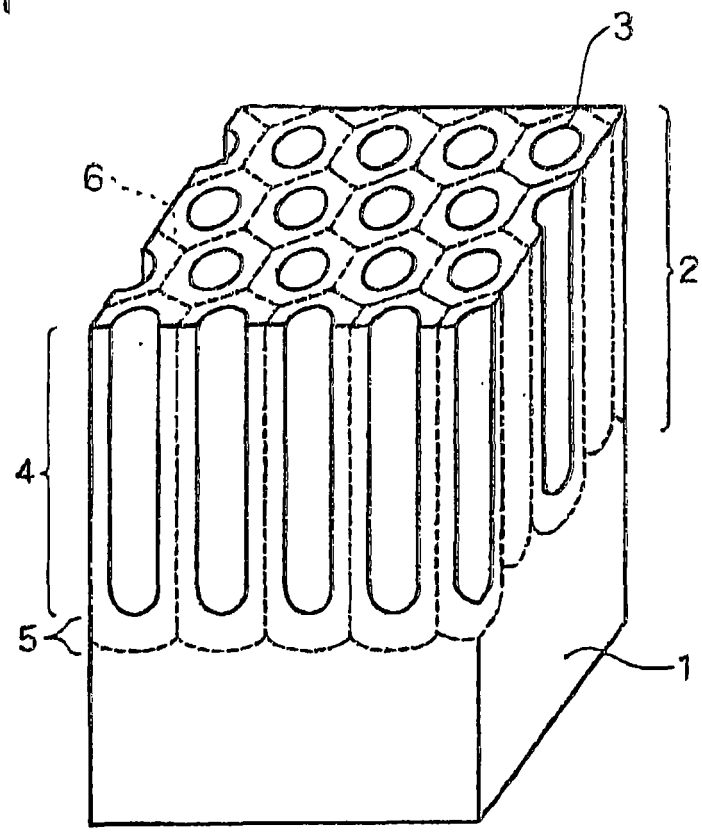


FIG. 2

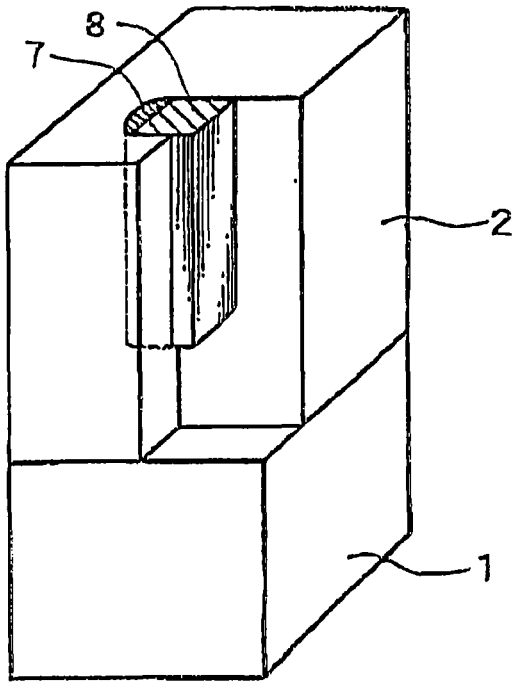


*163163*
*G00002*

FIG. 3

