(12) INTERNATIONAL APPLICATION PUBLISHED UNDER THE PATENT COOPERATION TREATY (PCT)

(19) World Intellectual Property Organization
International Bureau

(43) International Publication Date
23 April 2009 (23.04.2009)

PCT

(10) International Publication Number
WO 2009/051821 A3

(51) International Patent Classification:
B01L 3/00 (2006.01)

(21) International Application Number:
PCT/US2008/011910

(22) International Filing Date:
17 October 2008 (17.10.2008)

(25) Filing Language: English

(26) Publication Language: English

(30) Priority Data:
0720264.1 17 October 2007 (17.10.2007) GB

(71) Applicant *(for all designated States except US)*: **SMITHS DETECTION - WATFORD LIMITED** [GB/GB]; 64 Clarendon Road, Watford, Herts WD17 1DA (GB).

(72) Inventors; and

(75) Inventors/Applicants *(for US only)*: **BETLEY, Jason** [GB/GB]; c/o Smiths Detection - Watford Ltd., 765 Finchley Road, London NW11 8DS (GB). **BOYES, Barry** [CA/GB]; c/o Smiths Detection - Watford Ltd., 765 Finchley Road, London NW11 8DS (GB). **CZAJKA, John, Walter** [US/GB]; c/o Smiths Detection - Watford Ltd., 765 Finchley Road, London NW11 8DS (GB). **FAIRS, Michael, Roy** [GB/GB]; c/o Smiths Detection - Watford Ltd., 765 Finchley Road, London NW11 8DS (GB). **FEWSTER, Colin** [GB/GB]; c/o Smiths Detection - Watford Ltd., 765 Finchley Road, London NW11 8DS (GB). **FORD, Thomas, David** [GB/GB]; c/o Smiths Detection - Watford Ltd., 765 Finchley Road, London NW11 8DS (GB). **GREEN, Douglas, Jason** [US/GB]; c/o Smiths Detection - Watford Ltd., 765 Finchley Road, London NW11 8DS (GB). **HARDING, Piers Sebastian** [GB/GB]; c/o Smiths Detection - Watford Ltd., 765 Finchley Road, London NW11 8DS (GB). **HOWARD, Gary, Stephen** [GB/GB]; c/o Smiths Detection - Watford Ltd., 765 Finchley Road, London NW11 8DS (GB). **LEWINGTON, Jay** [GB/GB]; c/o Smiths Detection - Watford Ltd., 765 Finchley Road, London NW11 8DS (GB). **MAWER, William, Richard** [GB/GB]; c/o Smiths

[Continued on next page]

(54) Title: SAMPLE PREPARATION DEVICES AND ANALYZERS

(57) Abstract: The application provides sample preparation devices and analyses. The devices and analyzes allow for the rapid preparation and analysis of samples using a variety of techniques, including PCR, by even unskilled users.

Fig. 1

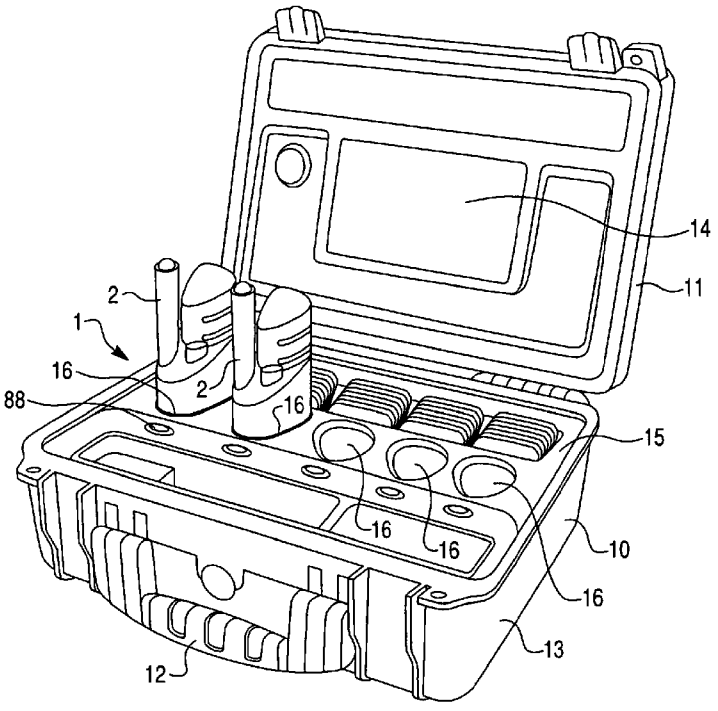

WO 2009/051821 A3

Detection - Watford Ltd., 765 Finchley Road, London NW11 8DS (GB). **MILLS, Catherine** [GB/GB]; c/o Smiths Detection - Watford Ltd., 765 Finchley Road, London NW11 8DS (GB). **ONSLOW, James** [GB/GB]; c/o Smiths Detection - Watford Ltd., 765 Finchley Road, London NW11 8DS (GB). **VOLPE, Carmelo** [GB/GB]; c/o Smiths Detection - Watford Ltd., 765 Finchley Road, London NW11 8DS (GB).

(74) **Agents**: **KAMINSKI, Michael, D.** et al.; Foley & Lardner LLP, Washington Harbour, 3000 K Street NW, Suite 500, Washington, DC 20007-5143 (US).

(81) **Designated States** *(unless otherwise indicated, for every kind of national protection available)*: AE, AG, AL, AM, AO, AT, AU, AZ, BA, BB, BG, BH, BR, BW, BY, BZ, CA, CH, CN, CO, CR, CU, CZ, DE, DK, DM, DO, DZ, EC, EE, EG, ES, FI, GB, GD, GE, GH, GM, GT, HN, HR, HU, ID, IL, IN, IS, JP, KE, KG, KM, KN, KP, KR, KZ, LA, LC, LK, LR, LS, LT, LU, LY, MA, MD, ME, MG, MK, MN, MW, MX, MY, MZ, NA, NG, NI, NO, NZ, OM, PG, PH, PL, PT, RO, RS, RU, SC, SD, SE, SG, SK, SL, SM, ST, SV, SY, TJ, TM, TN, TR, TT, TZ, UA, UG, US, UZ, VC, VN, ZA, ZM, ZW.

(84) **Designated States** *(unless otherwise indicated, for every kind of regional protection available)*: ARIPO (BW, GH, GM, KE, LS, MW, MZ, NA, SD, SL, SZ, TZ, UG, ZM, ZW), Eurasian (AM, AZ, BY, KG, KZ, MD, RU, TJ, TM), European (AT, BE, BG, CH, CY, CZ, DE, DK, EE, ES, FI, FR, GB, GR, HR, HU, IE, IS, IT, LT, LU, LV, MC, MT, NL, NO, PL, PT, RO, SE, SI, SK, TR), OAPI (BF, BJ, CF, CG, CI, CM, GA, GN, GQ, GW, ML, MR, NE, SN, TD, TG).

Published:

— *with international search report (Art. 21(3))*

— *before the expiration of the time limit for amending the claims and to be republished in the event of receipt of amendments (Rule 48.2(h))*

(88) **Date of publication of the international search report**:
3 September 2009