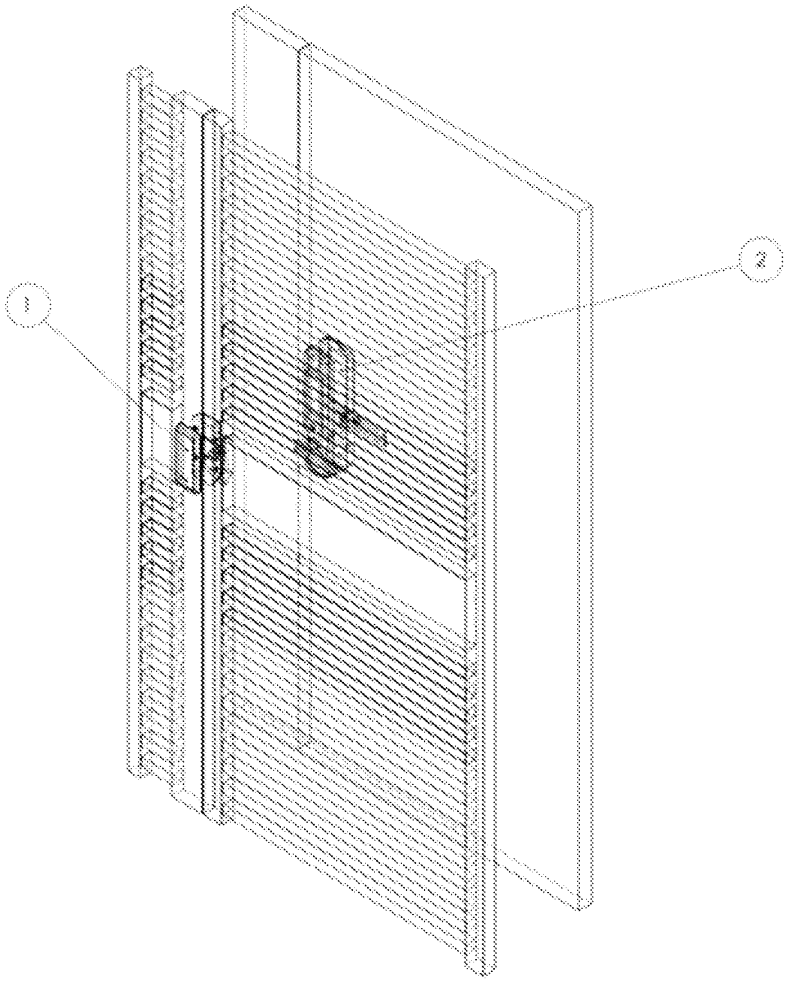


FIG. 1

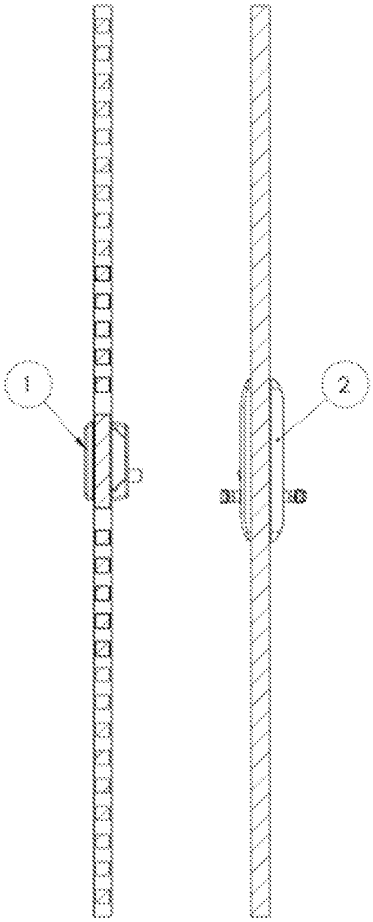


FIG. 2

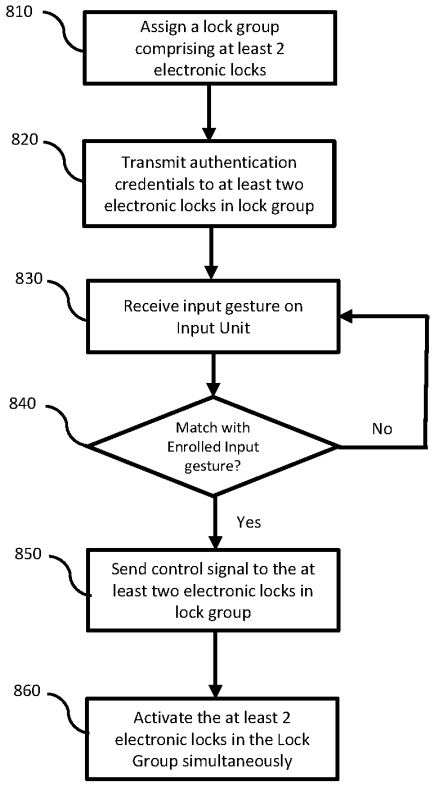
810
Assign a lock group comprising at least 2 electronic locks
820
Transmit authentication credentials to at least two electronic locks in lock group
830
Receive input gesture on Input Unit
840
Match with Enrolled Input gesture?
No
Yes
850
Send control signal to the at least two electronic locks in lock group
860
Activate the at least 2 electronic locks in the Lock Group simultaneously

FIG. 3

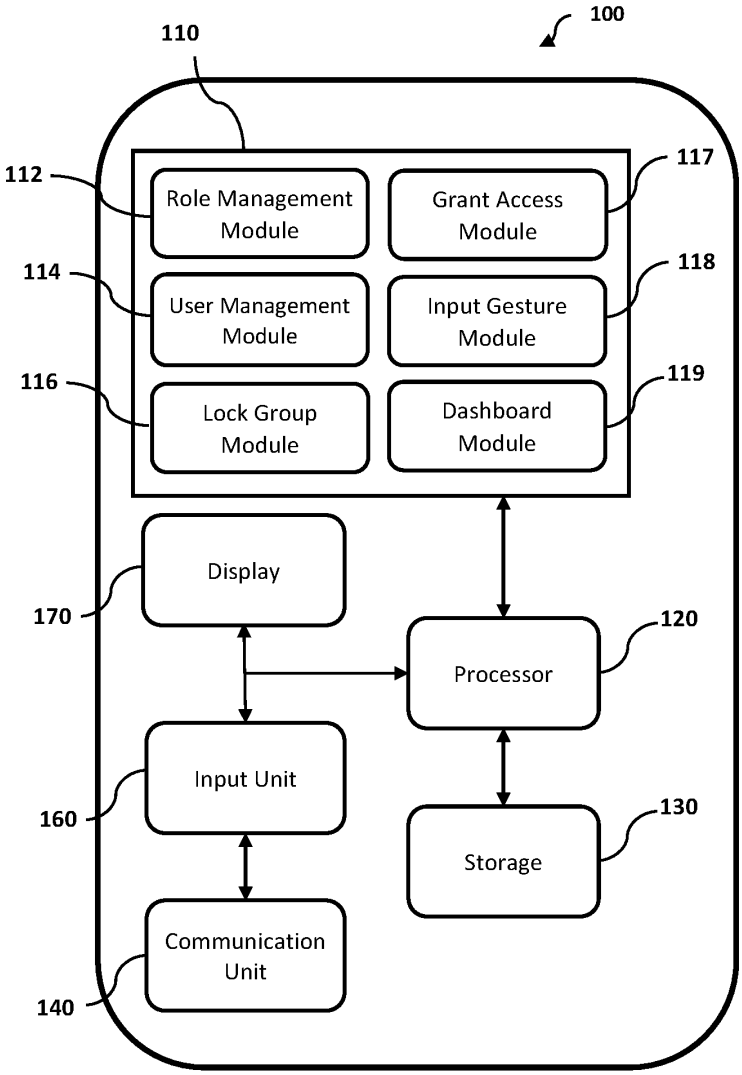
100
110
112
Role Management Module
117
Grant Access Module
114
User Management Module
118
Input Gesture Module
116
Lock Group Module
119
Dashboard Module
Display
170
Processor
120
Input Unit
160
Storage
130
Communication Unit
140

FIG. 4

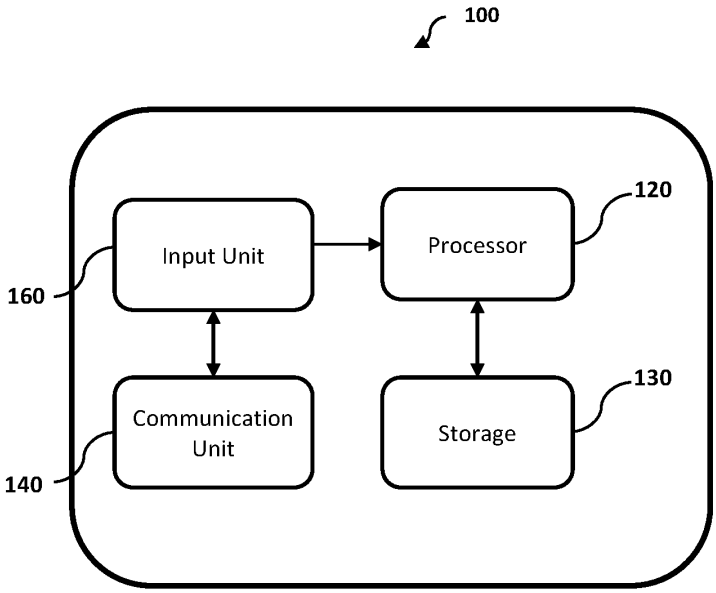
100
Input Unit
Processor
120
160
Communication Unit
Storage
130
140

FIG. 5

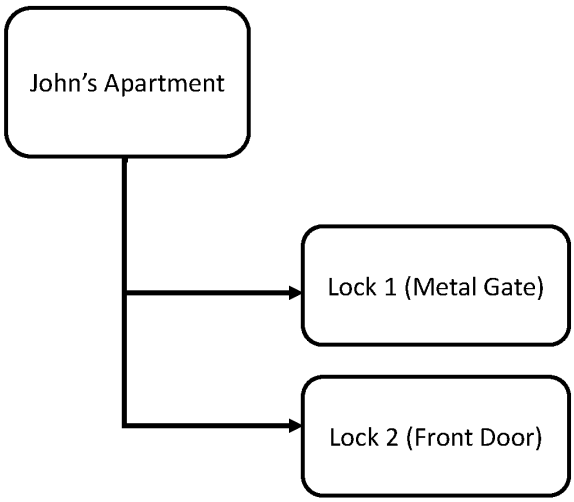
John's Apartment
Lock 1 (Metal Gate)
Lock 2 (Front Door)

FIG. 6(a)

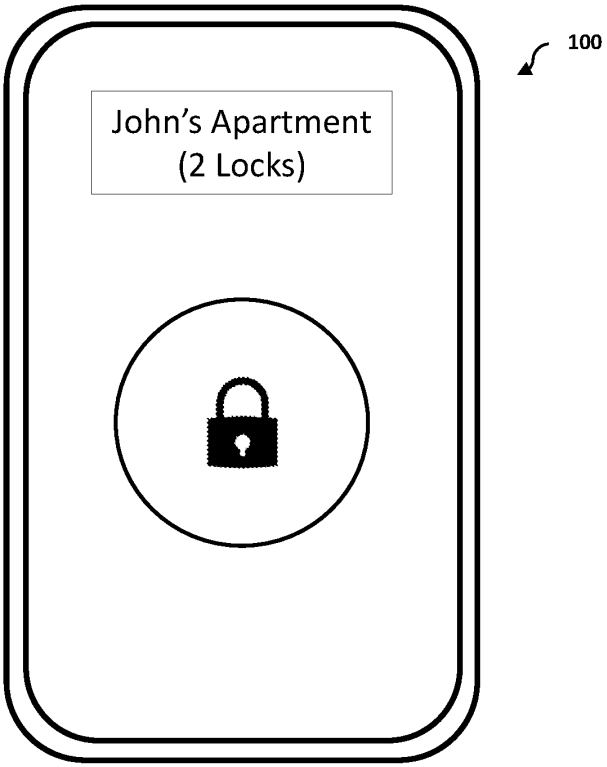
100
John's Apartment
(2 Locks)

FIG. 6(b)

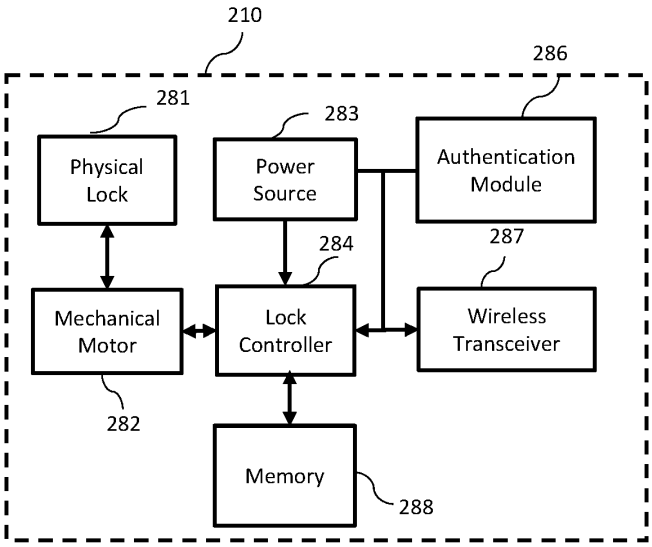
210
286
281
283
Physical Lock
Power Source
Authentication Module
284
287
Mechanical Motor
Lock Controller
Wireless Transceiver
282
Memory
288

FIG. 7

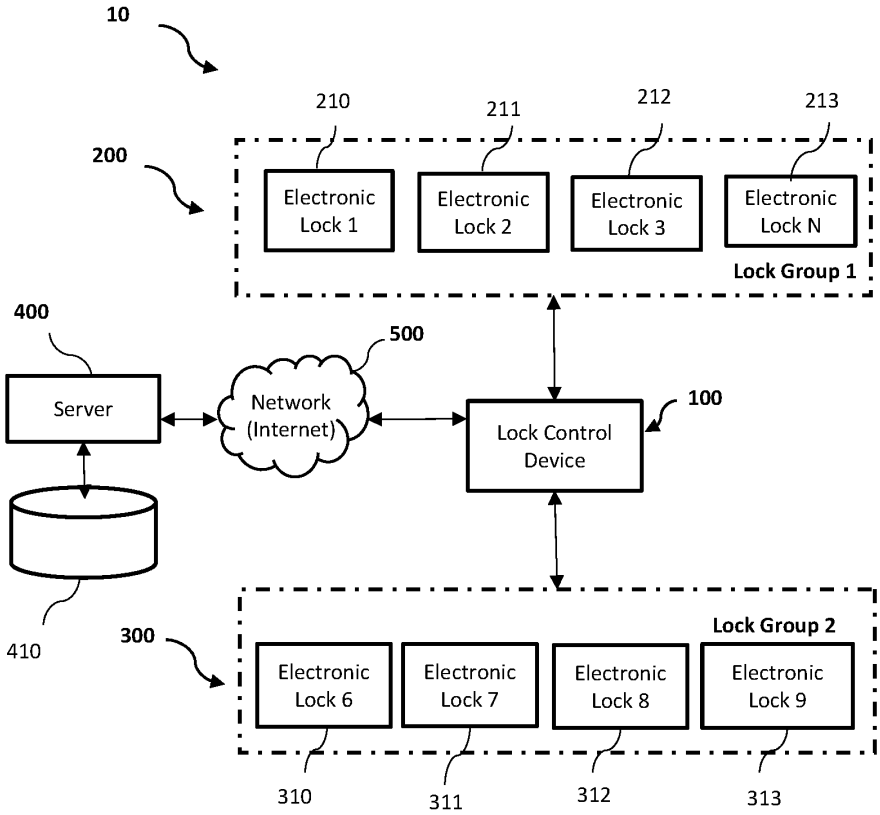
10
200
210
211
212
213
Electronic Lock 1
Electronic Lock 2
Electronic Lock 3
Electronic Lock N
Lock Group 1
400
500
Server
Network (Internet)
Lock Control Device
100
410
300
Lock Group 2
Electronic Lock 6
Electronic Lock 7
Electronic Lock 8
Electronic Lock 9
310
311
312
313

FIG. 8

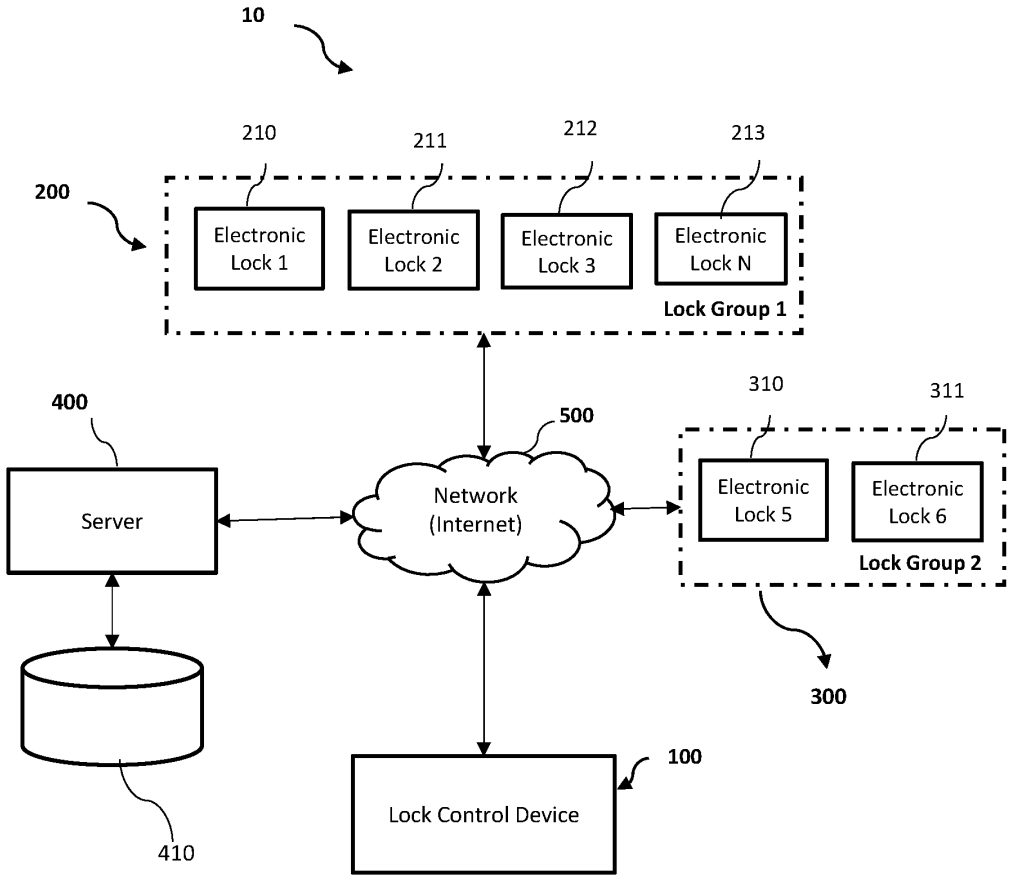
10
210
211
212
213
200
Electronic Lock 1
Electronic Lock 2
Electronic Lock 3
Electronic Lock N
Lock Group 1
400
500
310
311
Server
Network (Internet)
Electronic Lock 5
Electronic Lock 6
Lock Group 2
300
100
Lock Control Device
410

FIG. 9

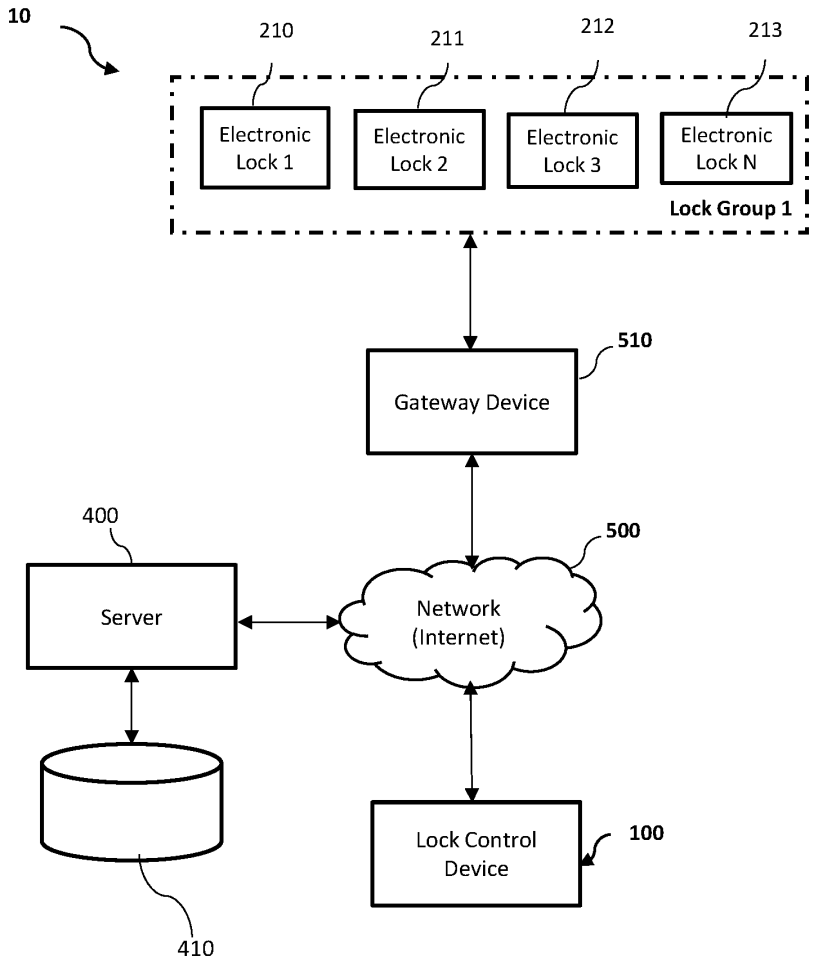
10
210
211
212
213
Electronic Lock 1
Electronic Lock 2
Electronic Lock 3
Electronic Lock N
Lock Group 1
510
Gateway Device
400
500
Server
Network (Internet)
Lock Control Device
100
410

FIG. 10