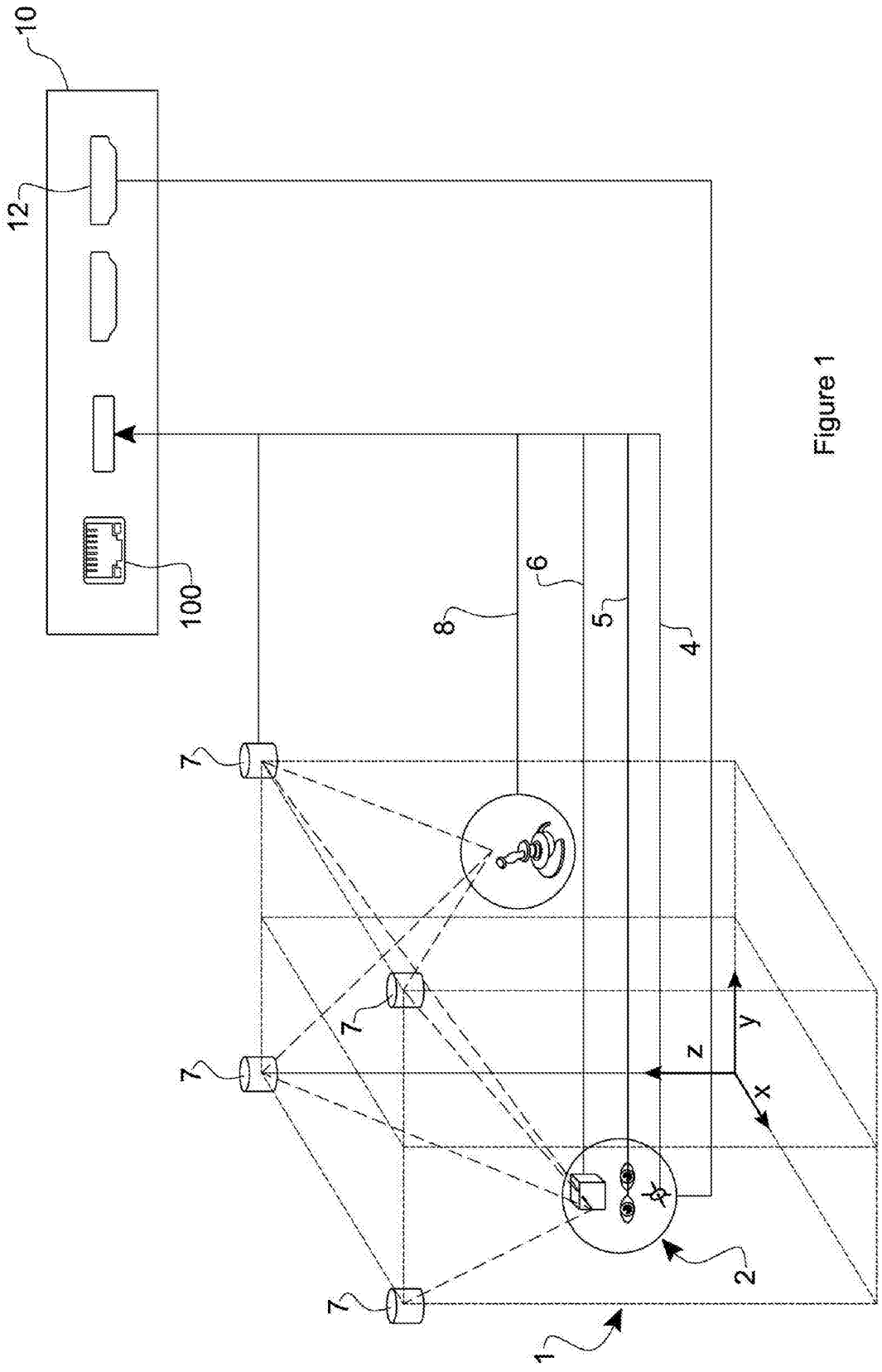

Figure 1

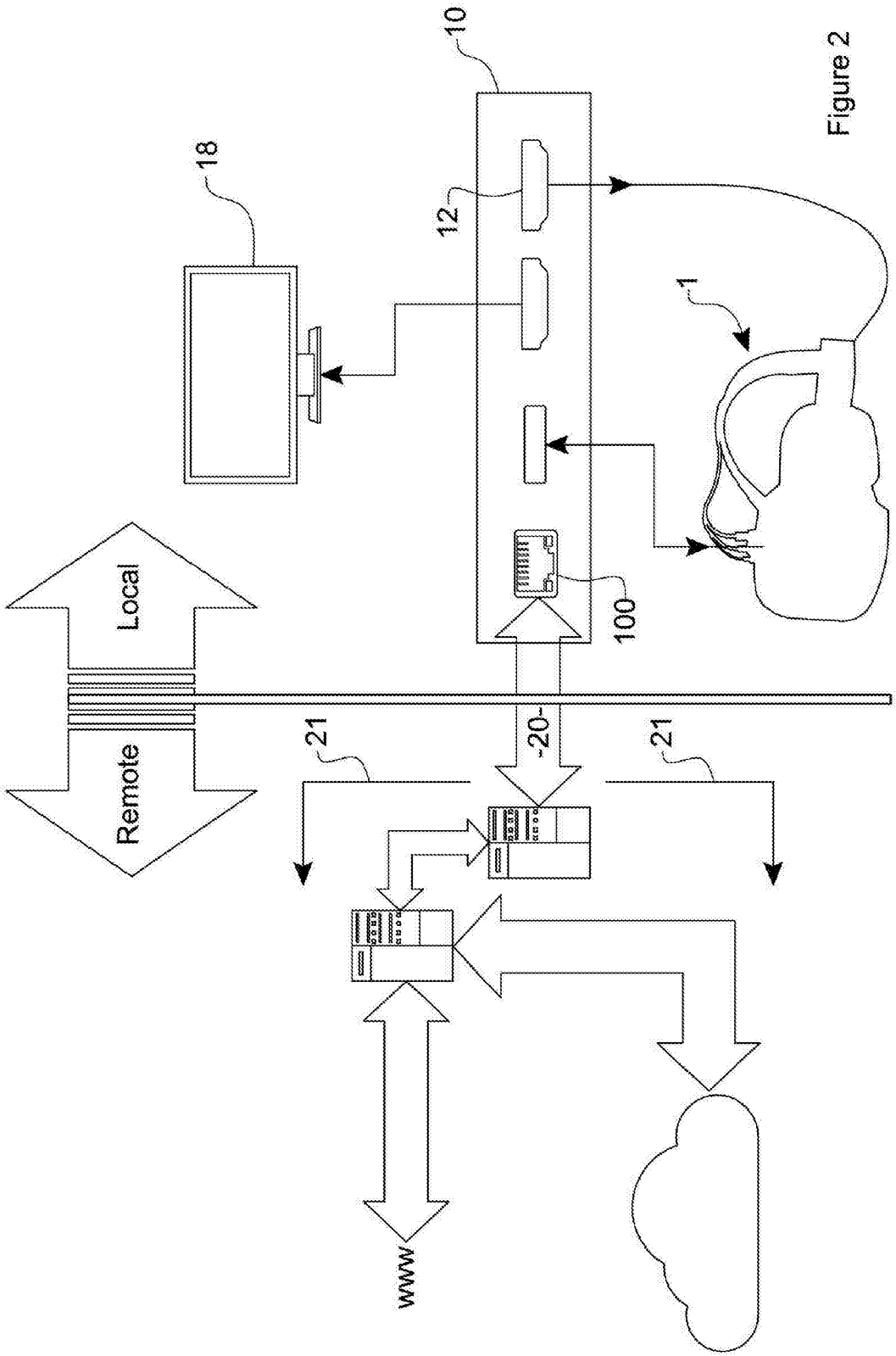

Figure 2

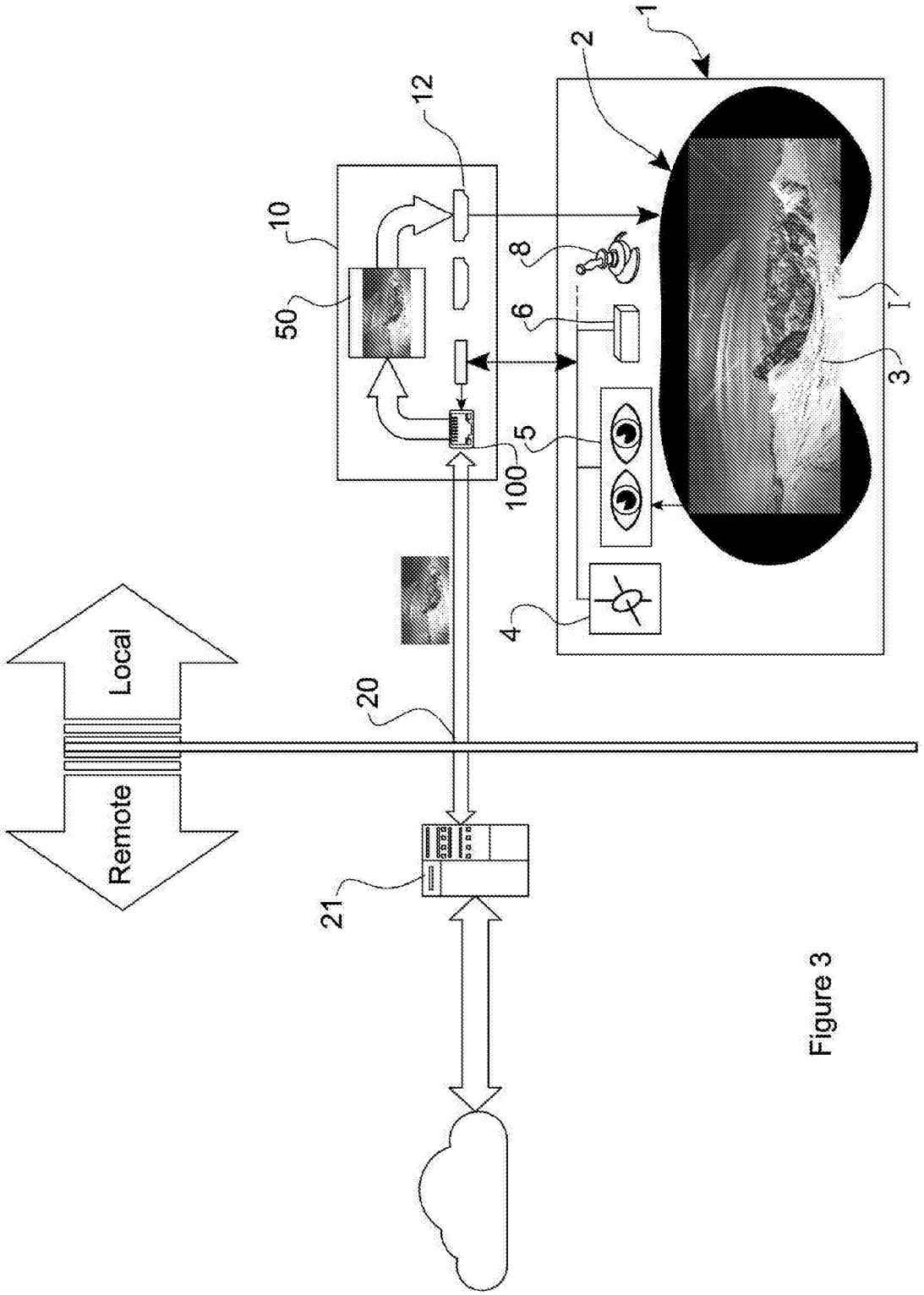

Figure 3

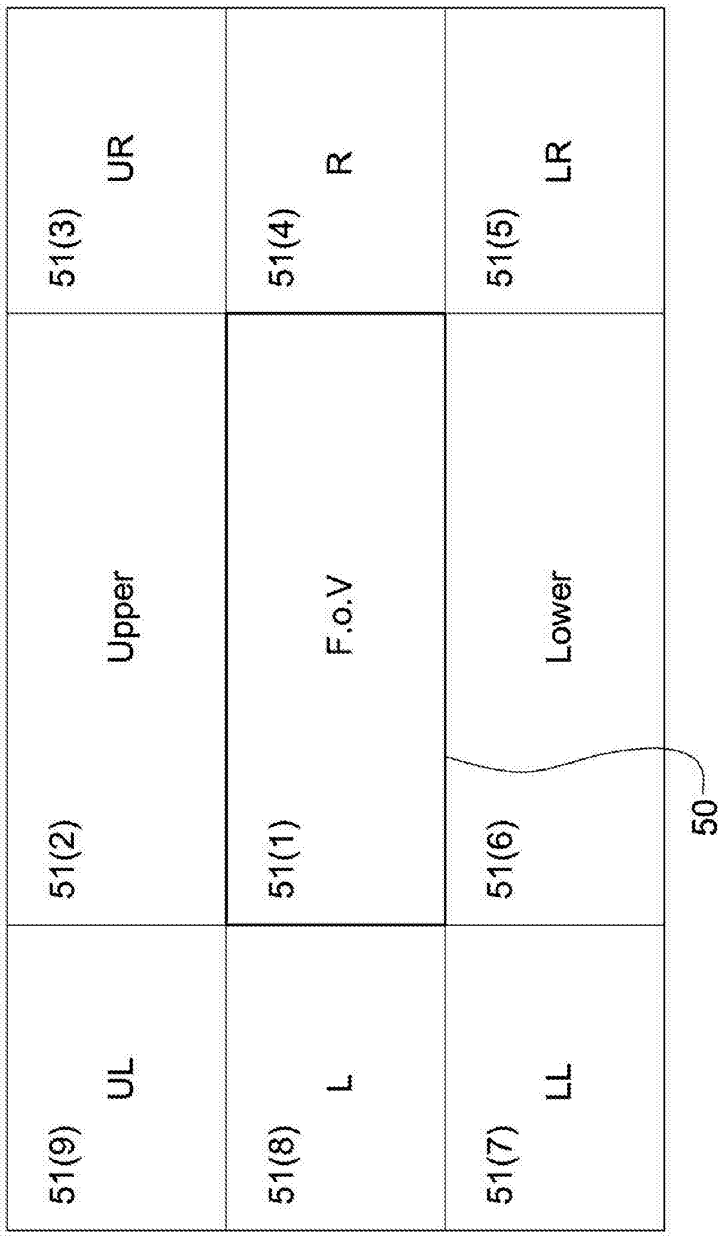
51(3)
UR
51(4)
R
51(5)
LR
51(2)
Upper
51(1)
F.o.V
51(6)
Lower
50
51(9)
UL
51(8)
L
51(7)
LL

Figure 4

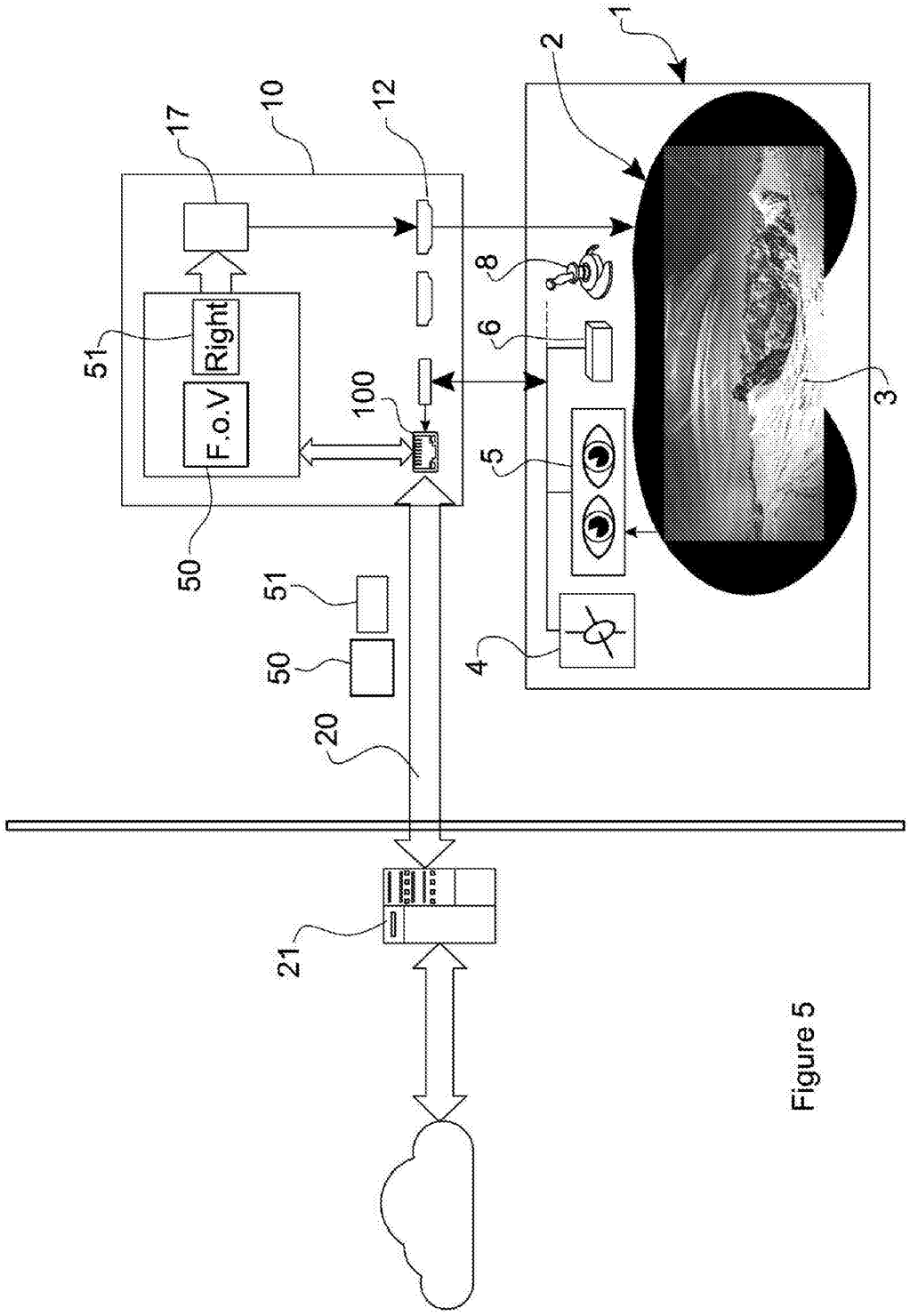

Figure 5

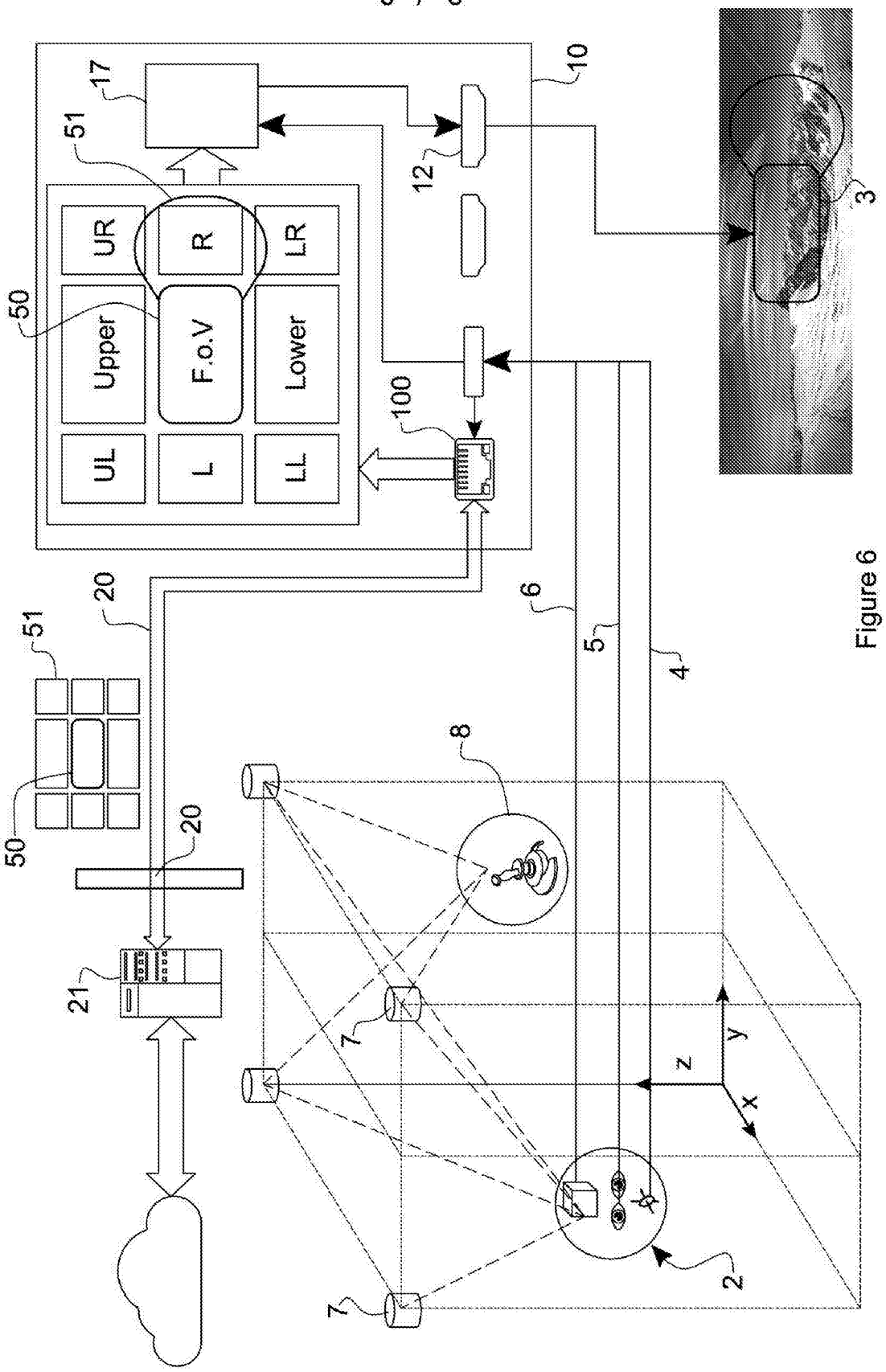
17
51
10
12
3
UR
R
LR
50
Upper
F.o.V
Lower
100
UL
L
LL
20
6
5
4
51
8
50
20
21
7
z
y
x
2
7

Figure 6

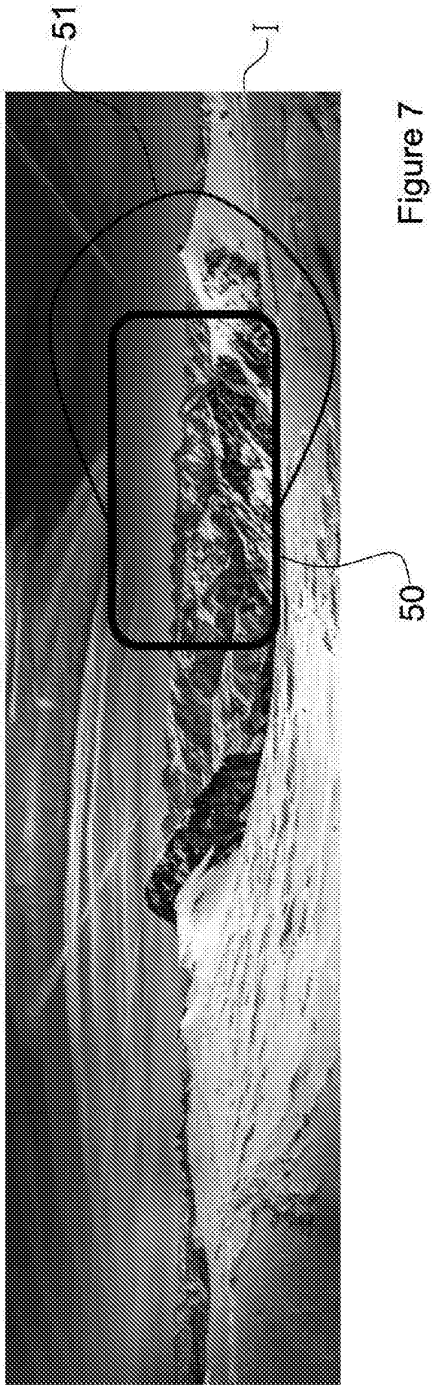

Figure 7

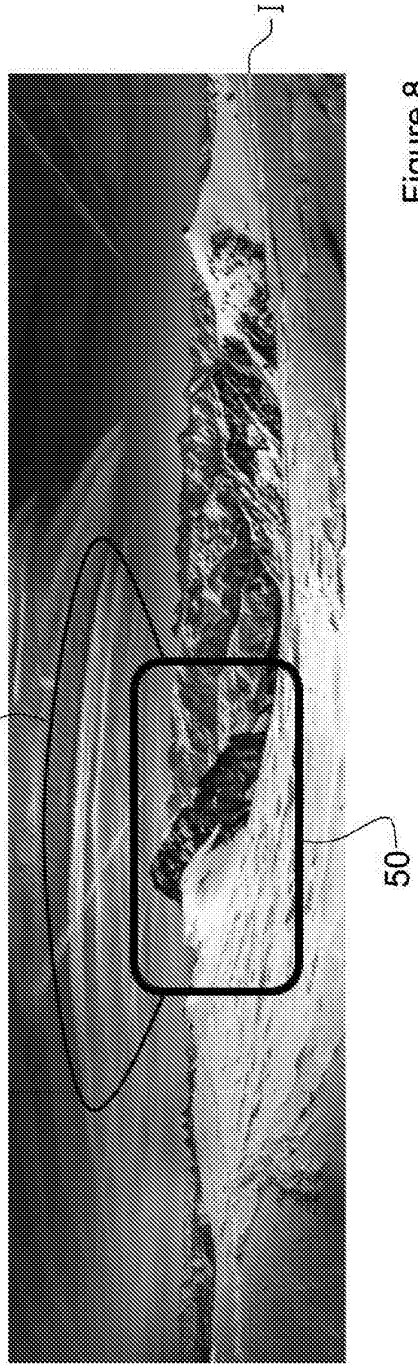

Figure 8

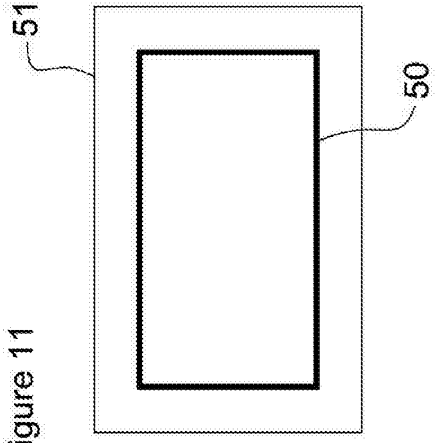

Figure 11

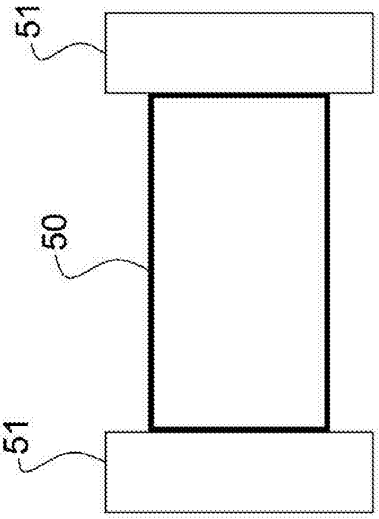

Figure 12

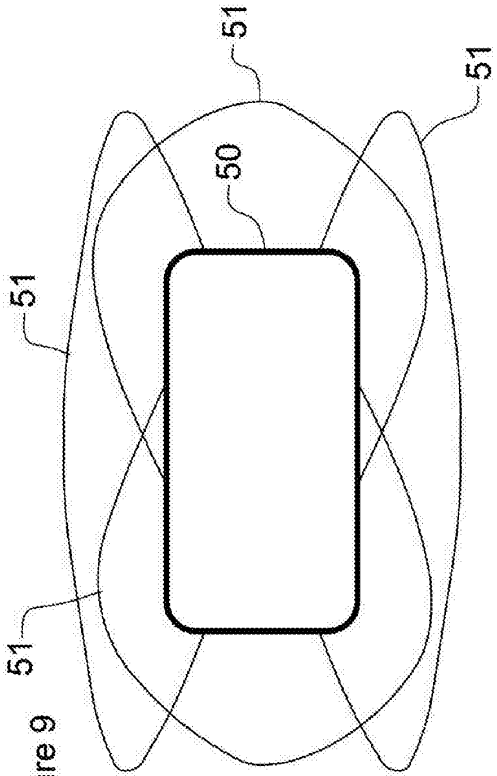

Figure 9

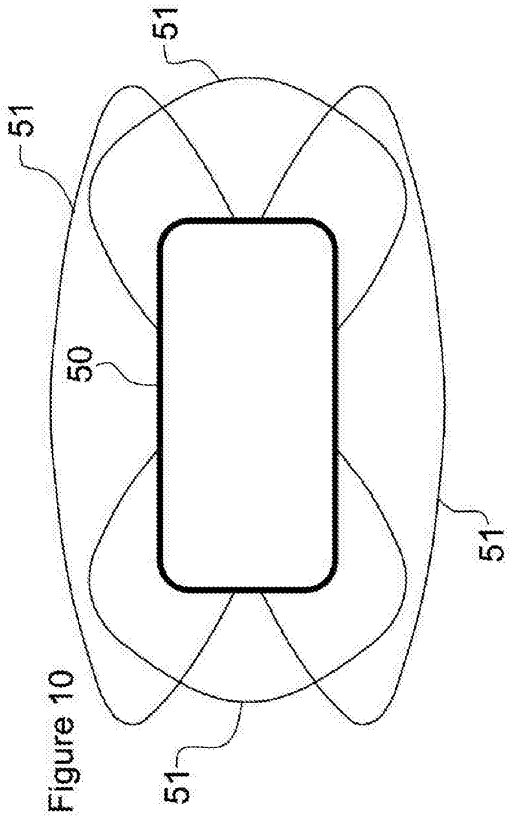

Figure 10