METHOD OF DRIVING A MASSAGE CHAIR

BACKGROUND

[0001] 1. Field of the Invention

[0002] The present inventions generally relate to massage chairs, and more particularly to methods of driving a massage chair.

[0003] 2. Description of the Related Art

[0004] Massage apparatuses currently available on the market include massage chairs equipped with a massage member capable of applying diverse types of massage actions on a user's body. According to the needs, a user may select a massage program corresponding to a predetermined combination of movement and pressure actions of the massage member for producing certain desirable relaxing effects. However, the application of the existing programs may require a relatively long massage time.

[0005] Therefore, there is a need for massage apparatuses that can address at least the foregoing issues.

SUMMARY

[0006] The present application describes methods of driving a massage chair for dispensing effective massage to reduce stress and relieve pain in an effective manner. The massage chair includes a backrest, a seat, two massage arms assembled with the backrest and having at least two contact members, a plurality of bottom airbags disposed in the seat, and a plurality of lateral airbags disposed at a left and a right side

of the seat. In one embodiment, the method includes defining a coordinate system including a lengthwise axis extending along a length of the backrest, a transversal axis extending from a left toward a right side of the backrest, and a front-rear axis extending from a front toward a rear of the backrest, and driving the massage arms to perform a first sequence of massage actions. The first sequence of massage actions includes moving the massage arms along the lengthwise axis to a first position so that the two contact members are placed adjacent to an upper shoulder area. While the massage arms are in the first position, the massage arms are actuated so as to cause the two contact members to move forward along the front-rear axis and then to apply a single kneading action. The massage arms then are moved downward along the lengthwise axis from the first position to a second position, and the bottom airbags are concurrently inflated. While the massage arms are in the second position, the massage arms are then actuated so as to cause the two contact members to apply another single kneading action.

[0007] In certain embodiment, the method further includes driving the massage arms to perform a second sequence of massage actions. The second sequence of massage actions includes moving the massage arms along the lengthwise axis to a third position so that the contact members are placed adjacent to the upper shoulder area, wherein the two contact members in the third position are spaced apart from each other by a first distance along the transversal axis. While the massage arms are in the third position, the bottom airbags in the seat are inflated, and the massage arms are actuated to cause a forward displacement of the contact members along the front-rear axis for applying a pressure for a first time duration, and to apply a tapping action after the lapse of the first time duration. The massage arms are then moved downward along the

lengthwise axis from the third position to a fourth position, and are actuated so that the contact members in the fourth position are spaced apart from each other by a second distance along the transversal axis that is greater than the first distance. While the massage arms are in the fourth position, a pressure is applied through the contact members for a second time duration, and the massage arms are actuated to apply another tapping action after the lapse of the second time duration.

[0008] The method further includes driving the massage arms to perform a third sequence of massage actions. The third sequence includes moving the massage arms along the lengthwise axis to a third position so that the contact members are placed adjacent to a lower waist area. While the massage arms are in the third position, the massage arms are actuated to cause the contact members to repeat two or more times a push and hold sequence including: moving the contact members forward along the front-rear axis for applying a pressure, and holding the pressure for a time duration.

[0009] In some embodiment, the method further includes driving the massage arms to perform a fourth sequence of massage actions. The fourth sequence includes inflating the lateral airbags for a first time duration, and after the lapse of the first time duration, inflating the bottom airbags for a second time duration.

[0010] In some other embodiments, the method also includes driving the massage arms to perform a fifth sequence of massage actions. The fifth sequence includes moving the massage arms along the lengthwise axis to a third position so that the contact members are placed adjacent to an upper neck area. While the massage arms are in the third position, the massage arms are actuated to cause a forward displacement of the contact members along the front-rear axis. The massage arms are

then moved along the lengthwise axis from the third position downward to a fourth position while keeping the forward displacement of the contact members.

BRIEF DESCRIPTION OF THE DRAWINGS

[0011] FIG. 1 is a schematic view illustrating an embodiment of a massage chair;

[0012] FIGS. 2 and 3 are schematic views illustrating the construction of a back massaging module provided in a backrest of the massage chair;

[0013] FIG. 4 is a schematic view illustrating massage arms of the back massaging module having upper contact members in a narrow state;

[0014] FIG. 5 is a schematic view illustrating the massage arms of the back massaging module having the upper contact members in a wide state;

[0015] FIG. 6 is a schematic view illustrating the massage arms of the back massaging module having the upper contact members in a medium state;

[0016] FIG. 7 is a schematic view illustrating a state where the upper contact members of the massage arms are displaced forward along a front-rear axis of the backrest;

[0017] FIG. 8 is a schematic view illustrating a state where the upper contact members of the massage arms are retracted backward along the front-rear axis of the backrest compared to the position shown in FIG. 7;

[0018] FIG. 9 is a simplified block diagram illustrating one embodiment of a control system implemented in the massage apparatus;

[0019] FIG. 10 is a flowchart illustrating method steps of a sequence of massage actions S1 implemented in the massage apparatus;

[0020] FIGS. 11A-11D are schematic views illustrating different positions of the massage arms during the sequence of massage actions S1;

[0021] FIG. 12 is a flowchart illustrating method steps of another sequence of massage actions S2 that may be implemented in the massage apparatus;

[0022] FIGS. 13A-13D are schematic views illustrating different positions of the massage arms during the sequence of massage actions S2;

[0023] FIG. 14 is a flowchart illustrating method steps of another sequence of massage actions S3 that may be implemented in the massage apparatus;

[0024] FIGS. 15A and 15B are schematic views illustrating different positions of the massage arms during the sequence of massage actions S3;

[0025] FIG. 16 is a flowchart illustrating method steps of another sequence of massage actions S4 implemented in the massage apparatus;

[0026] FIG. 17 is a flowchart illustrating method steps of another sequence of massage actions S5 implemented in the massage apparatus; and

[0027] FIGS. 18A-18C are schematic views illustrating different positions of the massage arms during the sequence of massage actions S5.

DETAILED DESCRIPTION OF THE EMBODIMENTS

[0028] FIG. 1 is a schematic view illustrating an embodiment of a massage chair 100. The massage chair 100 can include a seat 102, a backrest 104 assembled with the seat 102 at a rear thereof, and left and right armrests 106 disposed at the left and right sides of the seat 102. The seat 102 can provide support for a user in a sitting position. The backrest 104 can be pivotally connected with the seat 102, and can be adjustable in inclination. The backrest 104 can include a back massaging module 108 operable to apply kneading and/or tapping massages along the back of a user from the shoulders to the waist. A plurality of bottom airbags 110 can be disposed inside the seat 102, and lateral airbags 111 can be provided at the left and right flanks of the seat 102. The airbags 110 and 111 can inflate for pushing the user's body upward and/or applying pressure on the left and right thighs of the user's body.

[0029] As shown in FIG. 1, the massage chair 100 can further include a foot massage unit 112 disposed on a floor at an underside of the seat 102. The foot massage unit 112 is operable to apply massage to foot portions of the user.

[0030] In conjunction with FIG. 1, FIGS. 2 and 3 are schematic views illustrating the construction of the back massaging module 108. The back massaging module 108 can be movable vertically along a height direction of the backrest 104, which is also referred herein as a lengthwise axis Z. The back massaging module 108 can include a massage dispensing mechanism 120, a platform 122 for supporting the massage dispensing mechanism 120, and a forward positioning mechanism 123. The platform 122 can be operatively connected with a vertical driving unit 124 operable to drive unison motion of the platform 122 and the massage dispensing mechanism 120

along the lengthwise axis Z. The forward positioning mechanism 123 can be operable to modify an amount of displacement of an upper end of the massage dispensing mechanism 120 along a front-rear axis X extending from a front to a rear of the backrest 104. The massage dispensing mechanism 120 can be operable to apply different types of massage actions on a user's body, such as pressure actions, kneading actions, tapping actions, and up and down rolling actions.

[0031] In one embodiment, the massage dispensing mechanism 120 can include a left and a right massage arm 128, and a driving unit 130 operable to drive motion of the massage arms 128. The massage arms 128 can be transversally spaced apart from each other, and can rotate about a transversal axis Y extending horizontally from a left to a right side of the backrest 104. Each of the massage arms 128 can have a boomerang-like shape with upper and lower ends respectively assembled with contact members 134A and 134B. Each of the contact members 134A and 134B can be formed as a roller or ball made of a resin or hard rubber material.

[0032] The driving unit 130 can include a kneading drive portion 136 and a tapping drive portion 138. The kneading drive portion 136 can drive motion of the massage arms 128 so as to cause the contact members 134A and/or 134B to apply a kneading action. The kneading action can include a combination of pressing and stretching actions applied on the tissue. The tapping drive portion 138 can drive motion of the massage arms 128 so as to cause the contact members 134A and/or 134B to apply tapping massage on a desired region of the user's body.

[0033] The kneading drive portion 136 can include two inclined rotating members 140 respectively embedded at bent central regions of the two massage arms

128, a rotary shaft 142 passing through the rotating members 140, a kneading motor 144 for driving rotation of the rotary shaft 142, and two swing preventive mechanisms 146 at the rear of the central regions of the massage arms 128.

[0034] The rotary shaft 142 can be supported by a bearing 143 affixed with the platform 122. The rotary shaft 142 can include two inclined boss portions spaced apart from each other about which the rotating members 140 can be rotatably fitted via bearings. Accordingly, as the rotary shaft 142 is driven in rotation by the kneading motor 144, the two rotating members 140 can swing and wobble about the transversal axis Y defined by the rotary shaft 142, which results in a periodic swing motion of the massage arms 128 and contact members 134A and 134B.

[0035] In one embodiment, the inclination of the rotating member 140 can be maintained with a phase difference of 180° with respect to the rotary shaft 142 between the two massage arms 128. When the rotary shaft 142 is driven in rotation by the kneading motor 144, the upper contact members 134A of the massage arms 128 can swing toward and away from each other in an alternated manner, whereas the lower contact members 134B of the massage arms 128 can alternately swing toward and away from each other opposite to the movement of the upper contact members 134A (i.e., the lower contact members 134B move toward each other when the upper contact members 134A move away from each other, and vice versa). The aforementioned motion can produce kneading massage actions.

[0036] Referring to FIG. 3, each of the swing preventive mechanisms 146 can be formed by a ball joint or universal coupling. The swing preventive mechanisms 146 can restrain the massage arms 128 to move dependently with the rotation of the

rotary shaft 142, while permitting displacements of the massage arms 128 in a freely manner along the front-rear axis X, and in a limited range along the lengthwise axis Z.

[0037] The kneading drive portion 136 as described herein can produce kneading massage actions. Moreover, the output of the kneading motor 144 in the kneading drive portion 136 can be controlled so as to position the contact members 134A (and 134B) relatively closer or farther from each other along the transversal axis Y. FIGS. 4-6 are schematic views illustrating exemplary states of the massage arms 128 that can be reached by controlling the revolution of the kneading motor 144 in the kneading drive portion 136. The massage arms 128 can be controllably placed in different configurations corresponding to different distances between the upper contact members 134A along the transversal axis Y.

[0038] In FIG. 4, D1 designates a smallest distance between the upper contact members 134A. This can correspond to a "narrow state" of the upper contact members 134A.

[0039] In FIG. 5, D2 designates a greatest distance between the upper contact members 134A that is larger than D1. This can correspond to a "wide state" of the upper contact members 134A.

[0040] In FIG. 6, D3 designates an intermediate distance between the upper contact members 134A that is greater than D1 and smaller than D2. This can correspond to a "medium state" of the upper contact members 134A.

[0041] Referring again to FIGS. 1-3, the tapping drive portion 138 can include a rotary shaft 148 extending transversally parallel to the rotary shaft 142, two

spaced-apart eccentric parts 150 affixed with the rotary shaft 142 with a 180° phase difference, two housings 152 respectively assembled around the eccentric parts 150, a tapping motor 154 for driving rotation of the rotary shaft 148, and two crankshafts 156 respectively extending between the swing preventive mechanisms 146 and the housings 152. The rotary shaft 148 can be supported by a bearing 149 mounted for free up and down movements along two rail portions 157 affixed with the platform 122. The tapping motor 154 can be coupled integrally with the bearing 149, so that the tapping motor 154, the rotary shaft 148 and the bearing 149 can move along the lengthwise axis Z relative to the platform 122. Each of the crankshafts 156 can have a lower end that is coupled with the bent central region of the massage arm 128 via the swing preventive mechanism 146 described previously.

[0042] When the rotary shaft 148 is driven in rotation by the tapping motor 154, the eccentric parts 150 can rotate eccentrically relative to the axis of the rotary shaft 148, which cause the housings 152 to move circumferentially for transmitting a vertical pull and push action through the crankshafts 156 to the massage arms 128. As a result, the massage arms 128 can pivot about the rotary shaft 142, and the contact members 134A and 134B can move in opposite directions relative to the front-rear axis X. More specifically, the motion of the left and right massage arms 128 can occur in alternate manner owing to the 180° phase difference between the two eccentric parts 150 (i.e., the upper contact member 134A of the left massage arm 128 moves forward while the contact member 134A of the right massage moves rearward, and vice versa). This operation can produce a tapping action on the user's body.

[0043] Referring again to FIG. 2, the forward positioning mechanism 123 can be operable to cause the massage arms 128 to rotate about the rotary shaft 142 so as to modify a forward displacement of the contact members 134A and 134B along the front-rear axis X. While the massage arms 128 are placed at a given position along the lengthwise axis Z, the displacement effected by the forward positioning mechanism 123 can allow to apply or remove a pressure exerted by the contact members 134A and 134B into the body. In one embodiment, the forward positioning mechanism 123 can include a guide body 160 located midway between the two massage arms 128, a slider 162 disposed inside the guide body 160, a feed screw 164 and an electric motor 166.

[0044] The guide body 160 can be affixed with the bearing 149, and can have the shape of a box that has a slot along which the slider 162 can be guided for vertical movement along the lengthwise axis Z. The slider 162 can have a vertical threaded hole through which the feed screw 164 can be engaged. The feed screw 164 can be operatively connected with the electric motor 166 via the assembly of a worm wheel and worm gear (not shown). A rotation of the feed screw 164 driven by the electric motor 166 can thereby cause up and down movements of the slider 162 in the guide body 160.

[0045] When the feed screw 164 rotates in a first direction, the slider 162 can move upward until it abuts against an upper edge 174 of the guide body 160. Once the slider 162 engages with the upper edge 174, further rotation of the feed screw 164 in the first direction causes the slider 162 to push the guide body 160, the bearing 149 and the tapping motor 154 upward. The upward displacement of the bearing 149 and the tapping motor 154 can be transmitted through the crankshafts 156 to the massage arms

128, which cause the massage arms 128 to rotate about the rotary shaft 142 in a direction for concurrently moving the upper contact members 134A forward and retracting the lower contact members 134B backward. This displacement may allow the upper contact members 134A and/or lower contact members 134B to apply pressure on desired regions of the body.

[0046] When the feed screw 164 rotates in a second direction opposite to the first direction, the slider 162 can move downward until it abuts against a lower edge 176 of the guide body 160. Once the slider 162 engages with the lower edge 176, further rotation of the feed screw 164 in the second direction causes the slider 162 to push the guide body 160, the bearing 149 and the tapping motor 154 downward. The downward displacement of the bearing 149 and the tapping motor 154 can be transmitted through the crankshafts 156 to the massage arms 128, which cause the massage arms 128 to rotate about the rotary shaft 142 in another direction for concurrently moving the lower contact members 134B forward and retracting the upper contact members 134A backward.

[0047] FIGS. 7 and 8 are schematic views illustrating two exemplary states of the massage arms 128 that can be reached by controlling the actuation of the electric motor 166 in the forward positioning mechanism 123. In FIG. 7, the massage arms 128 are shown in a state where the upper contact members 134A are displaced forward along the front-rear axis X toward a user's body, whereas the lower contact members 134B are retracted backward. In FIG. 8, the massage arms 128 are shown in another state where the upper contact members 134A are retracted backward compared to the state shown in FIG. 7, whereas the lower contact members 134B are displaced forward.

[0048] Referring again to FIGS. 2 and 3, the vertical driving unit 124 can be operable to move the massage arms 128 along the lengthwise axis Z. The vertical driving unit 124 can include a pair of rails 180, guide rollers 182 , a screw shaft 184 and an electric motor 186. The rails 180 can be affixed inside the backrest 104, and extend along the lengthwise axis Z. The guide rollers 182 can be disposed at the left and right sides of an upper and lower region of the platform 122, and can be guided for movement along the rails 180. The screw shaft 184 can engage with a built-in nut (not shown) provided in the platform 122, and can be driven in rotation by the electric motor 186. When the screw shaft 184 is driven in rotation by the electric motor 186, the platform 122 and the massage dispensing mechanism 120 can move up and down in unison along the lengthwise axis Z.

[0049] FIG. 9 is a simplified block diagram illustrating one embodiment of a control system 202 implemented in the massage apparatus 100. The control system 202 can include a plurality of drivers 204, a control interface 206 and a microcontroller 208. The drivers 204 can be electric circuits operable to drive operation of various components of the massage apparatus 100 according to control signals outputted by the microcontroller 208. Examples of components driven by the drivers 204 can include the respective motors 144 and 154 of the kneading drive portion 136 and tapping drive portion 138, the electric motor 186 of the vertical driving unit 124, the electric motor 166 of the forward positioning mechanism 123, the pumps (not shown) associated with the airbags 110 and 111, solenoids, etc.

[0050] The control interface 206 can be connected with sensors and limit switches arranged in the massage apparatus 100, and can deliver various detection

signals to the microcontroller 208 to provide information such as physical height of the user, limits of movements, motor revolutions, etc.

[0051] The microcontroller 208 can control and supervise the operation of the massage apparatus 100. In one embodiment, the microcontroller 208 can exemplary be a 32-bit Reduced Instruction Set Computing (RISC) microcontroller. The microcontroller 208 can select one of a plurality of massage programs stored internally, and execute the selected massage program through the drivers 204. In one embodiment, the microcontroller 208 can exemplary include a processing unit 210, a memory 212 for storing massage program codes, and input/output (I/O) ports 214 through which the processing unit 210 can exchange signals with the drivers 204 and the control interface 206.

[0052] The memory 212 can store the codes of multiple massage programs 220 available in the massage apparatus 100. Each of the massage programs 220 can be executable by the processing unit 210 so as to actuate the massage arms 128 to perform a sequence of predetermined massage actions on a user's body. All the displacements of the massage arms 128 can be conducted in a spatial coordinate system defined by the lengthwise axis Z, the transversal axis Y and the front-rear axis X.

[0053] In conjunction with FIGS. 1-3, FIG. 10 is a flowchart of a sequence of massage actions S1 implemented in the massage apparatus 100, and FIGS. 11A-11D are schematic views illustrating different positions of the massage arms 128 during the sequence of massage actions S1. In step 302, the massage arms 128 can be displaced by the vertical driving unit 124 along the lengthwise axis Z to a position P11 so that the upper contact members 134A can be placed adjacent to an upper shoulder area A1 of a

user's body, as shown in FIG. 11A. While the massage arms 128 are in the position P11, the upper contact members 134A can be placed in the narrow state as shown in FIG. 4, touching the upper shoulder area A1.

[0054] In step 304, while the massage arms 128 are in the position P11, the massage arms 128 can be actuated to cause a forward displacement X11 of the upper contact members 134A along the front-rear axis X toward the body. This forward displacement of the upper contact members 134A can be driven by the actuation of the forward positioning mechanism 123 as described previously.

[0055] In step 306, the massage arms 128 then can be moved downward along the lengthwise axis Z from the position P11 to a position P12 as shown in FIG. 11B. In step 308, while the massage arms 128 are in the position P12, the kneading drive portion 136 can be actuated to cause the upper contact members 134A to apply one single cycle of the kneading massage action. During one cycle of the kneading massage action, the upper contact members 134A can travel once from the narrow state shown in FIG. 4 toward the wide state shown in FIG. 5, and once from the wide state back to the narrow state.

[0056] In step 310, the bottom airbags 110 in the seat 102 can be inflated, and the vertical driving unit 124 can be concurrently actuated to move the massage arms 128 downward from the position P12 to a lower position P13 as shown in FIG. 11C. While the massage arms 128 are in the position P13 and the upper contact members 134A are in the narrow state, the kneading drive portion 136 in step 312 can be actuated to cause the upper contact members 134A to apply another single cycle of the kneading massage action like described in step 308.

[0057] While the bottom airbags 110 in the seat 102 continue to inflate, the body slowly moves upward, and the vertical driving unit 124 in step 314 can be actuated to move the massage arms 128 further downward from the position P13 to a lower position P14 adjacent to a shoulder region A2 as shown in FIG. 11D. In next step 316, while the massage arms 128 are in the position P14, the kneading drive portion 136 can be actuated to cause the upper contact members 134A to apply three cycles of the kneading massage action.

[0058] In one embodiment, the sequence of massage actions S1 can take about one to about two minutes to complete. The sequence of massage actions S1 can apply a quick scraping massage to effectively relieve the tension and pain in the upper shoulder and shoulder areas.

[0059] FIG. 12 is a flowchart illustrating method steps of another sequence of massage actions S2 that may be implemented in the massage apparatus 100, and FIGS. 13A-13D are schematic views illustrating different positions of the massage arms 128 during the application of the sequence of massage actions S2. In initial step 402, the massage arms 128 can be displaced by the vertical driving unit 124 to a position P21 so that the upper contact members 134A can touch the upper shoulder area A1 of a user's body, as shown in FIG. 13A. While the massage arms 128 are in the position P21, the upper contact members 134A can be placed in the narrow state as shown in FIG. 4.

[0060] In next step 404, while the massage arms 128 are in the position P21, the bottom airbags 110 in the seat 102 can be inflated, and the massage arms 128 can be actuated by the forward positioning mechanism 123 to cause a forward displacement

X21 of the upper contact members 134A into the body. A shiatsu type pressure can be thereby applied and held for a time duration T21.

[0061] Once the time duration T21 has lapsed, the tapping drive portion 138 in step 406 can be operated so that the upper contact members 134A in the narrow state can apply a tapping massage action for a time duration T22 to release the tension.

[0062] In subsequent step 408, the vertical driving unit 124 can be actuated to move the massage arms 128 downward from the position P21 to a lower position P22 as shown in FIG. 13B. In step 410, while the massage arms 128 are in the position P22, the forward displacement of the upper contact members 134A can apply a pressure into the body for a time duration T23. The bottom airbags 110 may be kept inflated during steps 408 and 410.

[0063] Once the time duration T23 has lapsed, the tapping drive portion 138 in step 412 can be operated so that the upper contact members 134A can tap the same area for a time duration T24, which further release tension in the upper shoulder to shoulder area.

[0064] In subsequent step 414, the kneading drive portion 136 then can be operated to change the upper contact members 134A from the narrow state shown in FIG. 4 to the medium state shown in FIG. 6, and the vertical driving unit 124 can be actuated to move the massage arms 128 downward from the position P22 to a lower position P23 as shown in FIG. 13C. The bottom airbags 110 may be kept inflated during step 414.

[0065] In step 416, while the massage arms 128 are in the position P23, the upper contact members 134A in the medium state can apply a pressure into the body for a time duration T25.

[0066] Once the time duration T25 has lapsed, the tapping drive portion 138 in step 418 can be operated so that the upper contact members 134A can tap the same area for a time duration T26. This tapping action is performed while the massage arms 128 are in the medium state and at the position P23.

[0067] In next step 420, the kneading drive portion 136 can be operated to change the upper contact members 134A from the medium state shown in FIG. 6 to the wide state shown in FIG. 5, and the vertical driving unit 124 can be actuated to move the massage arms 128 downward from the position P23 to a lower position P24 as shown in FIG. 13D. The bottom airbags 110 may be kept inflated during step 420.

[0068] In step 422, while the massage arms 128 are in the position P24, the upper contact members 134A can apply a pressure into the body for a time duration T27.

[0069] Once the time duration T27 has lapsed, the tapping drive portion 138 in step 424 can be operated so that the upper contact members 134A can tap the same area for a time duration T28. This tapping action is performed while the massage arms 128 are at the position P24 and in the wide state, which can release tension around a wide portion in the shoulder area A2.

[0070] The sequence of massage actions S2 can apply a quick scraping massage of about less than one minute to effectively relieve the tension and pain in the shoulder area.

[0071] FIG. 14 is a flowchart of another sequence of massage actions S3 implemented in the massage apparatus 100, and FIGS. 15A and 15B are schematic views illustrating different positions of the massage arms 128 during the sequence of massage actions S3. In initial step 502, the massage arms 128 can be moved by the vertical driving unit 124 to a position P31, so that the upper contact members 134A can be placed adjacent to a lower waist area A3 as shown in FIG. 15A, and the lower contact members 134B are located adjacent to the seat 102. While the massage arms 128 are in the position P31, the upper contact members 134A can be placed in any of the narrow (as shown), medium and wide state, and can touch the lower back of the body.

[0072] In step 504, while the massage arms 128 are in the position P31, the massage arms 128 can be actuated by the forward positioning mechanism 123 to cause a forward displacement X31 of the upper contact members 134A into the body. A push action can be thereby applied and held for a time duration T31.

[0073] Once the time duration T31 has lapsed, the forward positioning mechanism 123 in step 506 can actuate the massage arms 128 to retract the upper contact members 134A backward to release the pressure, and then to impart another forward displacement X32 of the upper contact members 134A into the body. The forward displacement X32 can be made while the massage arms 128 are still in the position P31. In one embodiment, the forward displacement X32 may be equal or

greater than the previous forward displacement X31. Another push action can be thereby applied and held for a time duration T32.

[0074] The aforementioned push and hold sequence can be repeated several times for a same area of the body. Moreover, a tapping action may be applied by the massage arms 128 to release tension immediately after each push and hold sequence: for example, a tapping action may be performed between steps 504 and 506.

[0075] In step 508, the massage arms 128 can be moved upward by the vertical driving unit 124 from the position P31 to higher position P32 as shown in FIG. 15B. In other embodiments, the massage arms 128 may also be moved downward from the position P31. In step 510, while the massage arms 128 are in the position P32, one or more push and hold sequence similar to those described in steps 504 and 506 can be repeated again. In one embodiment, the sequence of massage actions S3 can take less than about one to about two minutes to effectively relieve tension and pain around the lower back region.

[0076] In conjunction with FIG. 1, FIG. 16 is a flowchart illustrating method steps of another sequence of massage actions S4 implemented in the massage apparatus 100. In step 602, the lateral airbags 111 can inflate to squeeze the left and right thighs for a time duration T41. Subsequently, the bottom airbags 110 of the seat 102 in step 604 can inflate for a time duration T42 to push upward the buttock. This short sequence of about one to about two minutes can provide toning effects around the thighs and hip areas.

[0077] FIG. 17 is a flowchart illustrating method steps of another sequence of massage actions S5 implemented in the massage apparatus 100, and FIGS. 18A-18C are

schematic views illustrating different positions of the massage arms 128 during the sequence of massage actions S5. In initial step 702, the massage arms 128 can be moved by the vertical driving unit 124 to a position P51 so that the upper contact members 134A can be placed adjacent to an upper neck area A4 as shown in FIG. 18A. The upper neck area A4 is higher than the upper shoulder area A1. When the massage arms 128 are in the position P51, the upper contact members 134A can be placed in the narrow state as shown in FIG. 4, and can slightly touch the skin surface.

[0078] In step 704, while the massage arms 128 are in the position P51, the forward positioning mechanism 123 can be actuated to cause a forward displacement X51 of the upper contact members 134A into the body. A pressure can be thereby applied and held for a time duration T51.

[0079] After the time duration T51 has lapsed, the forward positioning mechanism 123 in step 706 can be actuated to release the pressure and to cause another forward displacement X52 of the upper contact members 134A into the body. The forward displacement X52 can be equal to or differ from X51. In next step 708, while the forward displacement X52 of the upper contact members 134A is maintained, the vertical driving unit 124 can then drive the massage arms 128 to move downward along the lengthwise axis Z from the position P51 to a lower position P52 as shown in FIG. 18B. This can produce a push and roll massage action on the body.

[0080] In step 710, while the massage arms 128 are in the position P52, the forward positioning mechanism 123 can be operated to move the upper contact members 134A backward along the front-rear axis X, which can result in the lower contact members 134B to apply some pressure on the neck area. The vertical driving

unit 124 in next step 712 then can drive the massage arms 128 to move downward along the lengthwise axis Z from the position P52 to a lower position P53 as shown in FIG. 18C. During this travel, the upper and lower contact members 134A and 134B can concurrently apply pressure on the body, which can produce another push and roll massage action.

[0081] In step 714, the massage arms 128 then can be actuated by the forward positioning mechanism 123 to retract the upper contact members 134A backward and release the pressure applied by the upper contact members 134A on the body.

[0082] In next step 716, the massage arms 128 then can be actuated so that the lower contact members 134B can perform a push and roll sequence on the back of the body similar to that of the upper contact members 134A described in steps 704 through 708.

[0083] In one embodiment, the sequence of massage actions S5 can take about one to about two minutes to complete. The push and roll sequences applied in the sequence of massage actions S5 can effectively relieve stress and pain around the neck and shoulder areas.

[0084] Advantages of the systems and methods described herein include the ability to apply short sequences of massage actions S1 through S5 that can effectively relieve stress and pain for different regions of the body such as the neck area, shoulder, lower back and thigh and hip areas. The sequences S1 through S5 can be implemented independently from one another, or in any desirable combinations. For example, certain embodiments can implement any one of the sequences S1 through S5 in the massage chair. Other embodiments can implement two, three, four or five of the

sequences S1 through S5 in the massage chair. With the sequences of massage actions as described herein, a user can enjoy enhanced massage experience and obtain effective relief of muscular tension and pain.

[0085] Realizations of the systems and methods have been described only in the context of particular embodiments. These embodiments are meant to be illustrative and not limiting. Many variations, modifications, additions, and improvements are possible. Accordingly, plural instances may be provided for components described herein as a single instance. Structures and functionality presented as discrete components in the exemplary configurations may be implemented as a combined structure or component. These and other variations, modifications, additions, and improvements may fall within the scope of the inventions as defined in the claims that follow.

WHAT IS CLAIMED IS:

1. A method of driving a massage chair, wherein the massage chair includes a backrest, a seat, two massage arms assembled with the backrest and having at least two contact members, a plurality of bottom airbags disposed in the seat, and a plurality of lateral airbags disposed at a left and a right side of the seat, the method comprising:

defining a coordinate system including a lengthwise axis extending along a length of the backrest, a transversal axis extending from a left toward a right side of the backrest, and a front-rear axis extending from a front toward a rear of the backrest; and

driving the massage arms to perform a first sequence of massage actions including:

moving the massage arms along the lengthwise axis to a first position so that the two contact members are placed adjacent to an upper shoulder area;

while the massage arms are in the first position, actuating the massage arms so as to cause the two contact members to move forward along the front-rear axis and apply a single kneading action;

moving the massage arms downward along the lengthwise axis from the first position to a second position, and concurrently inflating the bottom airbags; and

while the massage arms are in the second position, actuating the massage arms so as to cause the two contact members to apply another single kneading action.

2. The method according to claim 1, wherein the first sequence of massage actions further includes:

while keeping the bottom airbags inflated, moving the massage arms downward along the lengthwise axis from the second position to a third position; and

while the massage arms are in the third position, actuating the massage arms so as to cause the two contact members to apply three additional cycles of kneading actions.

3. The method according to claim 1, further including driving the massage arms to perform a second sequence of massage actions including:

moving the massage arms along the lengthwise axis to a third position so that the contact members are placed adjacent to the upper shoulder area, wherein the two contact members in the third position are spaced apart from each other by a first distance along the transversal axis;

while the massage arms are in the third position, inflating the bottom airbags in the seat, and actuating the massage arms to cause a forward displacement of the contact members along the front-rear axis for applying a pressure for a first time duration, and to apply a tapping action after the lapse of the first time duration;

moving the massage arms downward along the lengthwise axis from the third position to a fourth position, and actuating the massage arms so that the contact members in the fourth position are spaced apart from each other by a second distance along the transversal axis that is greater than the first distance; and

while the massage arms are in the fourth position, applying a pressure through the contact members for a second time duration, and actuating the massage arms to apply another tapping action after the lapse of the second time duration.

4. The method according to claim 3, wherein the second sequence of massage actions further includes:

moving the massage arms downward along the lengthwise axis from the fourth position to a fifth position, and actuating the massage arms so that the contact members in the fifth position are spaced apart from each other by a third distance along the transversal axis that is greater than the second distance;

while the massage arms are in the fifth position, keeping the bottom airbags inflated, holding the forward displacement of the contact members for applying a pressure for a third time duration, and actuating the massage arms to apply another tapping action after the lapse of the third time duration.

5. The method according to claim 3, wherein the bottom airbags are kept in an inflated state during the application of the pressure in the second time duration.

6. The method according to claim 1, further including driving the massage arms to perform a third sequence of massage actions including:

moving the massage arms along the lengthwise axis to a third position so that the contact members are placed adjacent to a lower waist area; and

while the massage arms are in the third position, actuating the massage arms so as to cause the contact members to repeat two or more times a push and hold sequence including moving the contact members forward along the front-rear axis for applying a pressure, and holding the pressure for a time duration.

7. The method according to claim 6, wherein the third sequence of massage actions further includes:

while the massage arms are in the third position, actuating the massage arms so as to cause the contact members to apply a tapping action immediately after each of the push and hold sequence.

8. The method according to claim 6, wherein the push and hold sequence is repeated with a different forward displacement of the contact members along the front-rear axis, and a different time duration of holding the pressure.

9. The method according to claim 6, wherein the third sequence of massage actions further includes:

moving the massage arms along the lengthwise axis from the third position to a fourth position; and

while the massage arms are in the fourth position, actuating the massage arms so as to cause the contact members to repeat two or more times the push and hold sequence.

10. The method according to claim 1, further including driving the massage arms to perform a fourth sequence of massage actions including:

inflating the lateral airbags for a first time duration; and

after the lapse of the first time duration, inflating the bottom airbags for a second time duration.

11. The method according to claim 1, further including driving the massage arms to perform a fifth sequence of massage actions including:

moving the massage arms along the lengthwise axis to a third position so that the contact members are placed adjacent to an upper neck area;

while the massage arms are in the third position, actuating the massage arms so as to cause a forward displacement of the contact members along the front-rear axis; and

moving the massage arms along the lengthwise axis from the third position downward to a fourth position while keeping the forward displacement of the contact members.

12. The method according to claim 11, wherein before effecting the forward displacement of the contact members, the fifth sequence of massage actions further includes actuating the massage arms so as to cause the contact members to move forward along the front-rear axis for applying a pressure for a time duration, while the massage arms are in the third position.

METHOD OF DRIVING A MASSAGE CHAIR

ABSTRACT

Methods of driving a massage chair are described for dispensing effective massage to reduce stress and relieve pain in an effective manner. The massage chair includes a backrest, a seat, two massage arms assembled with the backrest and having at least two contact members, a plurality of bottom airbags disposed in the seat, and a plurality of lateral airbags disposed at a left and a right side of the seat. The method includes defining a coordinate reference including a lengthwise axis extending along a length of the backrest, a transversal axis extending from a left toward a right side of the backrest, and a front-rear axis extending from a front toward a rear of the backrest, and driving the massage arms to perform certain sequences of massage actions to provide relief in the neck and shoulder areas, the lower back, and thigh and hip.

[No Fig.]

100

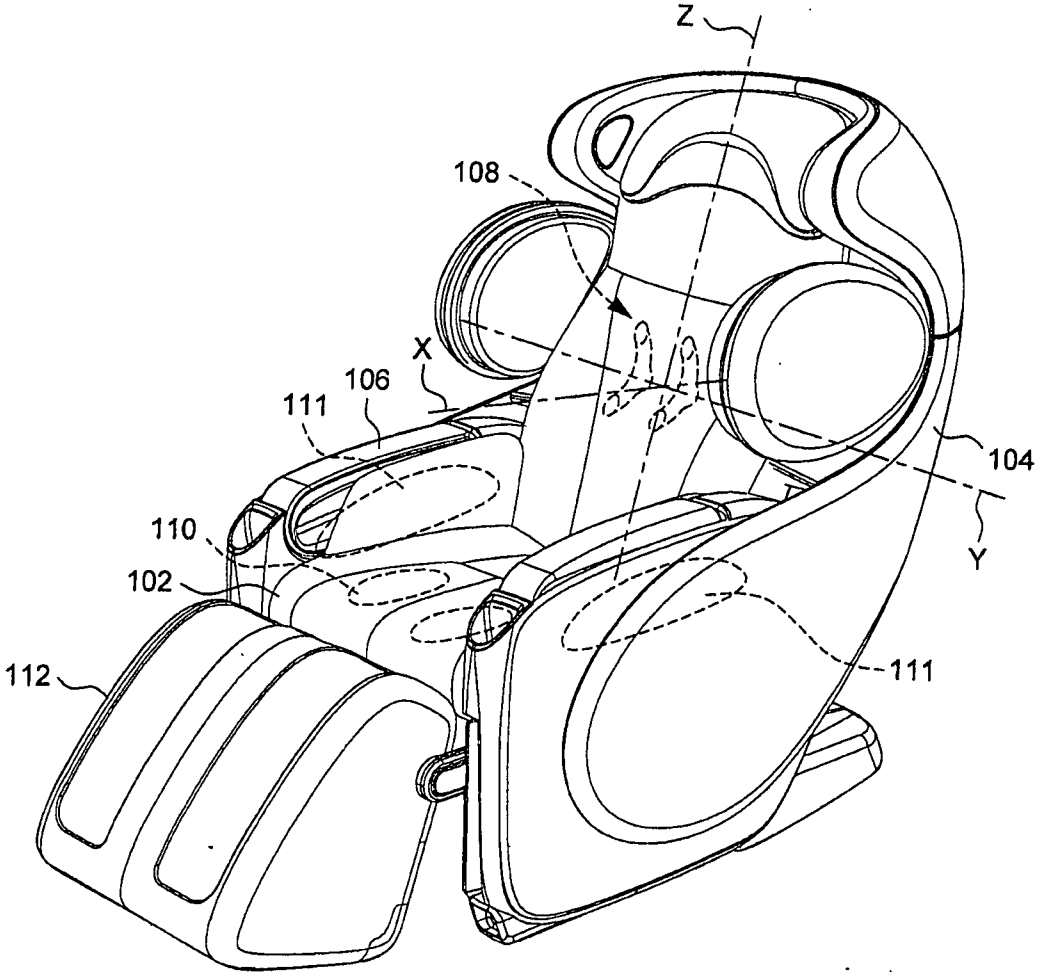

FIG. 1

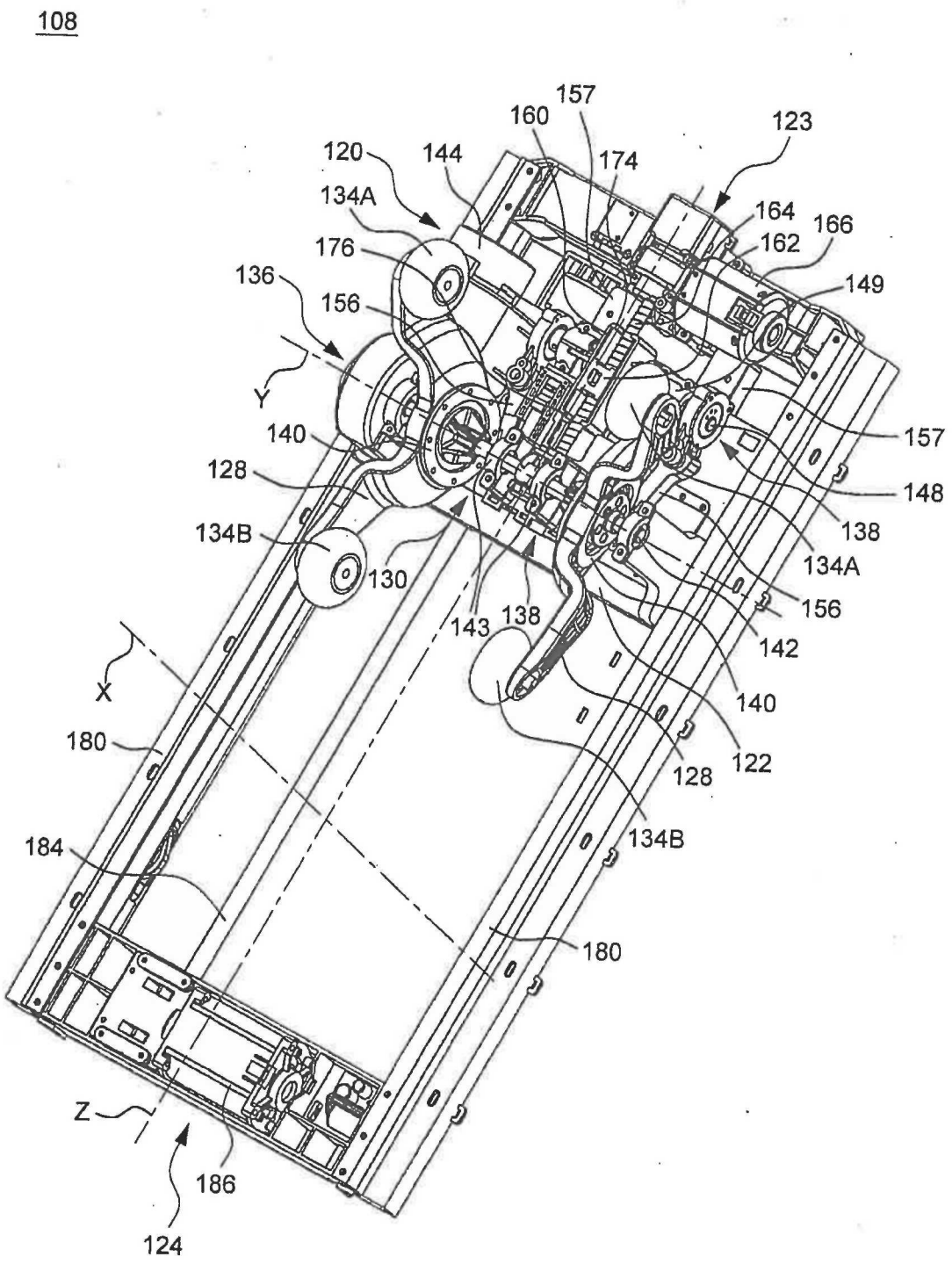
108
157
160
123
120
144
174
134A
164
166
162
176
149
136
156
Y
157
140
148
128
138
134B
134A
130
156
143
138
142
X
140
180
122
128
134B
184
180
Z
186
124

FIG. 2

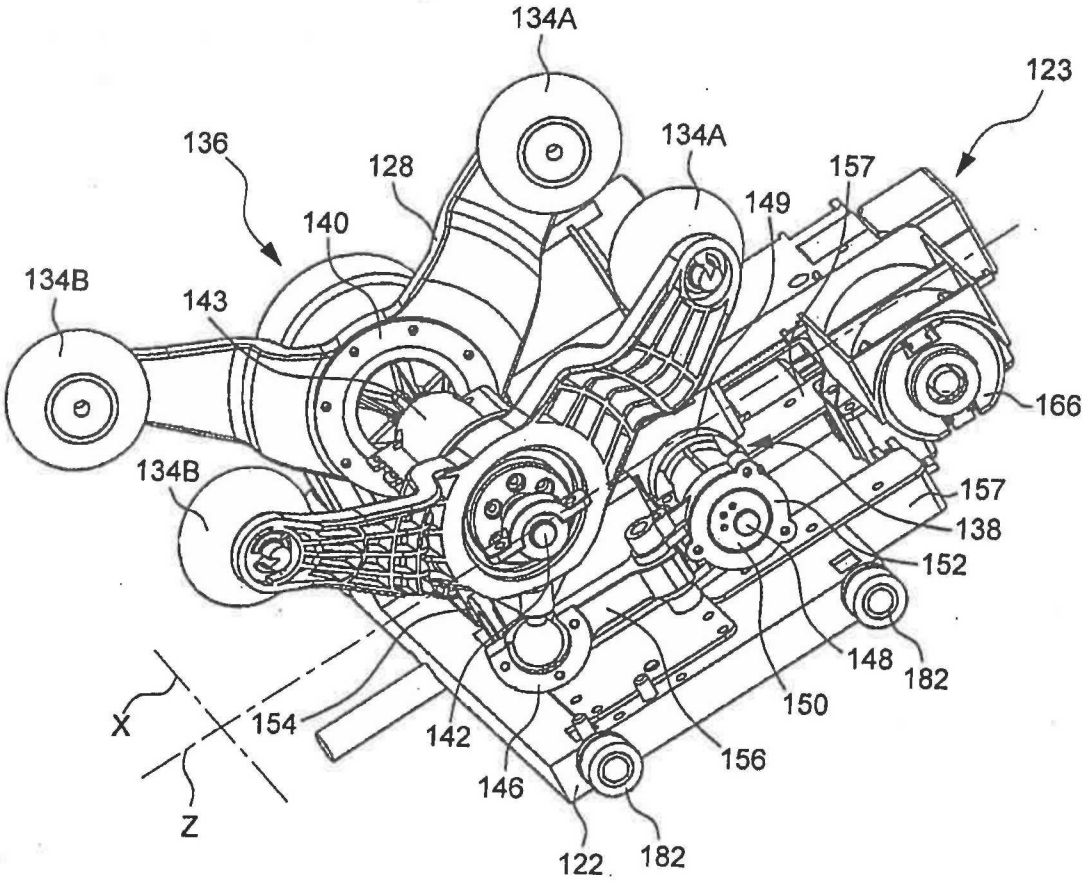
134A
123
136
128
134A
157
140
149
134B
143
166
134B
157
138
152
148
182
150
X
154
142
156
146
Z
122
182

FIG. 3

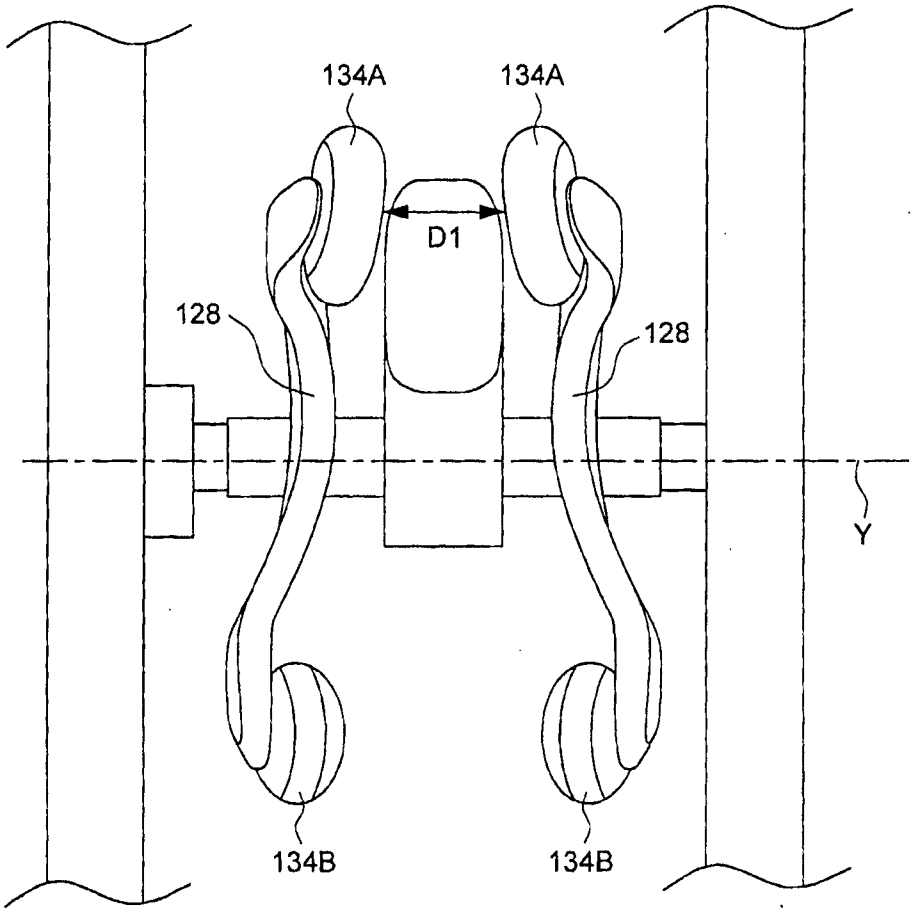

FIG. 4

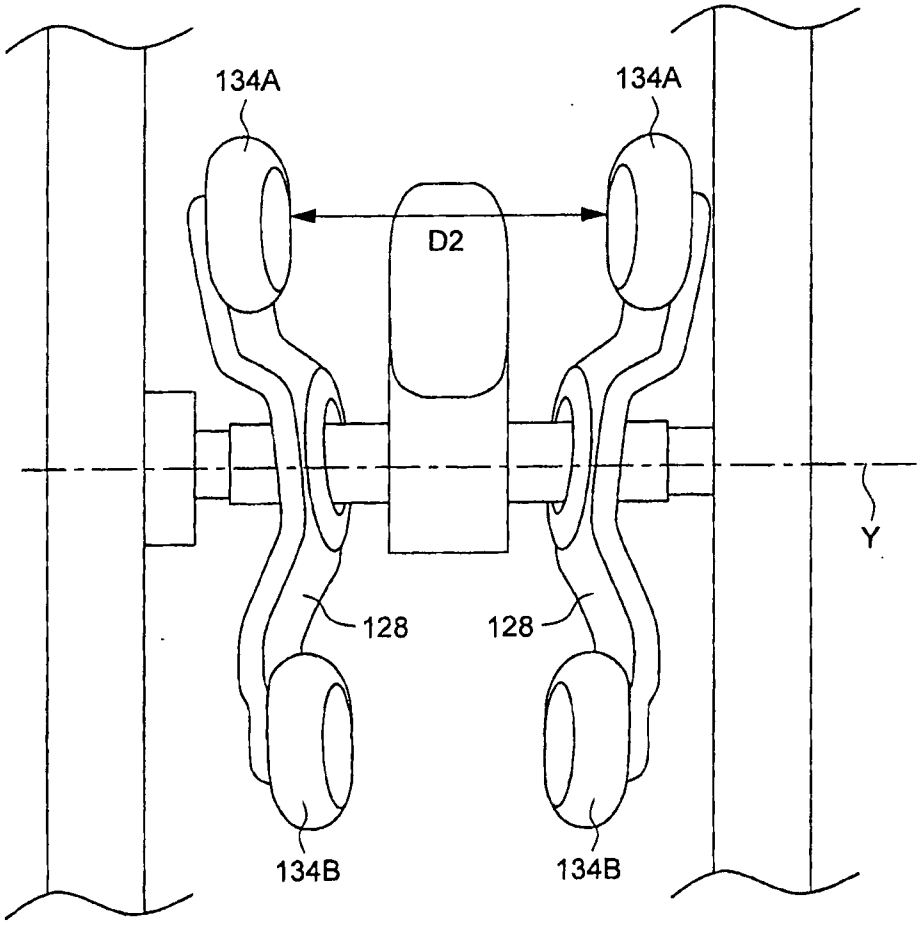

FIG. 5

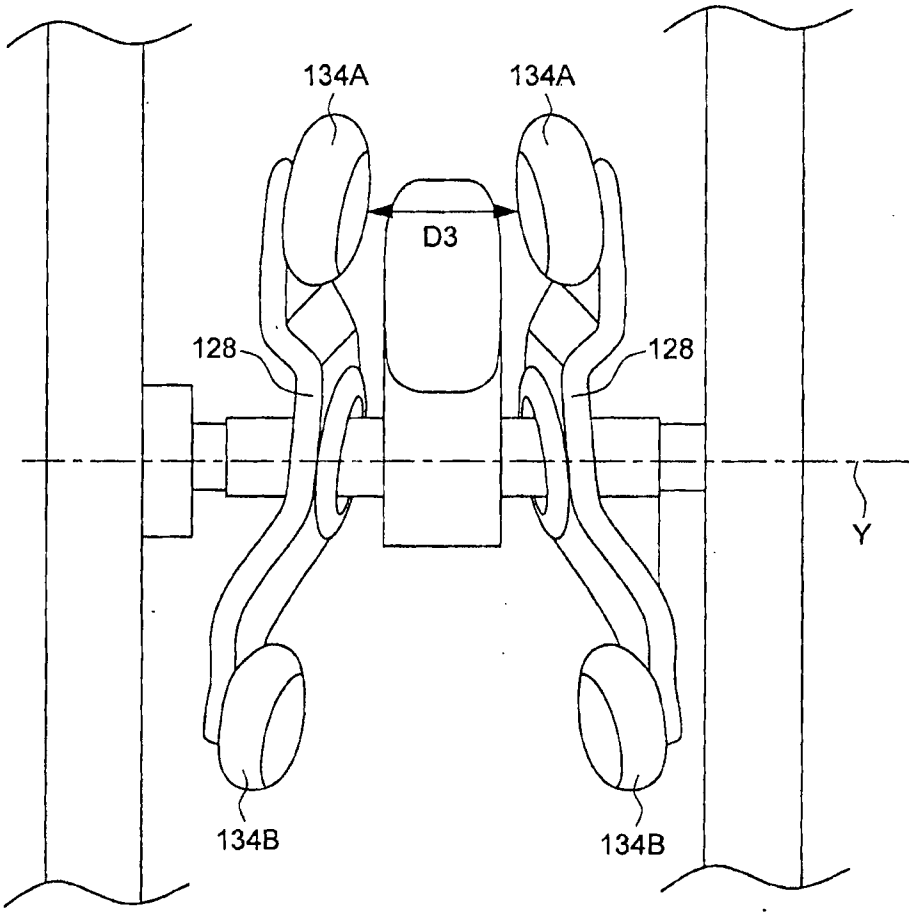

FIG. 6

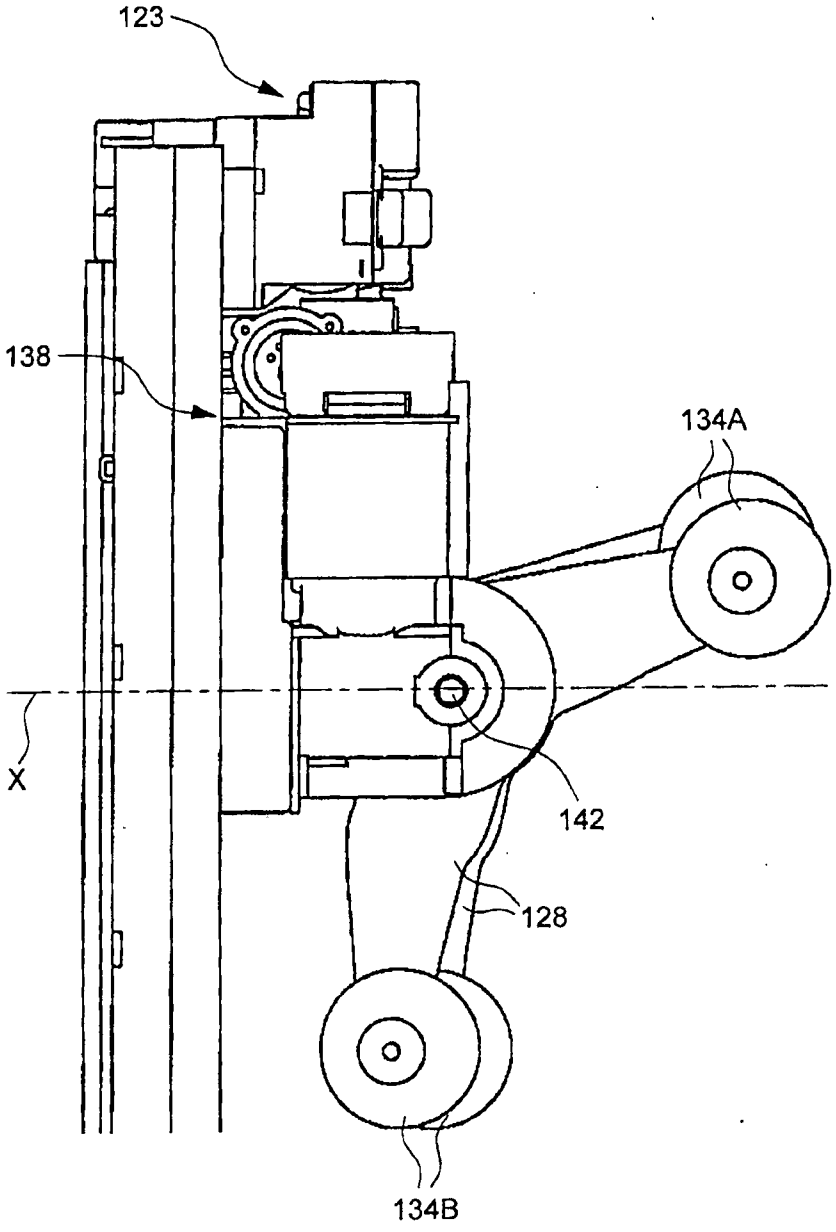

FIG. 7

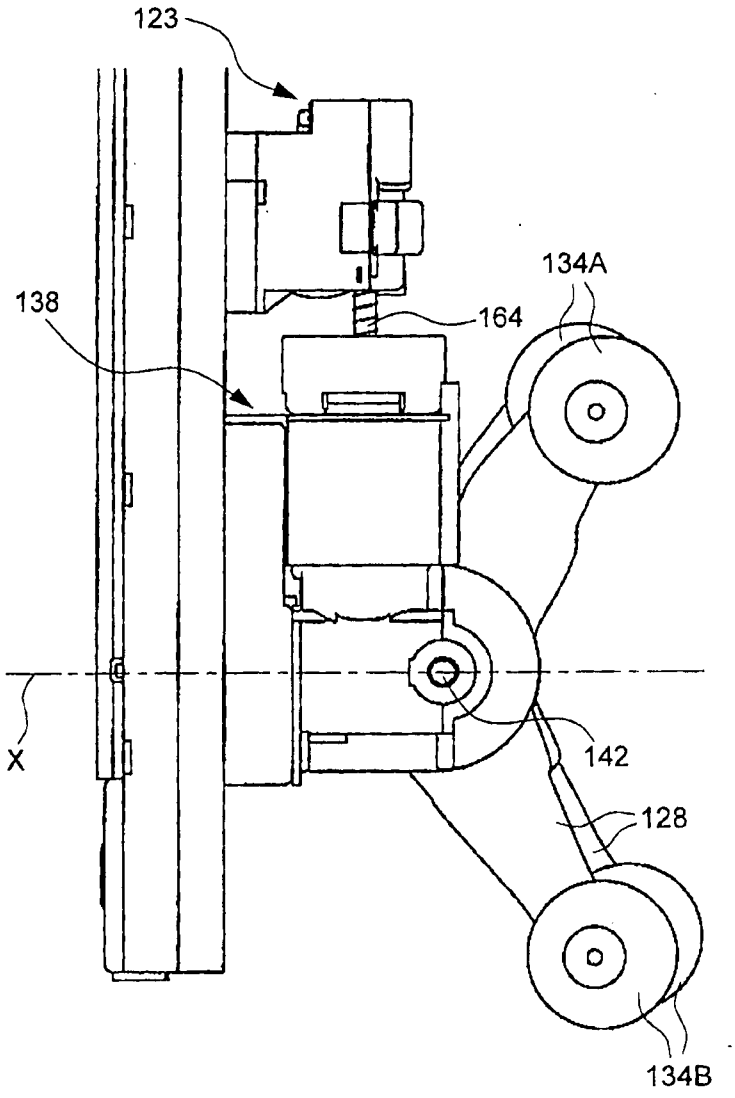

FIG. 8

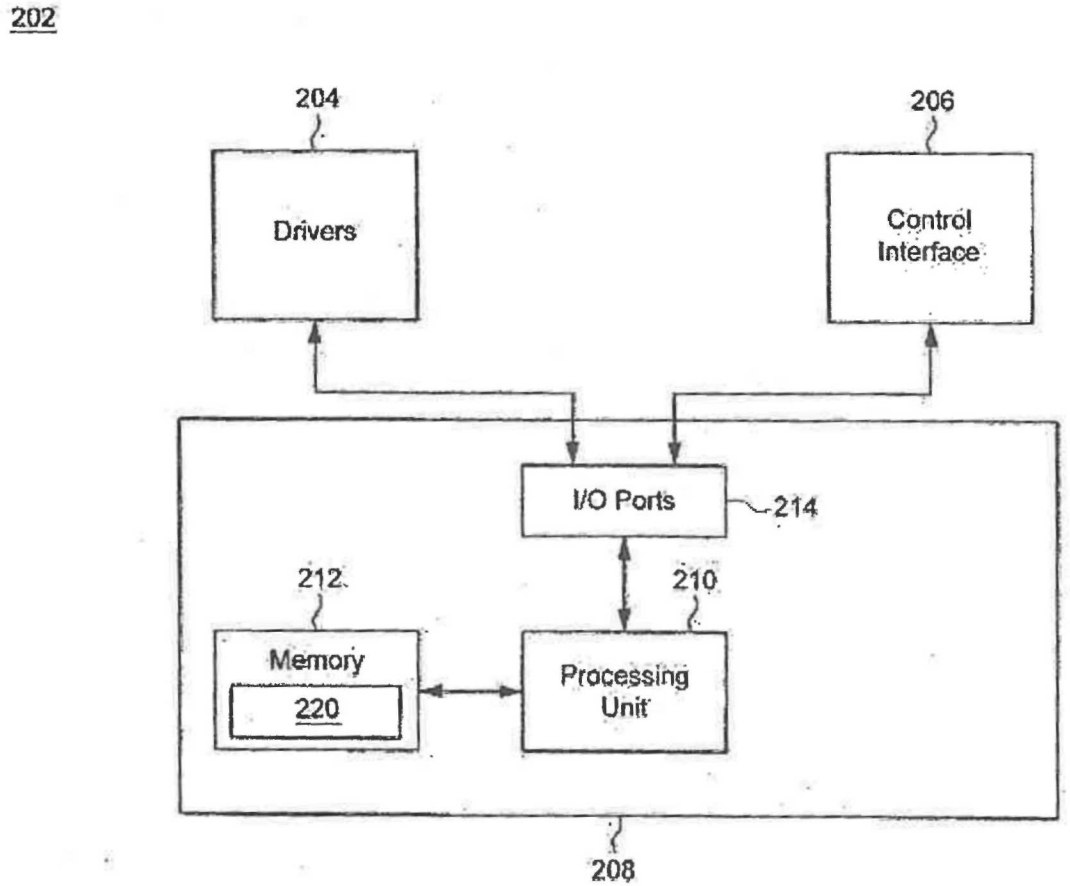
202
204
Drivers
206
Control Interface
I/O Ports
214
212
210
Memory
220
Processing Unit
208

FIG. 9

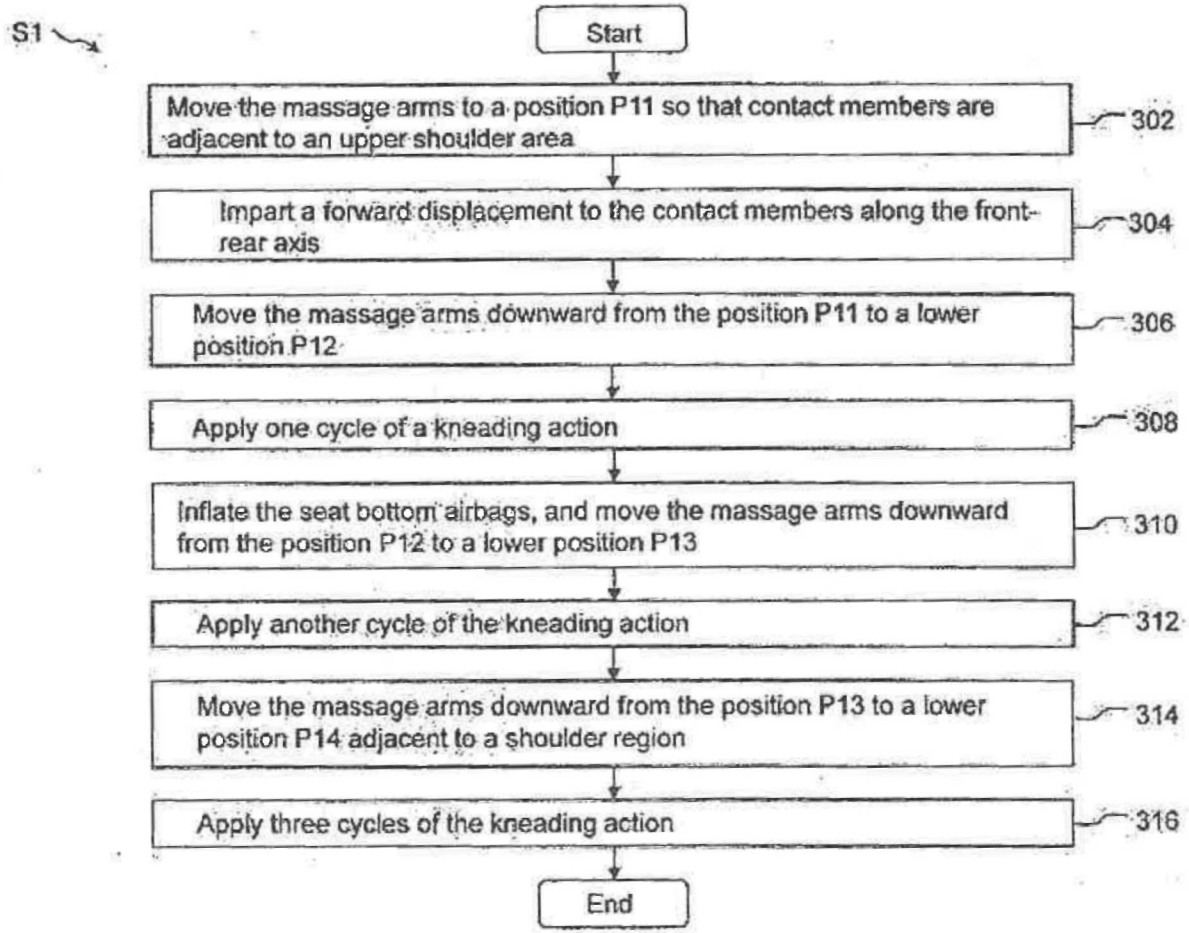
S1
Start
Move the massage arms to a position P11 so that contact members are adjacent to an upper shoulder area
302
Impart a forward displacement to the contact members along the front-rear axis
304
Move the massage arms downward from the position P11 to a lower position P12
306
Apply one cycle of a kneading action
308
Inflate the seat bottom airbags, and move the massage arms downward from the position P12 to a lower position P13
310
Apply another cycle of the kneading action
312
Move the massage arms downward from the position P13 to a lower position P14 adjacent to a shoulder region
314
Apply three cycles of the kneading action
316
End

FIG. 10

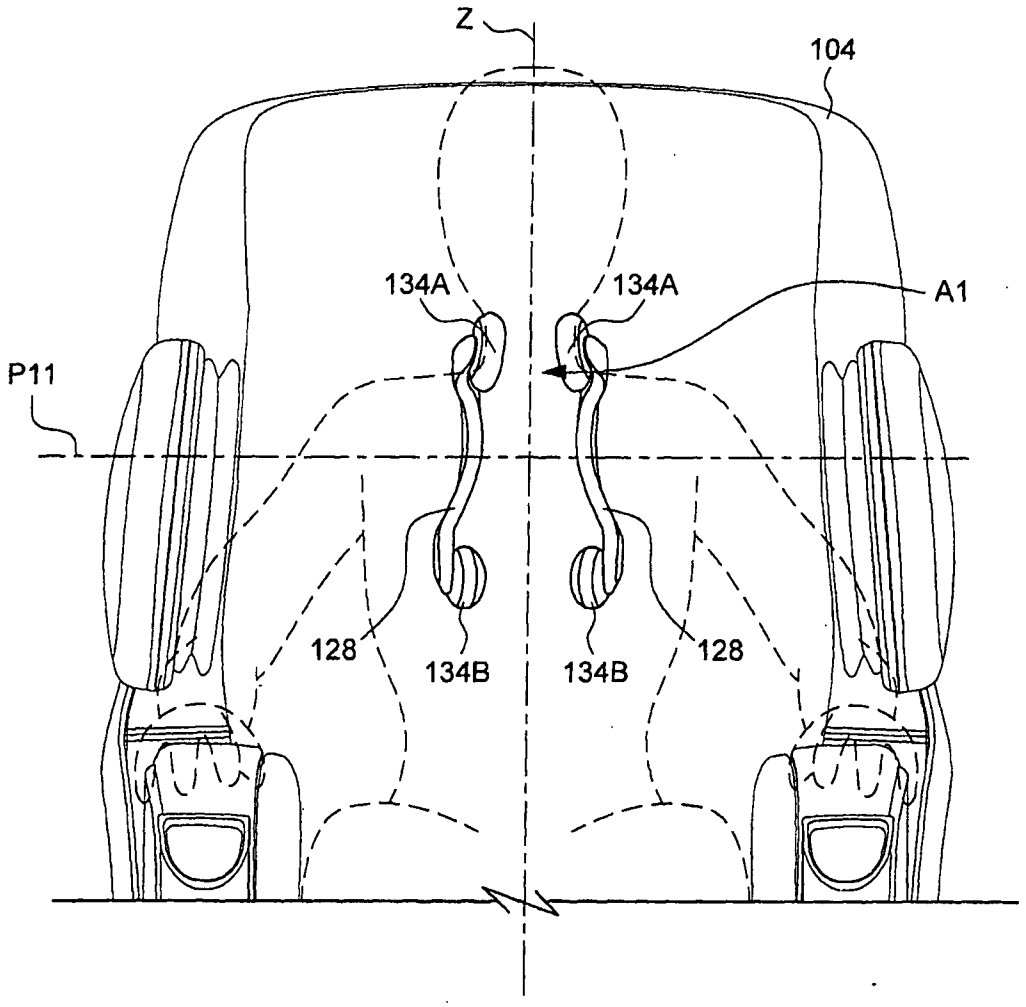

FIG. 11A

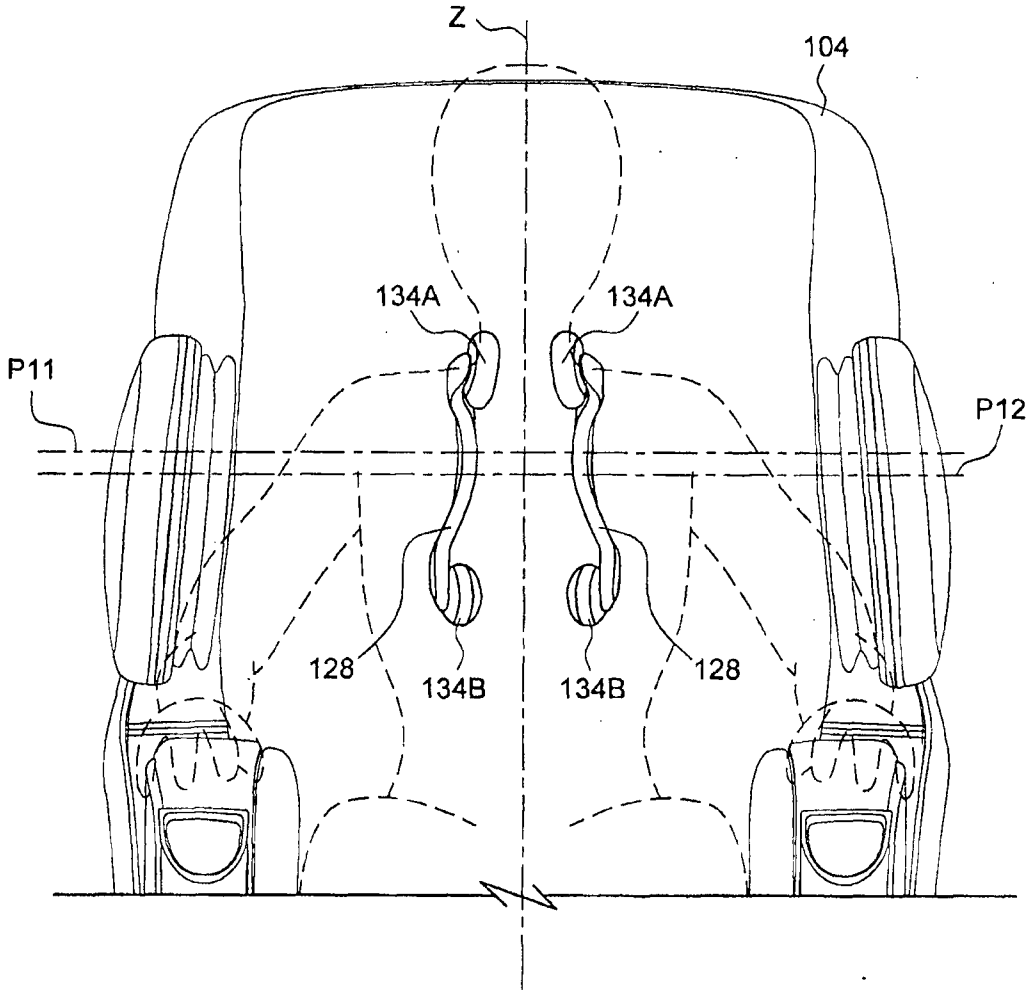

FIG. 11B

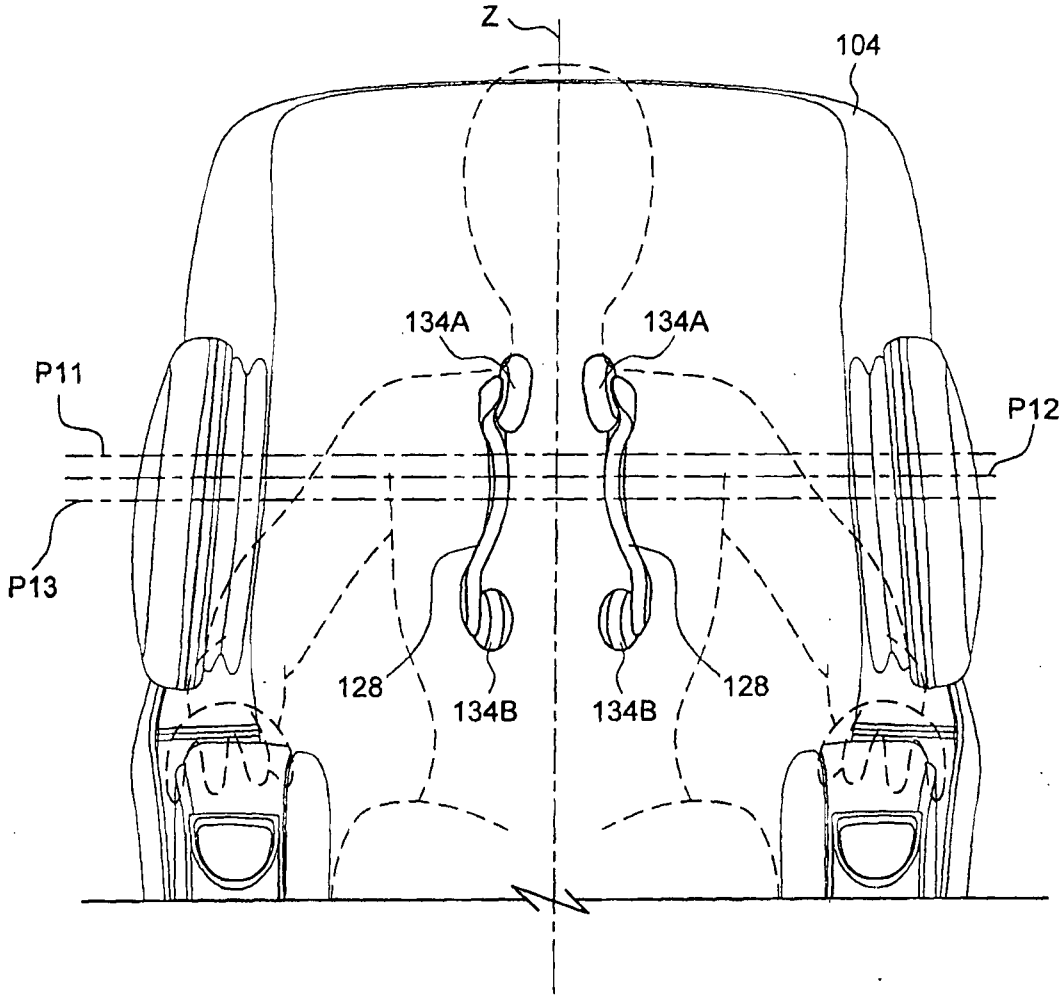

FIG. 11C

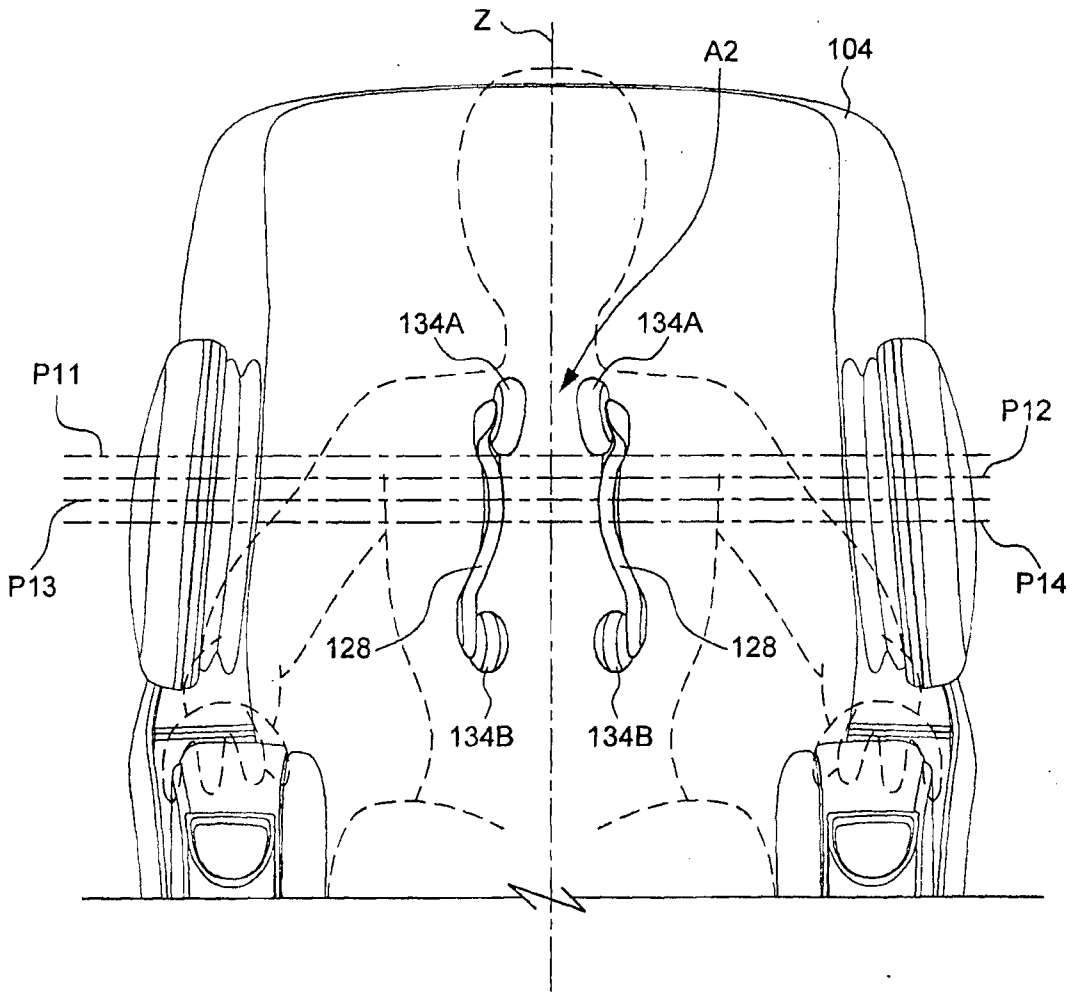

FIG. 11D

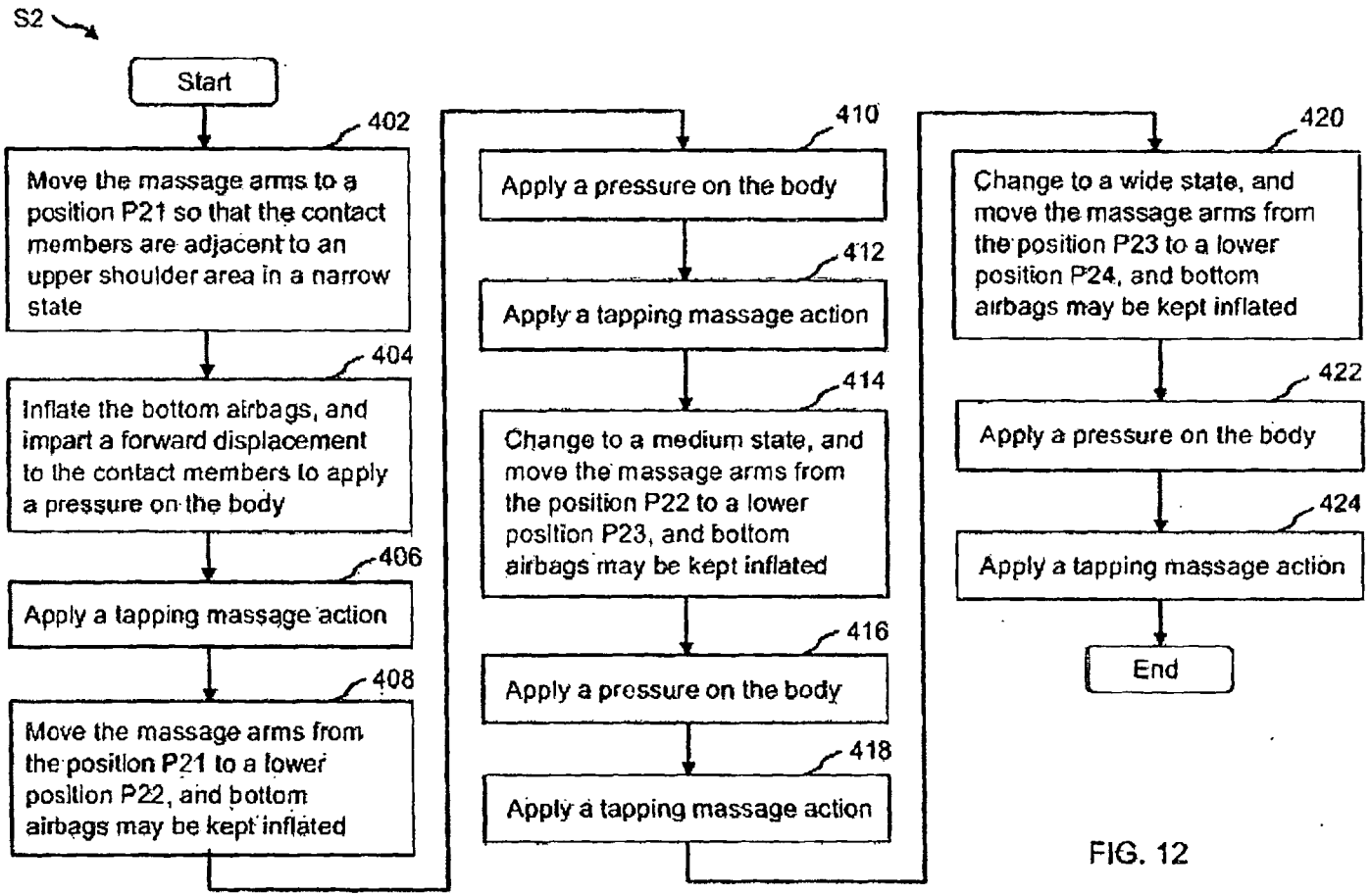
S2
Start
402
Move the massage arms to a position P21 so that the contact members are adjacent to an upper shoulder area in a narrow state
404
Inflate the bottom airbags, and impart a forward displacement to the contact members to apply a pressure on the body
406
Apply a tapping massage action
408
Move the massage arms from the position P21 to a lower position P22, and bottom airbags may be kept inflated
410
Apply a pressure on the body
412
Apply a tapping massage action
414
Change to a medium state, and move the massage arms from the position P22 to a lower position P23, and bottom airbags may be kept inflated
416
Apply a pressure on the body
418
Apply a tapping massage action
420
Change to a wide state, and move the massage arms from the position P23 to a lower position P24, and bottom airbags may be kept inflated
422
Apply a pressure on the body
424
Apply a tapping massage action
End

FIG. 12

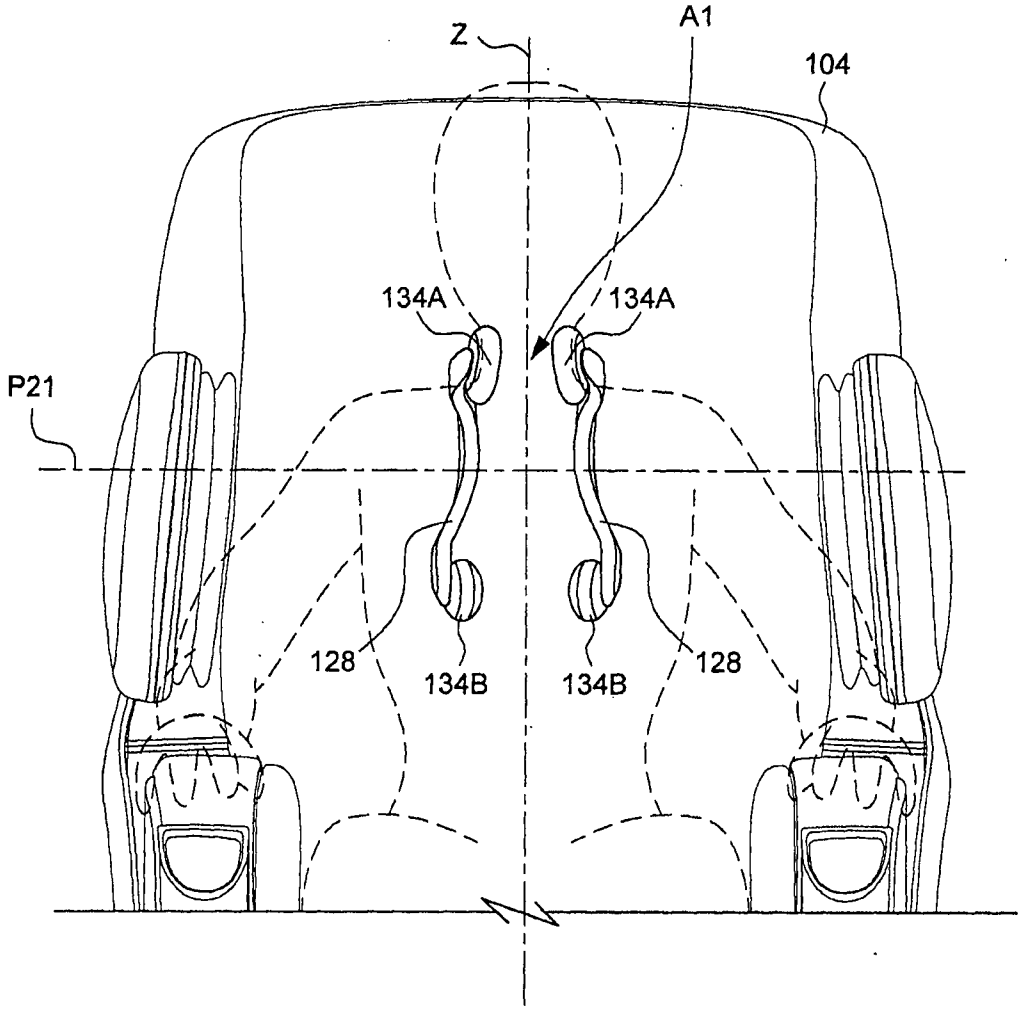

FIG. 13A

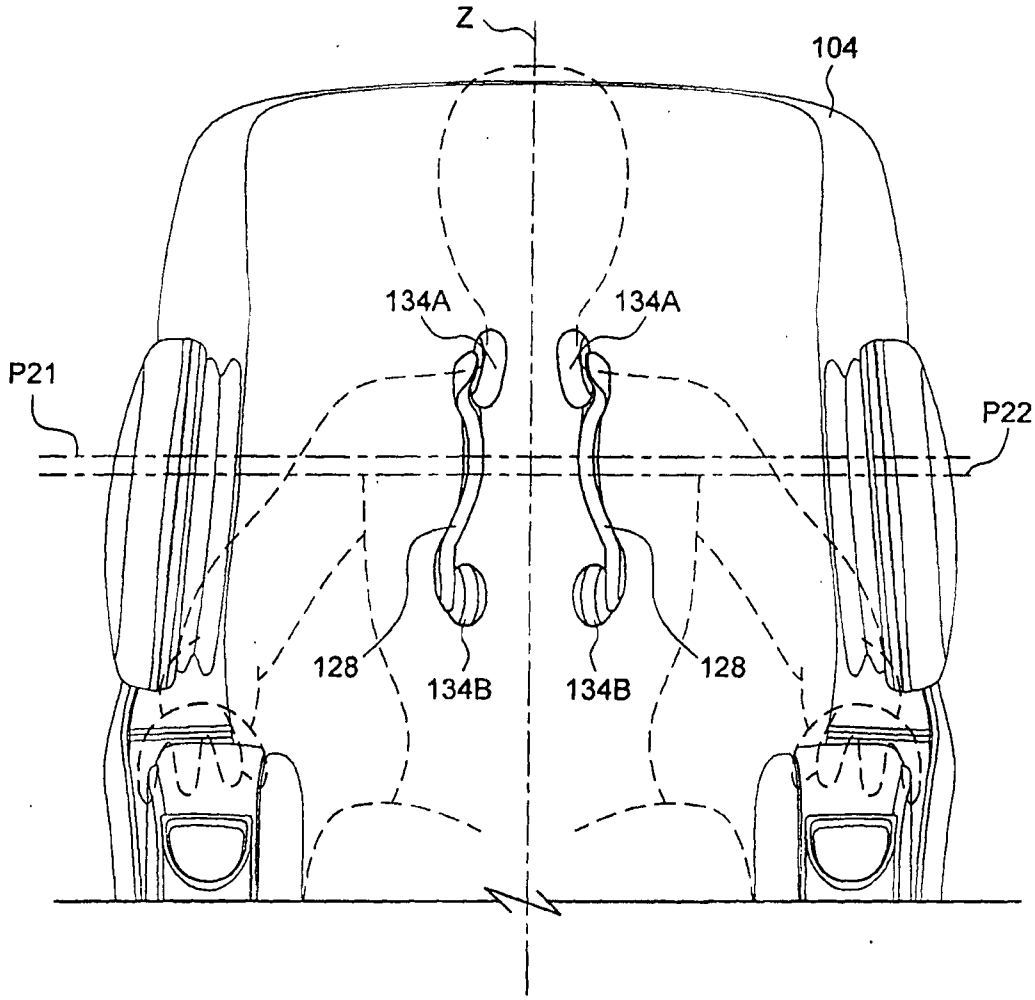

FIG. 13B

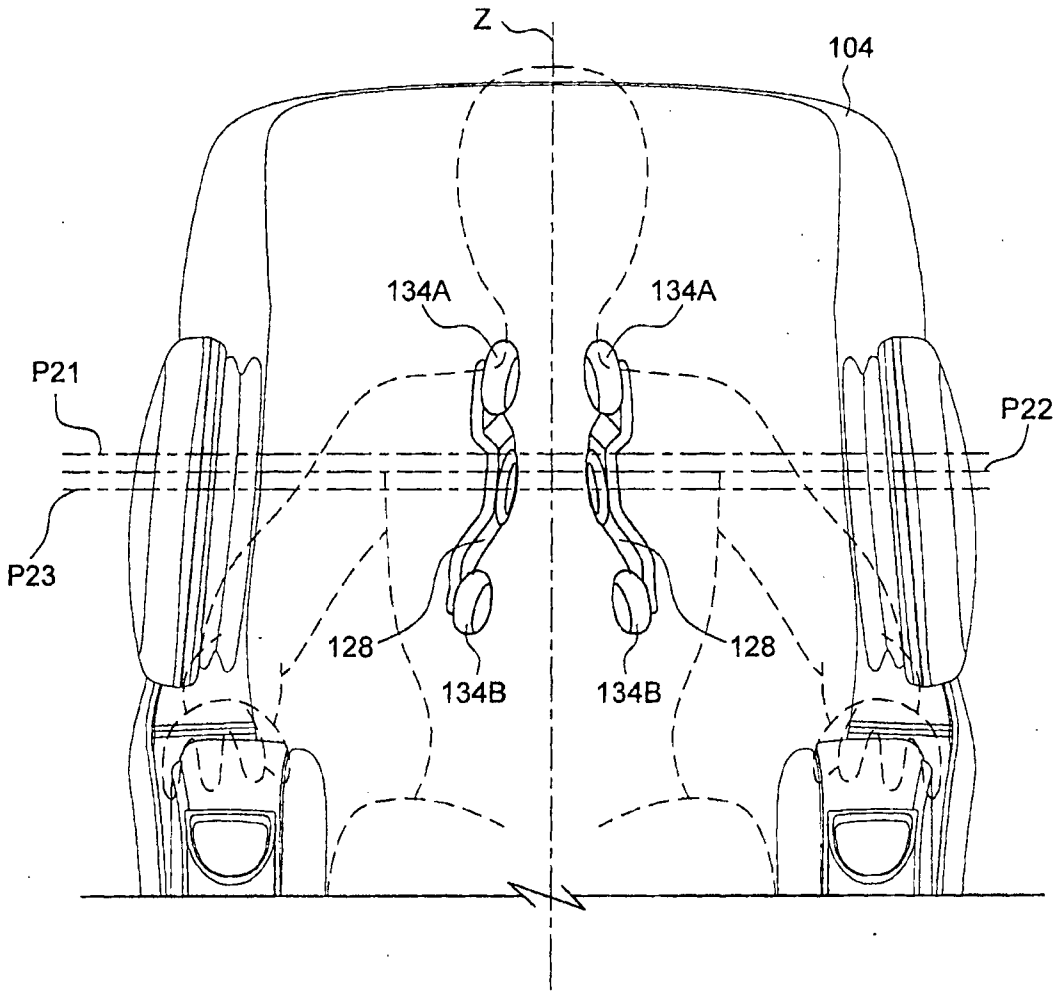

FIG. 13C

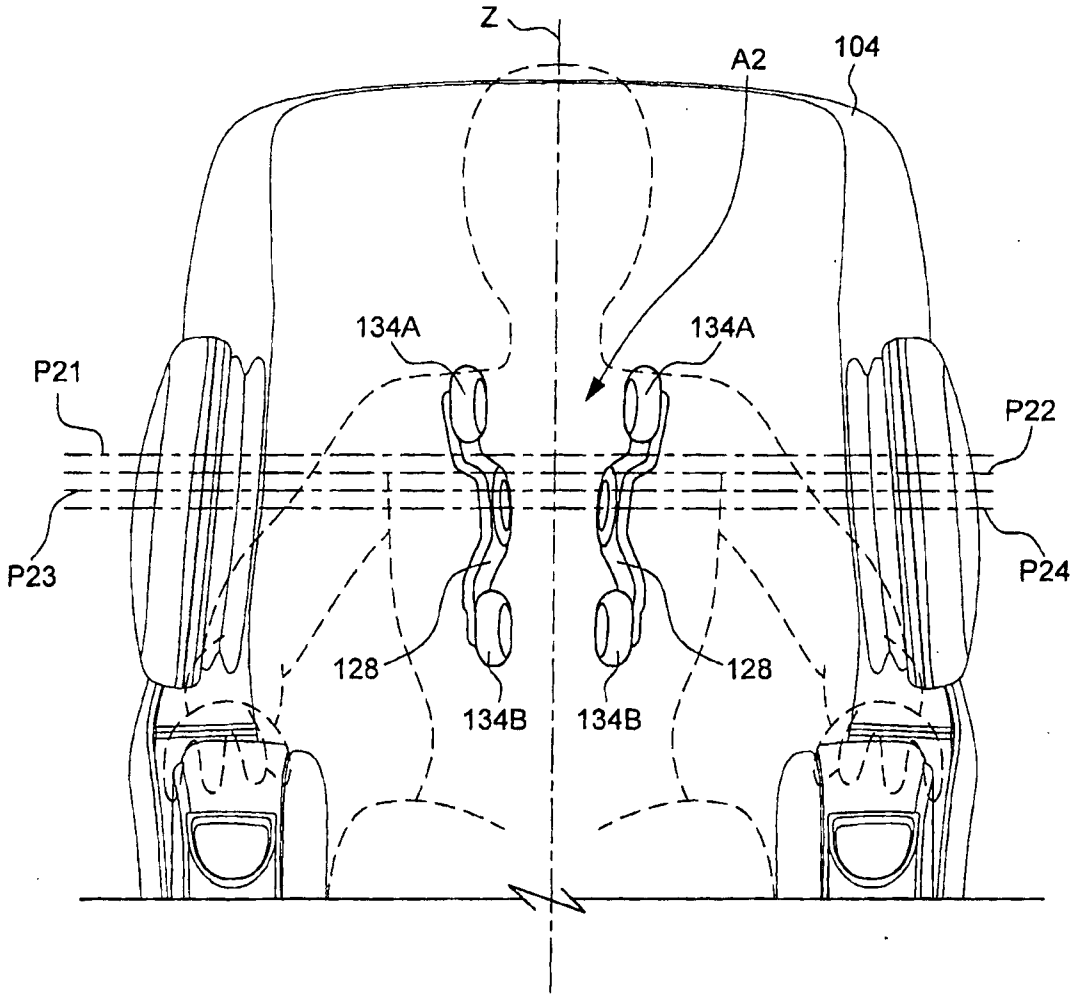

FIG. 13D

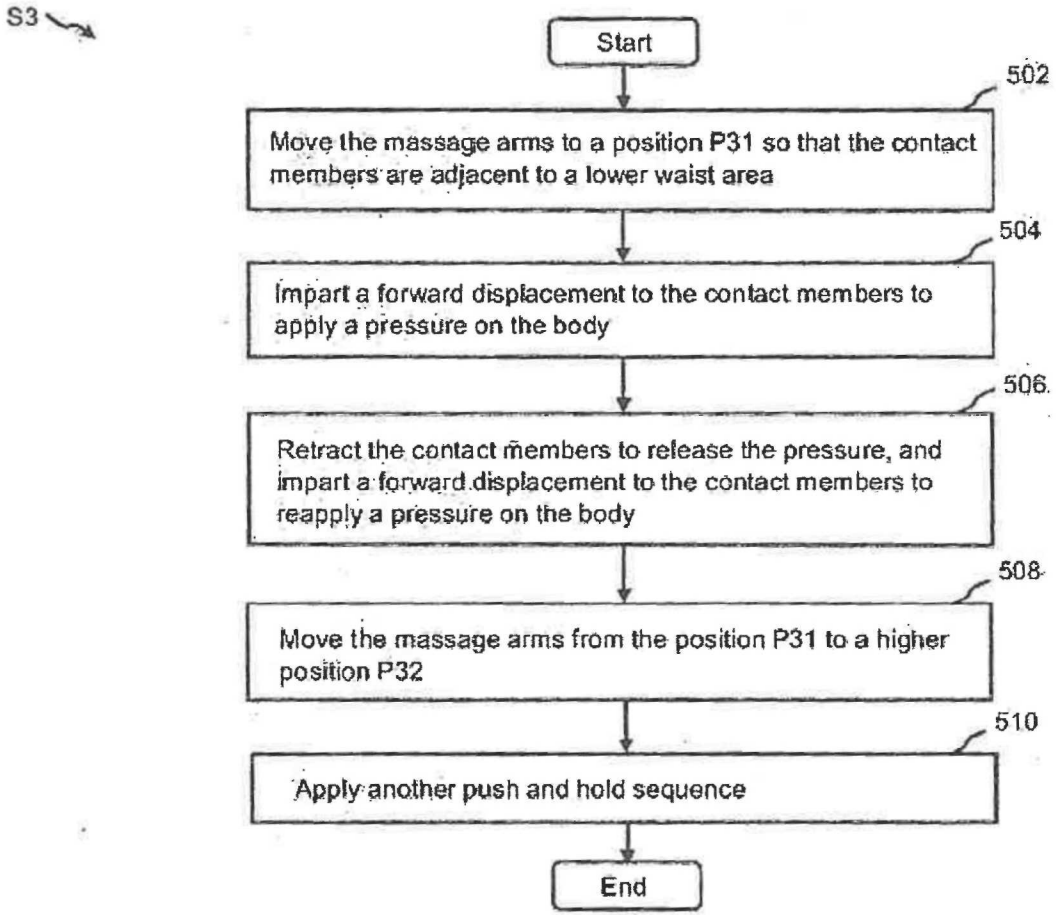
S3
Start
502
Move the massage arms to a position P31 so that the contact members are adjacent to a lower waist area
504
Impart a forward displacement to the contact members to apply a pressure on the body
506
Retract the contact members to release the pressure, and impart a forward displacement to the contact members to reapply a pressure on the body
508
Move the massage arms from the position P31 to a higher position P32
510
Apply another push and hold sequence
End

FIG. 14

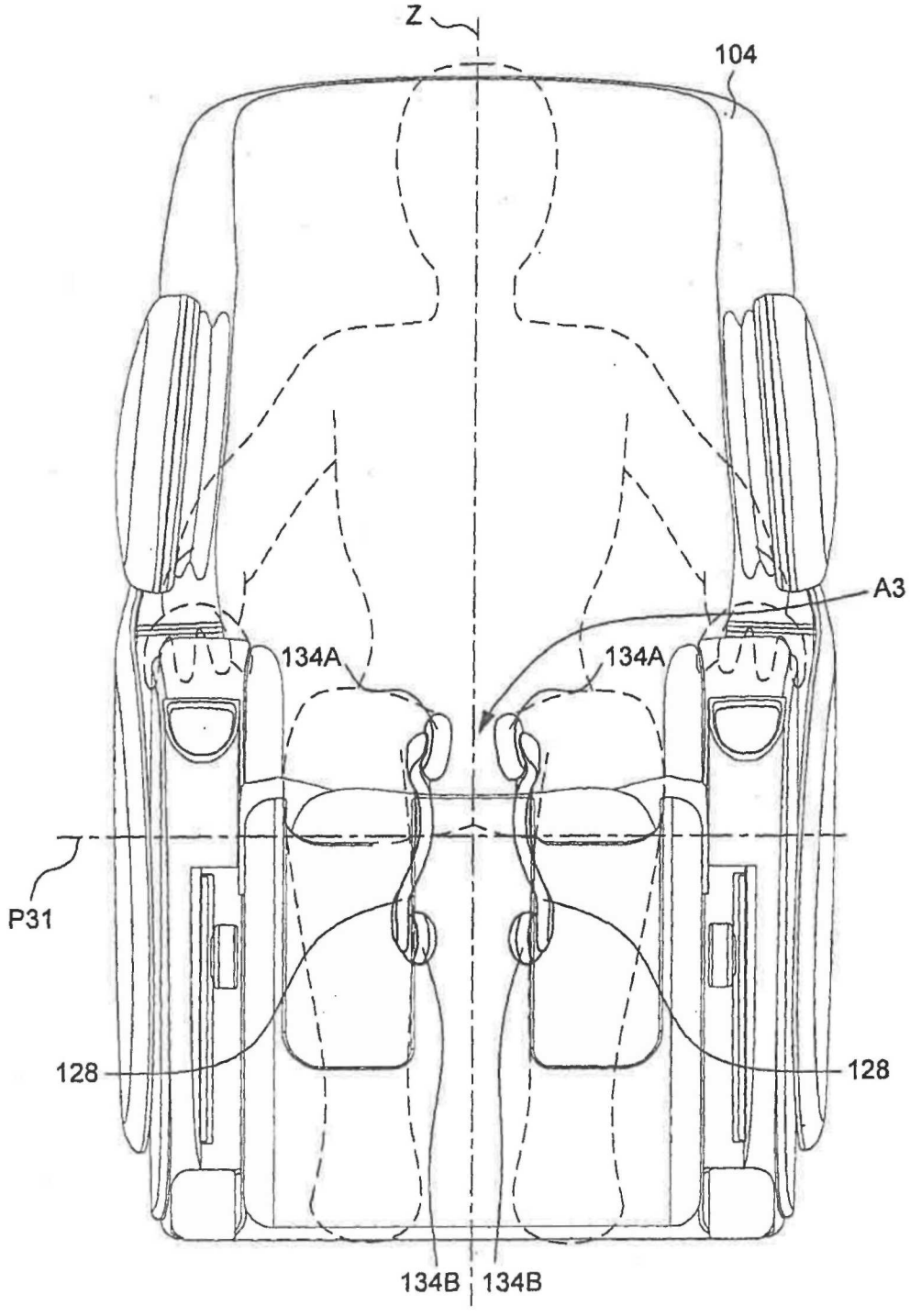

FIG. 15A

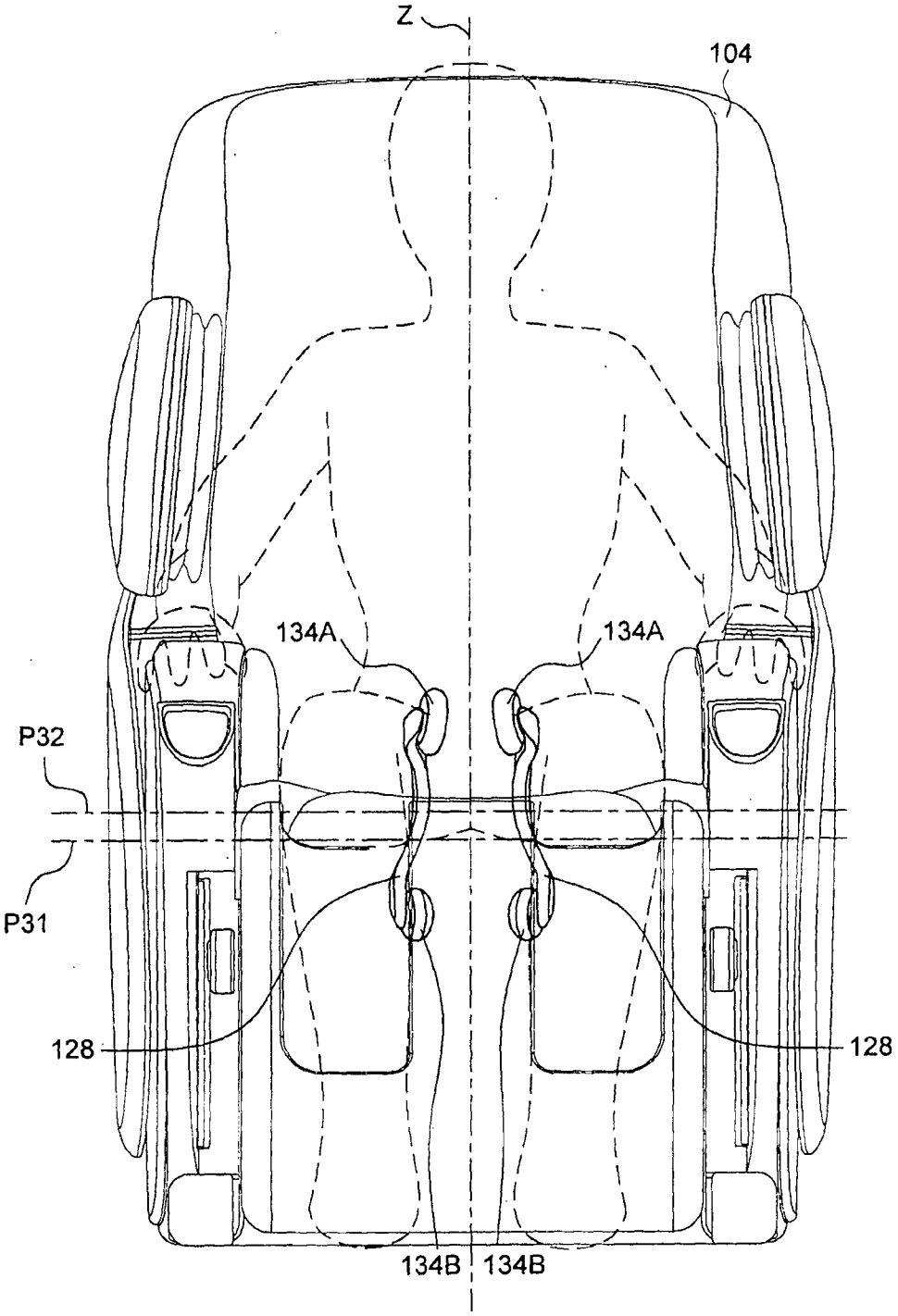

FIG. 15B

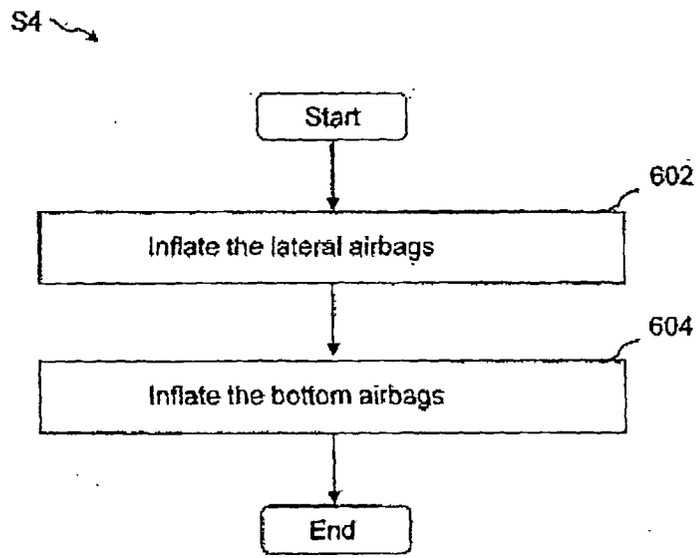
S4
Start
602
Inflate the lateral airbags
604
Inflate the bottom airbags
End

FIG. 16

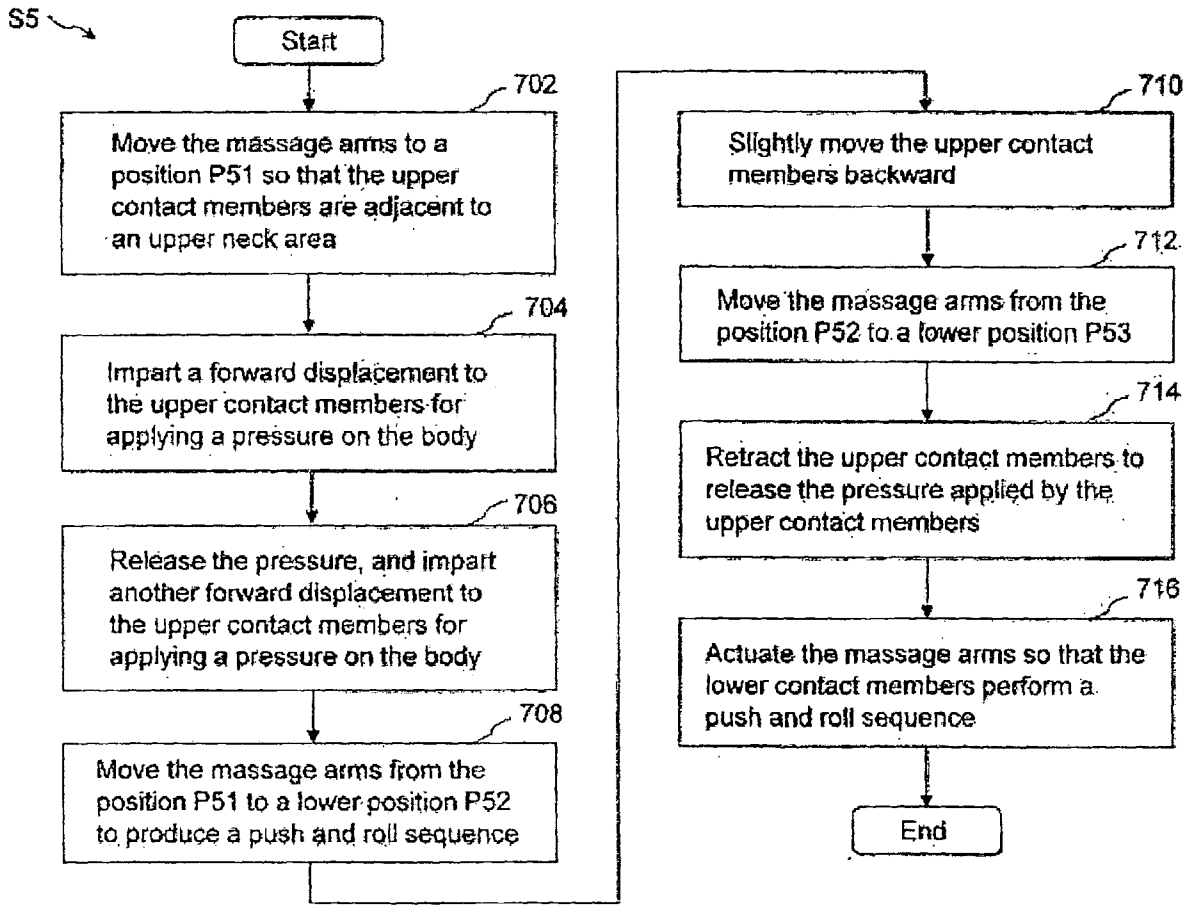
S5
Start
702
Move the massage arms to a position P51 so that the upper contact members are adjacent to an upper neck area
704
Impart a forward displacement to the upper contact members for applying a pressure on the body
706
Release the pressure, and impart another forward displacement to the upper contact members for applying a pressure on the body
708
Move the massage arms from the position P51 to a lower position P52 to produce a push and roll sequence
710
Slightly move the upper contact members backward
712
Move the massage arms from the position P52 to a lower position P53
714
Retract the upper contact members to release the pressure applied by the upper contact members
716
Actuate the massage arms so that the lower contact members perform a push and roll sequence
End

FIG. 17

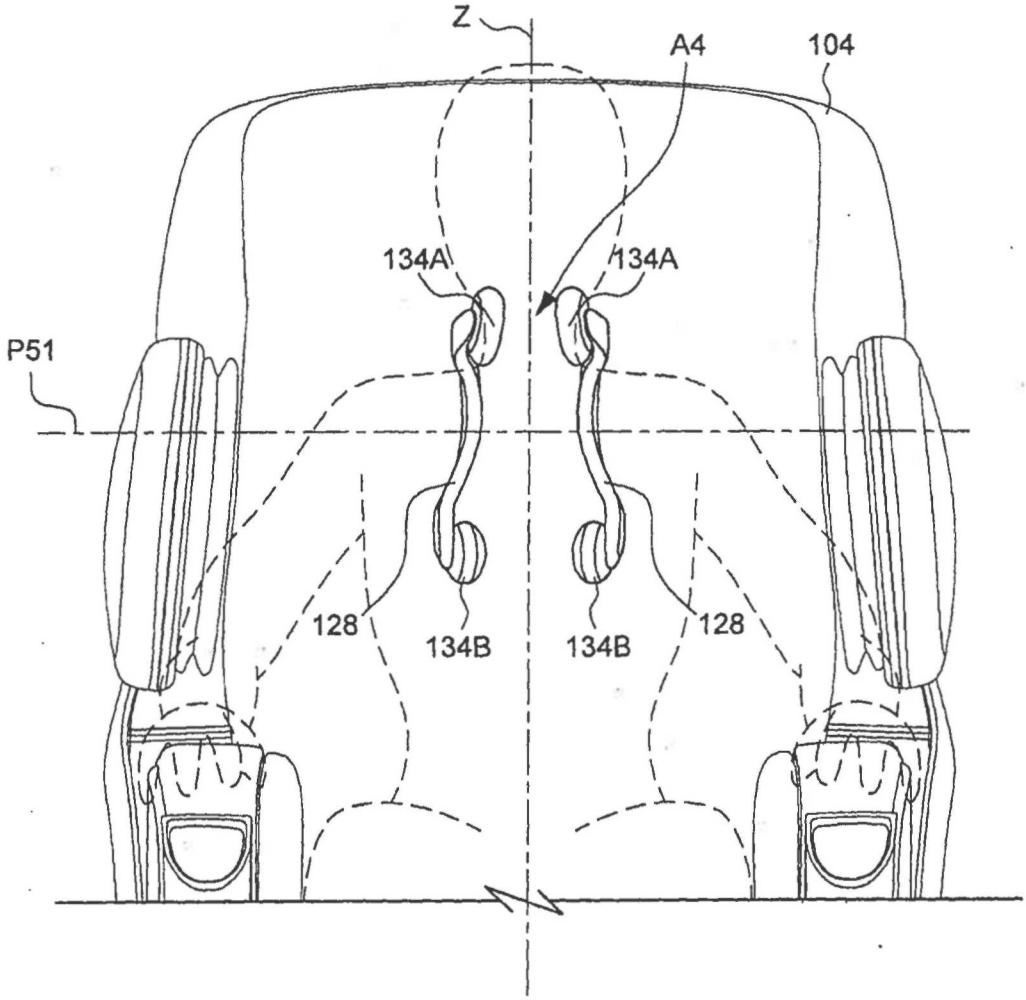

FIG. 18A

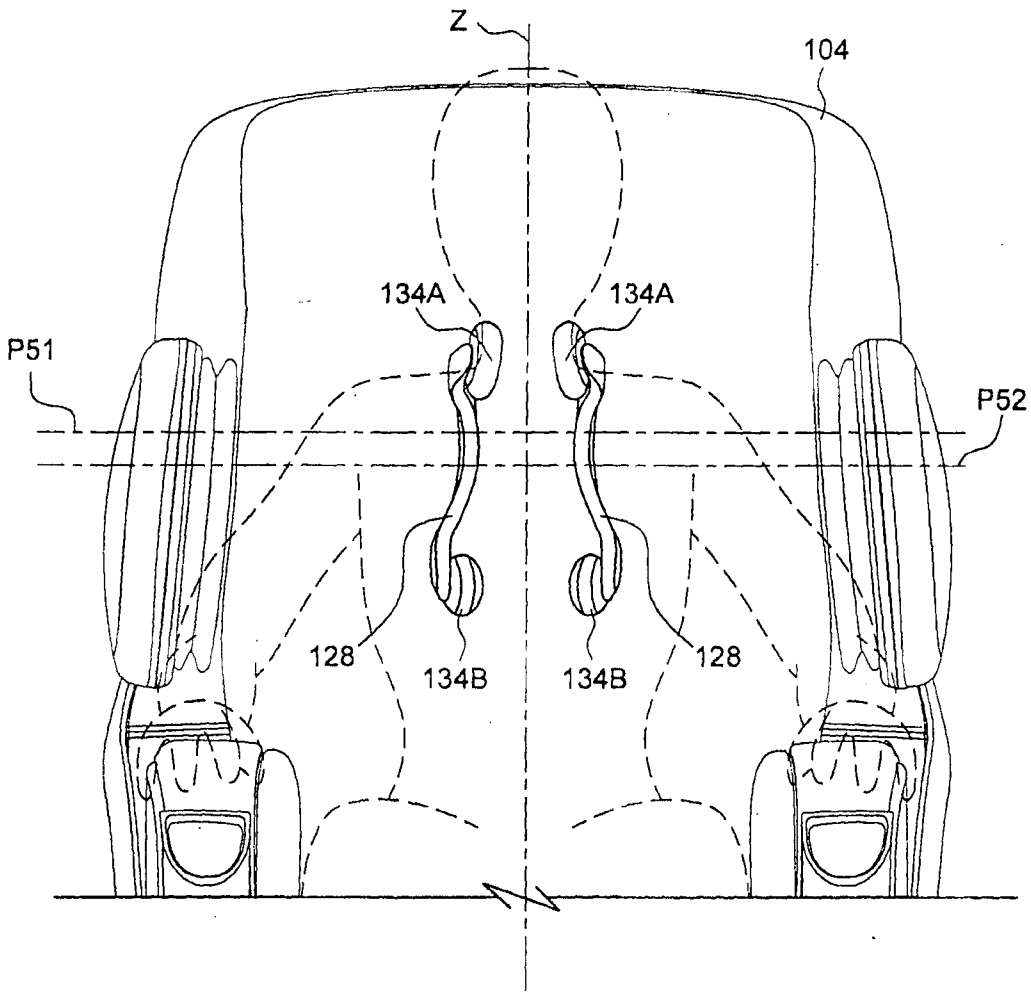

FIG. 18B

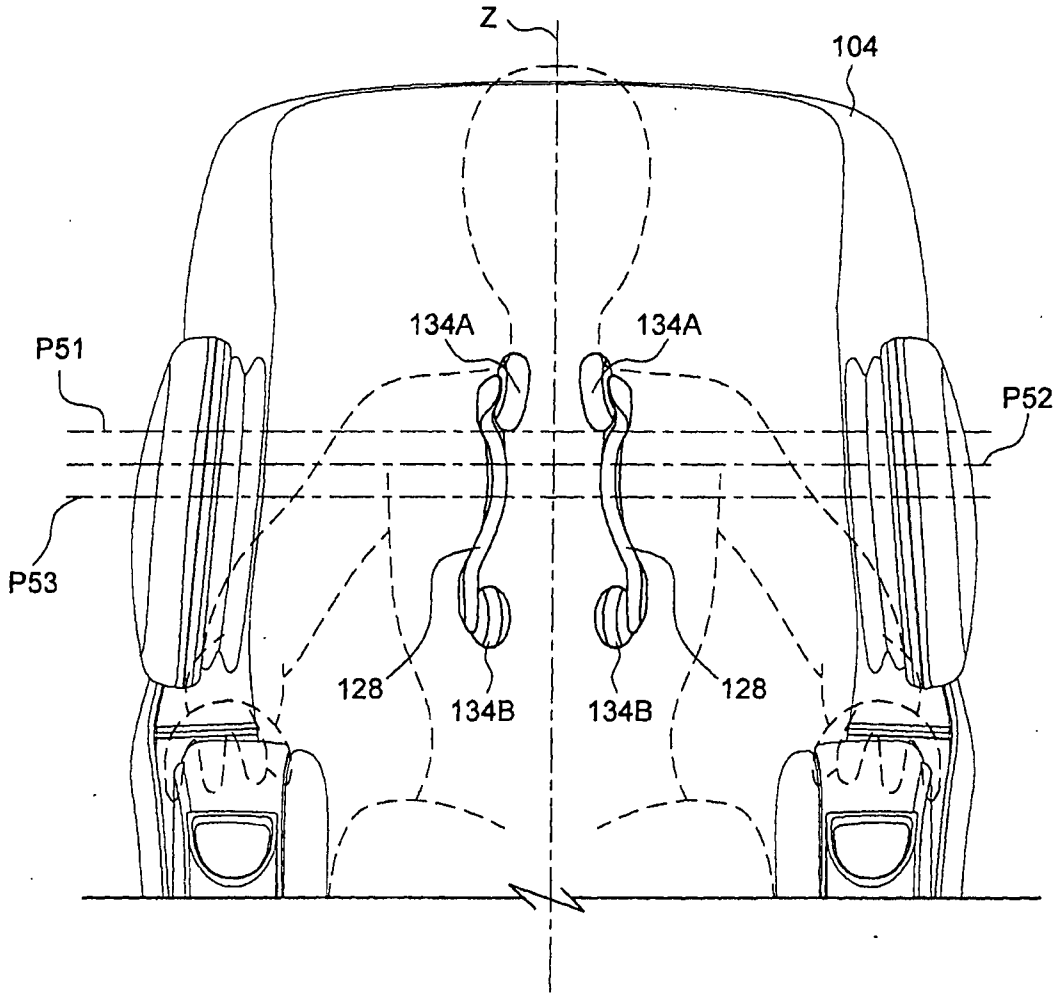

FIG. 18C