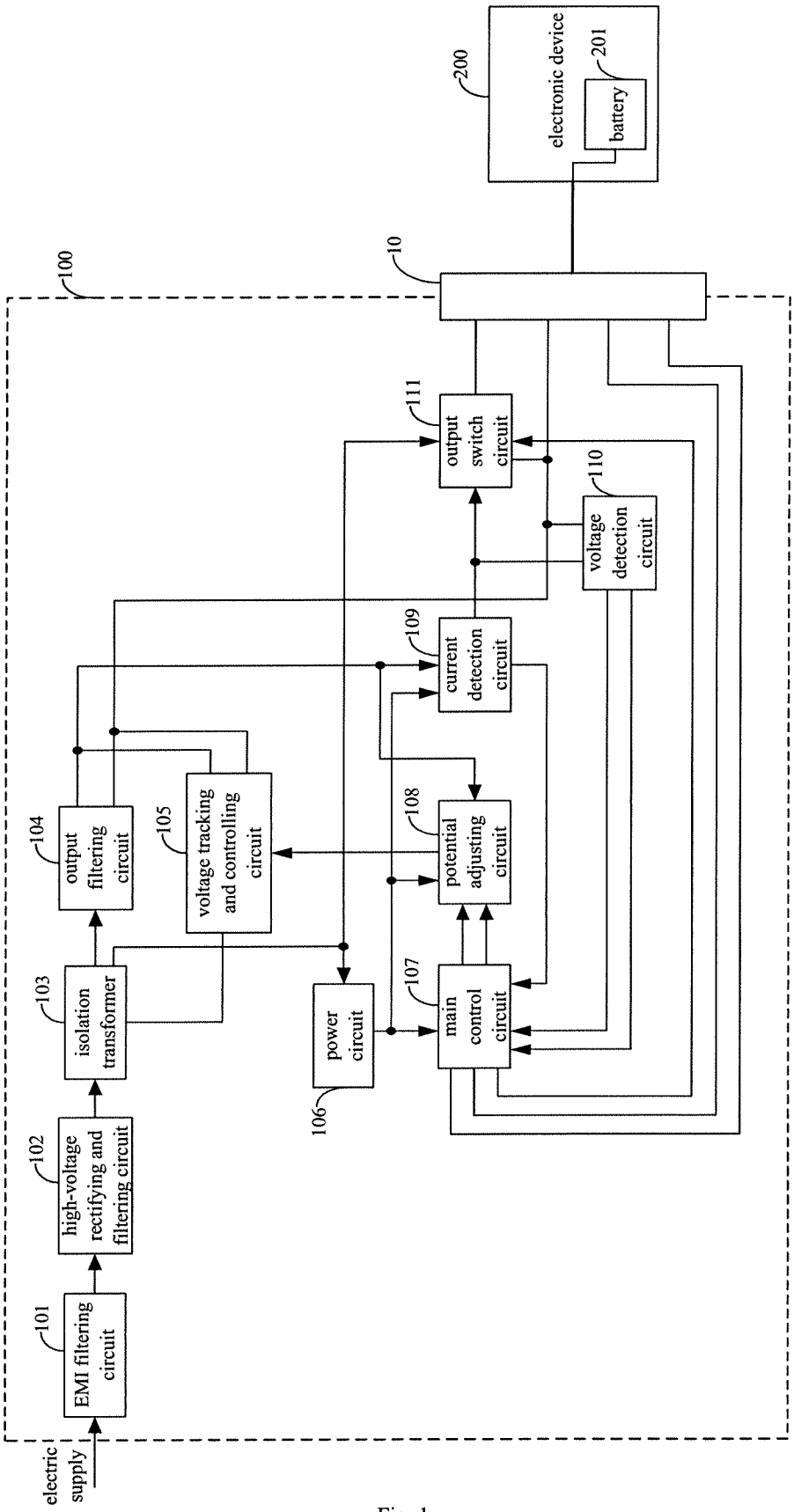
electric supply
100
EMI filtering circuit
101
high-voltage rectifying and filtering circuit
102
isolation transformer
103
output filtering circuit
104
voltage tracking and controlling circuit
105
power circuit
106
main control circuit
107
potential adjusting circuit
108
current detection circuit
109
voltage detection circuit
110
output switch circuit
111
10
electronic device
200
battery
201

Fig. 1

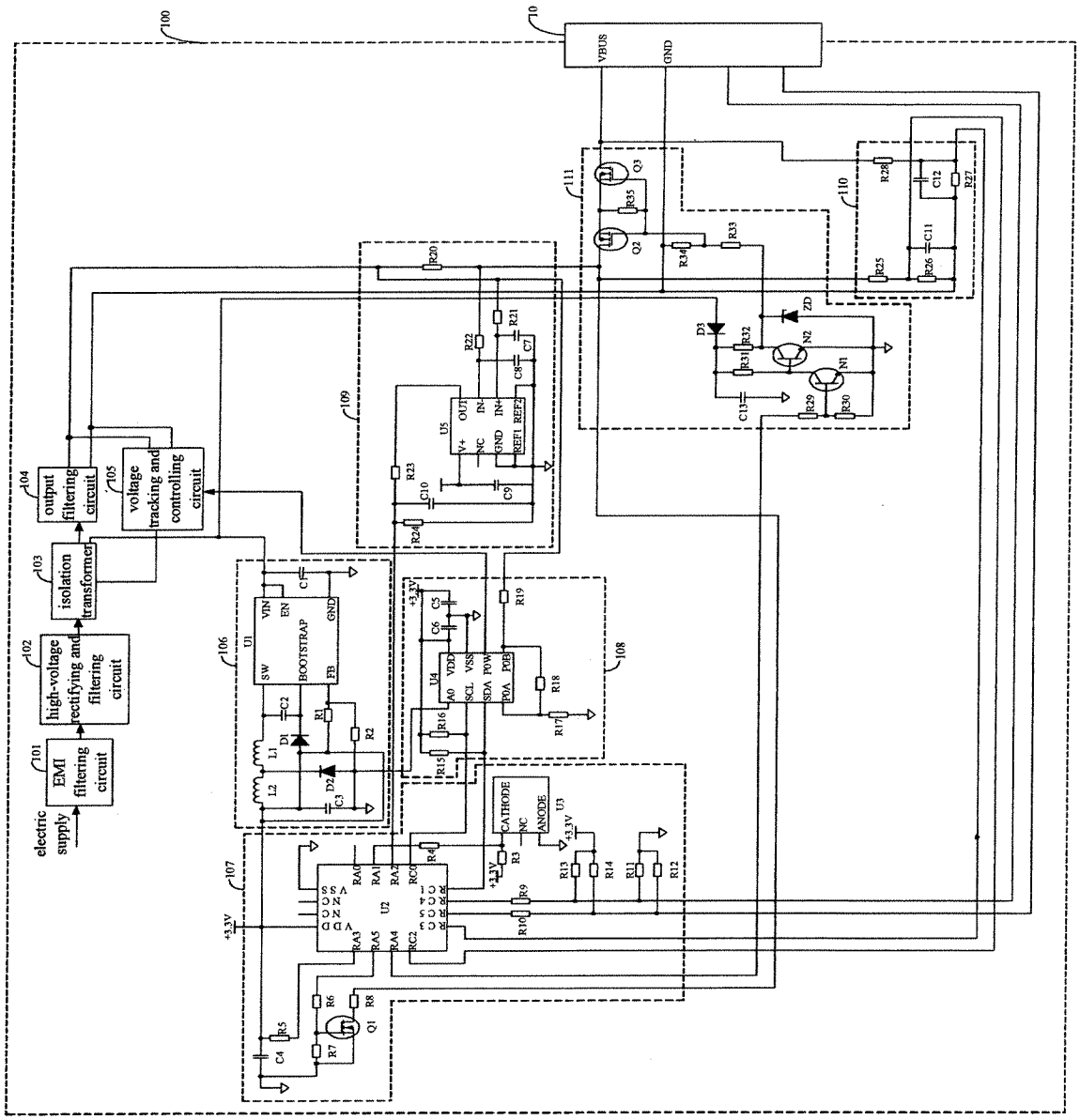
electric supply
EMI filtering circuit
high-voltage rectifying and filtering circuit
isolation transformer
output filtering circuit
voltage tracking and controlling circuit
VBUS
GND
CATHODE
ANODE
BOOTSTRAP
100
101
102
103
104
105
106
107
108
109
110
111
10

Fig. 2