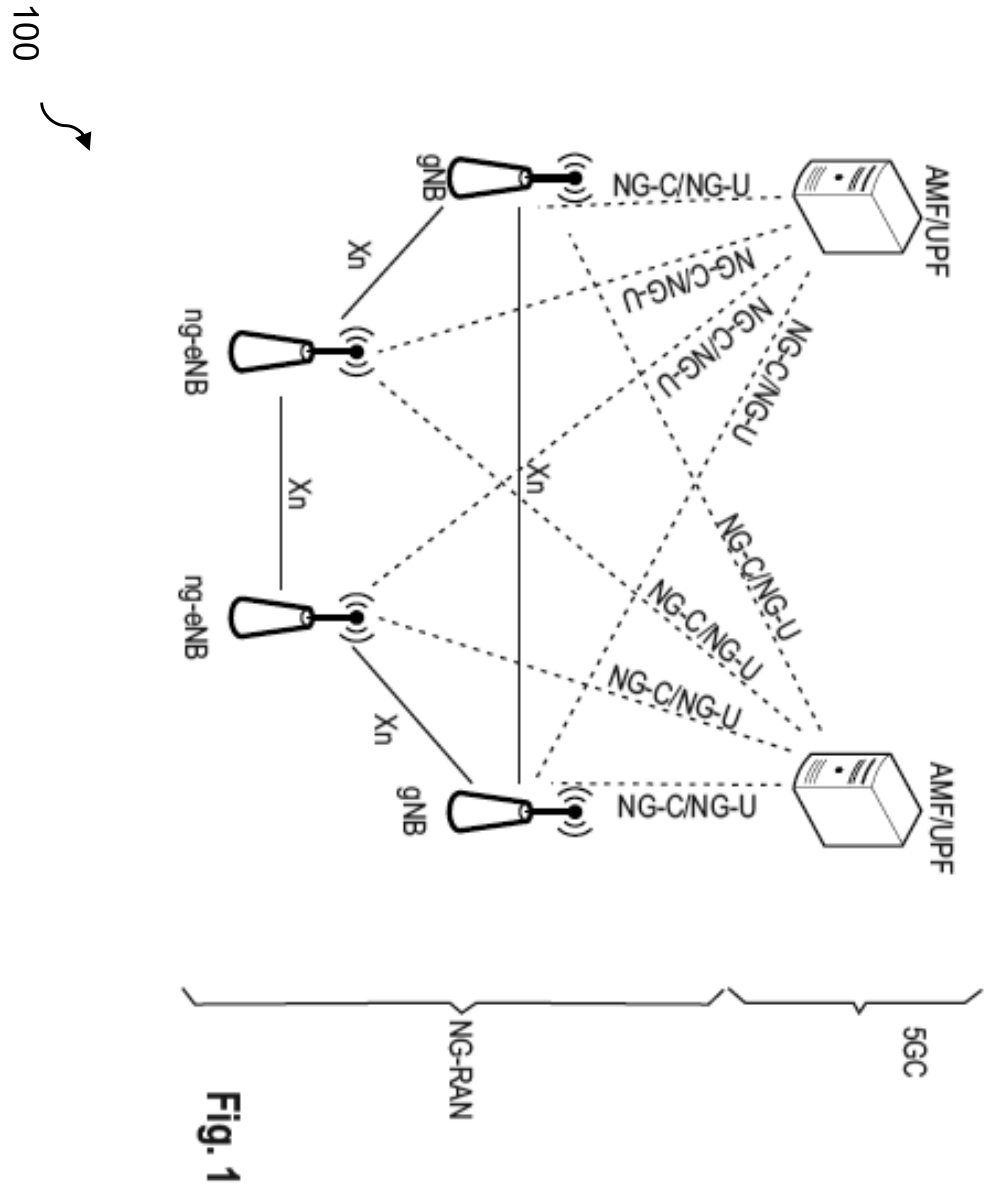
100
gNB
NG-C/NG-U
AMF/UPF
Xn
NG-C/NG-U
NG-C/NG-U
NG-C/NG-U
ng-eNB
Xn
Xn
NG-C/NG-U
NG-C/NG-U
NG-C/NG-U
ng-eNB
Xn
gNB
NG-C/NG-U
AMF/UPF
NG-RAN
5GC

Fig. 1

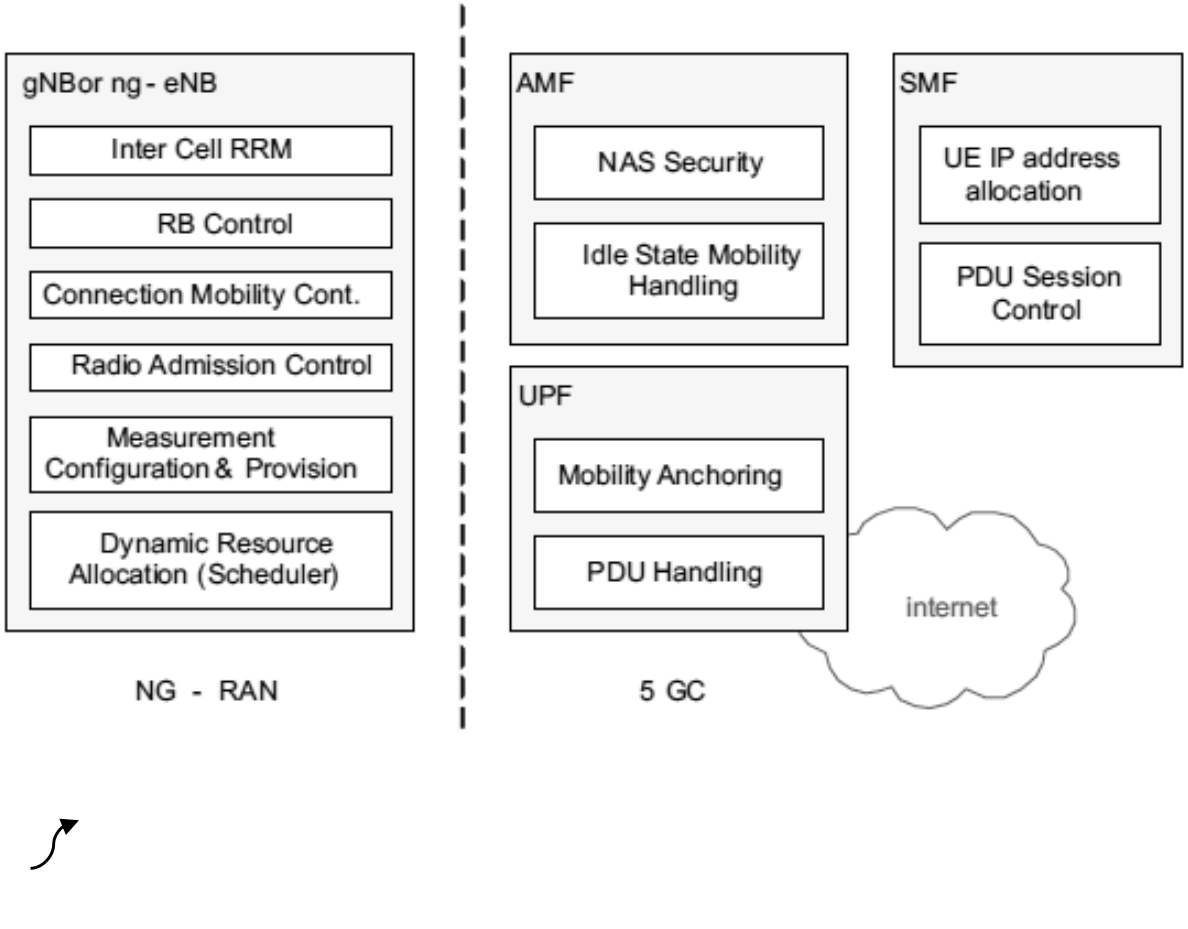
gNBor ng - eNB
Inter Cell RRM
RB Control
Connection Mobility Cont.
Radio Admission Control
Measurement Configuration & Provision
Dynamic Resource Allocation (Scheduler)
NG - RAN
AMF
NAS Security
Idle State Mobility Handling
SMF
UE IP address allocation
PDU Session Control
UPF
Mobility Anchoring
PDU Handling
internet
5 GC
200

Fig. 2

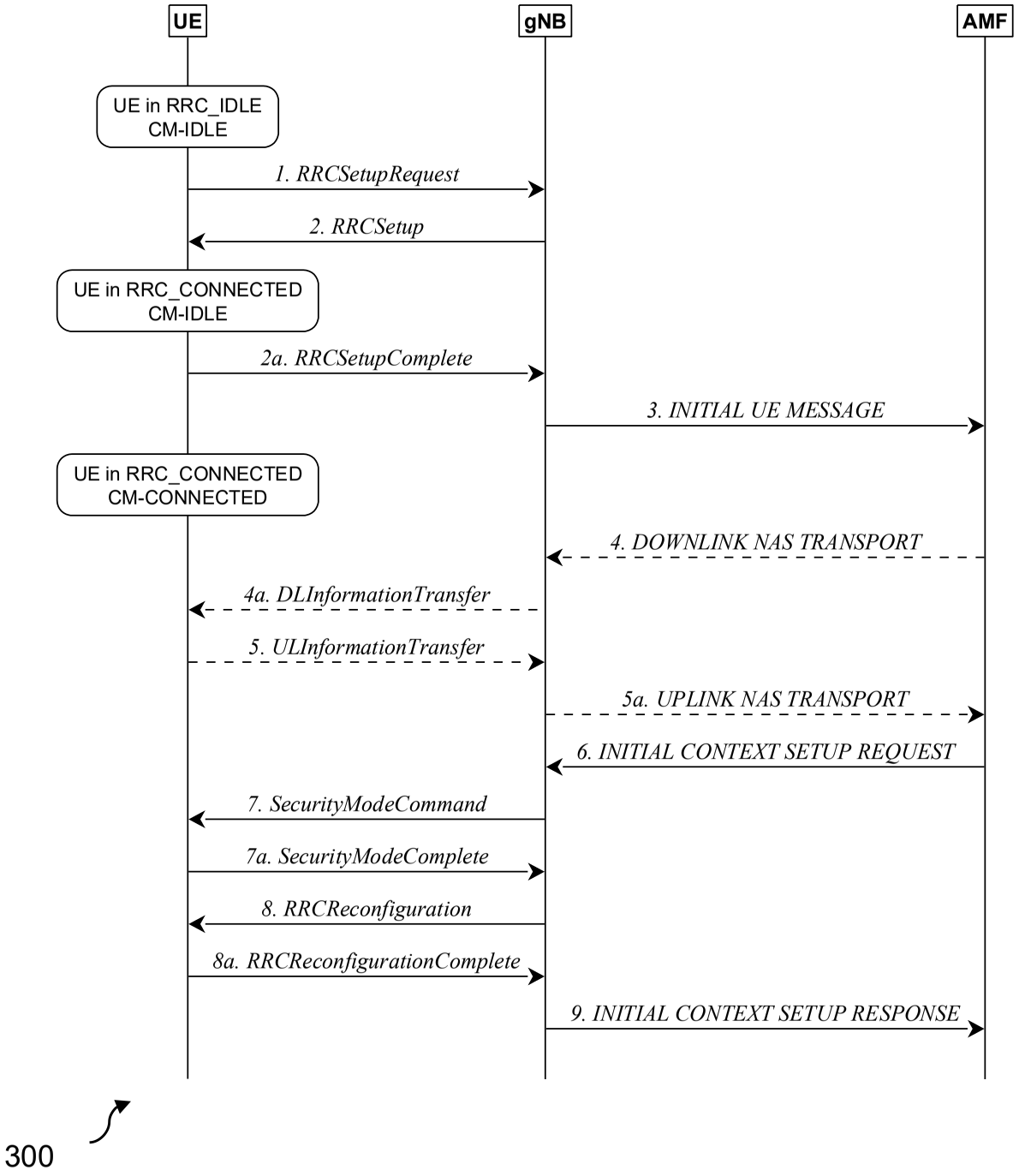
UE
gNB
AMF
UE in RRC_IDLE
CM-IDLE
1. RRCSetupRequest
2. RRCSetup
UE in RRC_CONNECTED
CM-IDLE
2a. RRCSetupComplete
3. INITIAL UE MESSAGE
UE in RRC_CONNECTED
CM-CONNECTED
4. DOWNLINK NAS TRANSPORT
4a. DLInformationTransfer
5. ULInformationTransfer
5a. UPLINK NAS TRANSPORT
6. INITIAL CONTEXT SETUP REQUEST
7. SecurityModeCommand
7a. SecurityModeComplete
8. RRCReconfiguration
8a. RRCReconfigurationComplete
9. INITIAL CONTEXT SETUP RESPONSE
300

Fig. 3

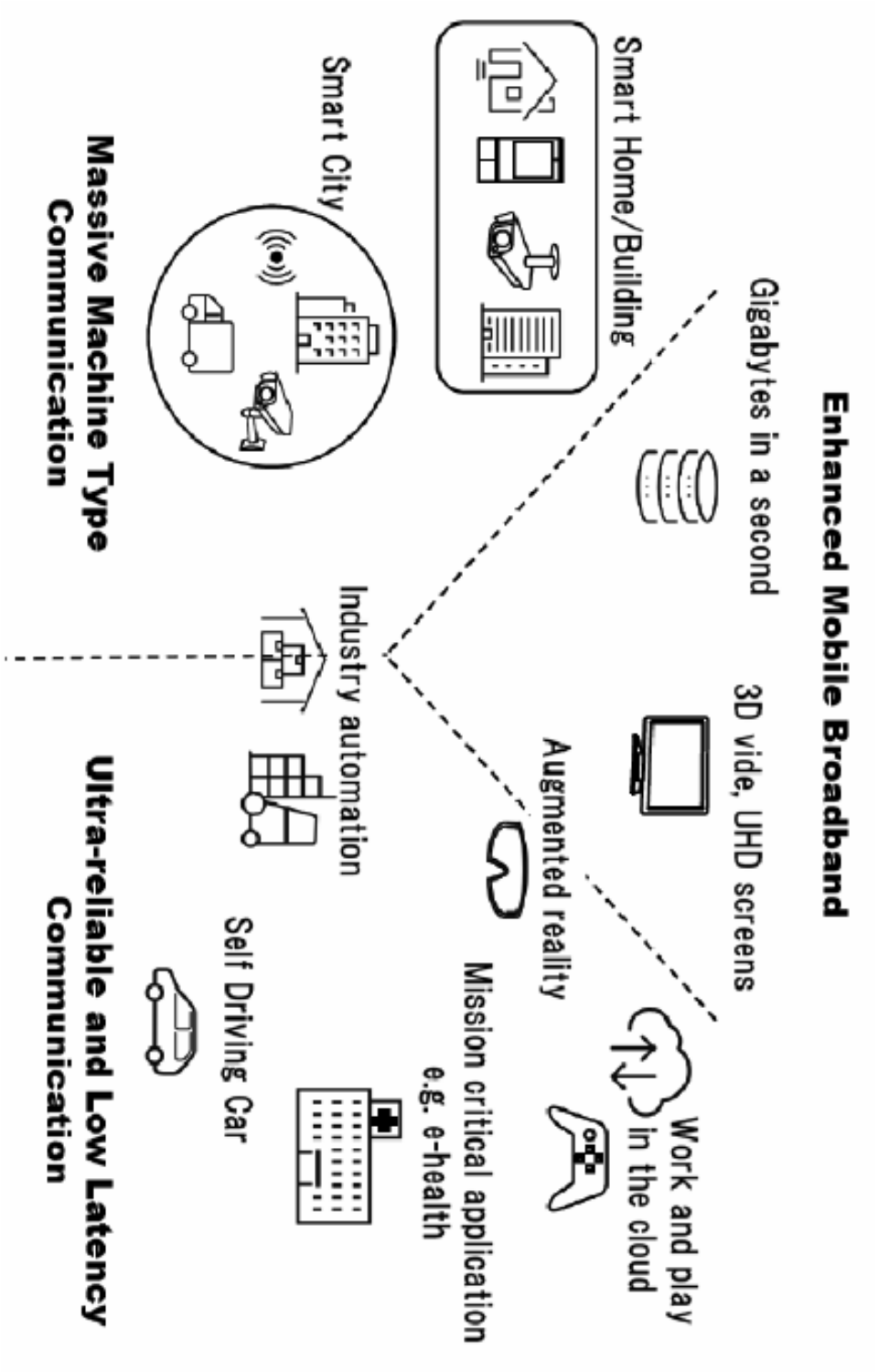
Enhanced Mobile Broadband
Gigabytes in a second
3D vide, UHD screens
Work and play in the cloud
Augmented reality
Mission critical application e.g. e-health
Smart Home/Building
Smart City
Industry automation
Self Driving Car
Massive Machine Type Communication
Ultra-reliable and Low Latency Communication
400

Fig. 4

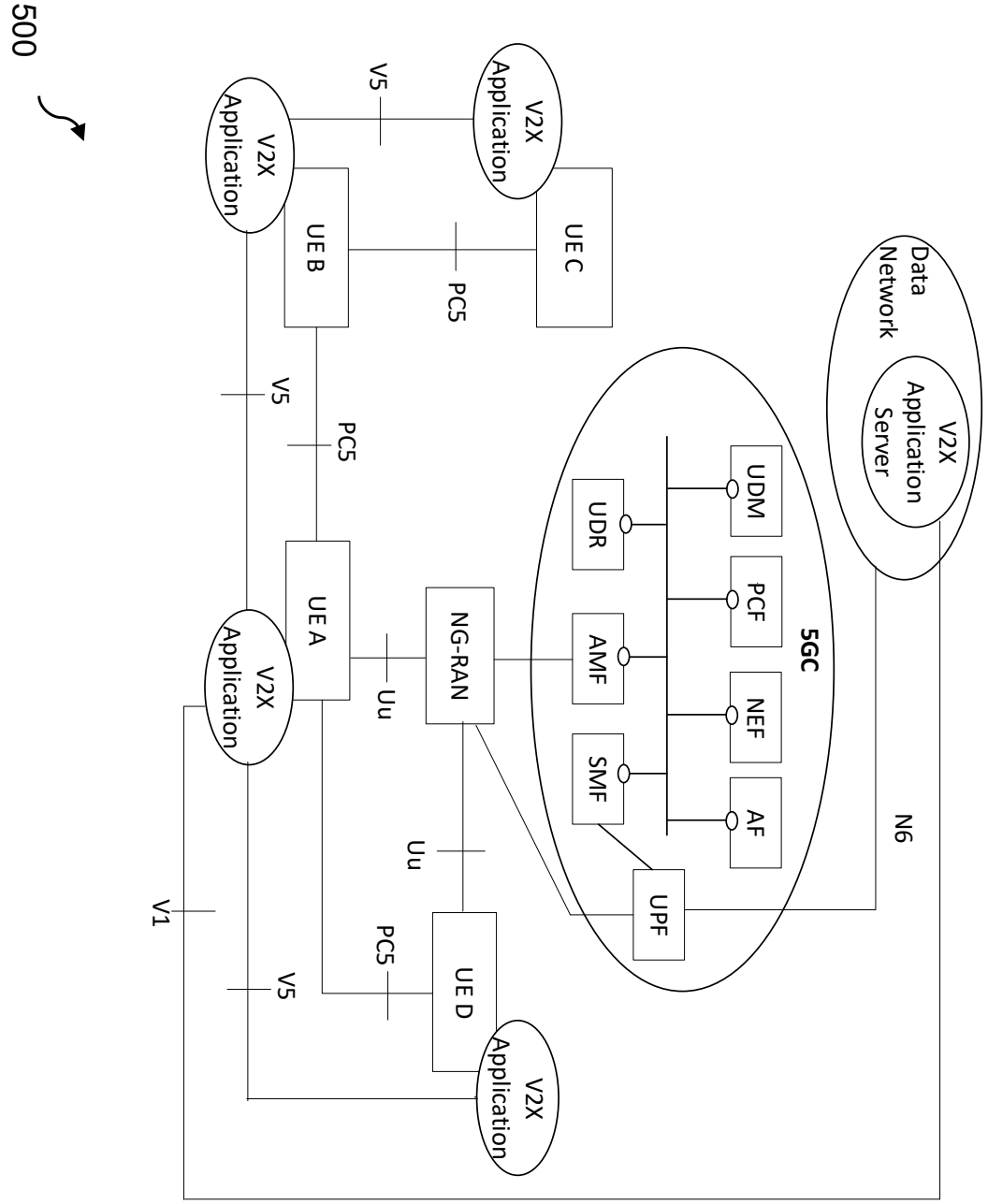
500
Data Network
V2X Application Server
N6
5GC
UDM
PCF
NEF
AF
UDR
AMF
SMF
UPF
NG-RAN
Uu
Uu
UE A
UE B
UE C
UE D
V2X Application
V2X Application
V2X Application
V2X Application
V5
V5
V5
PC5
PC5
PC5
V1

Fig. 5

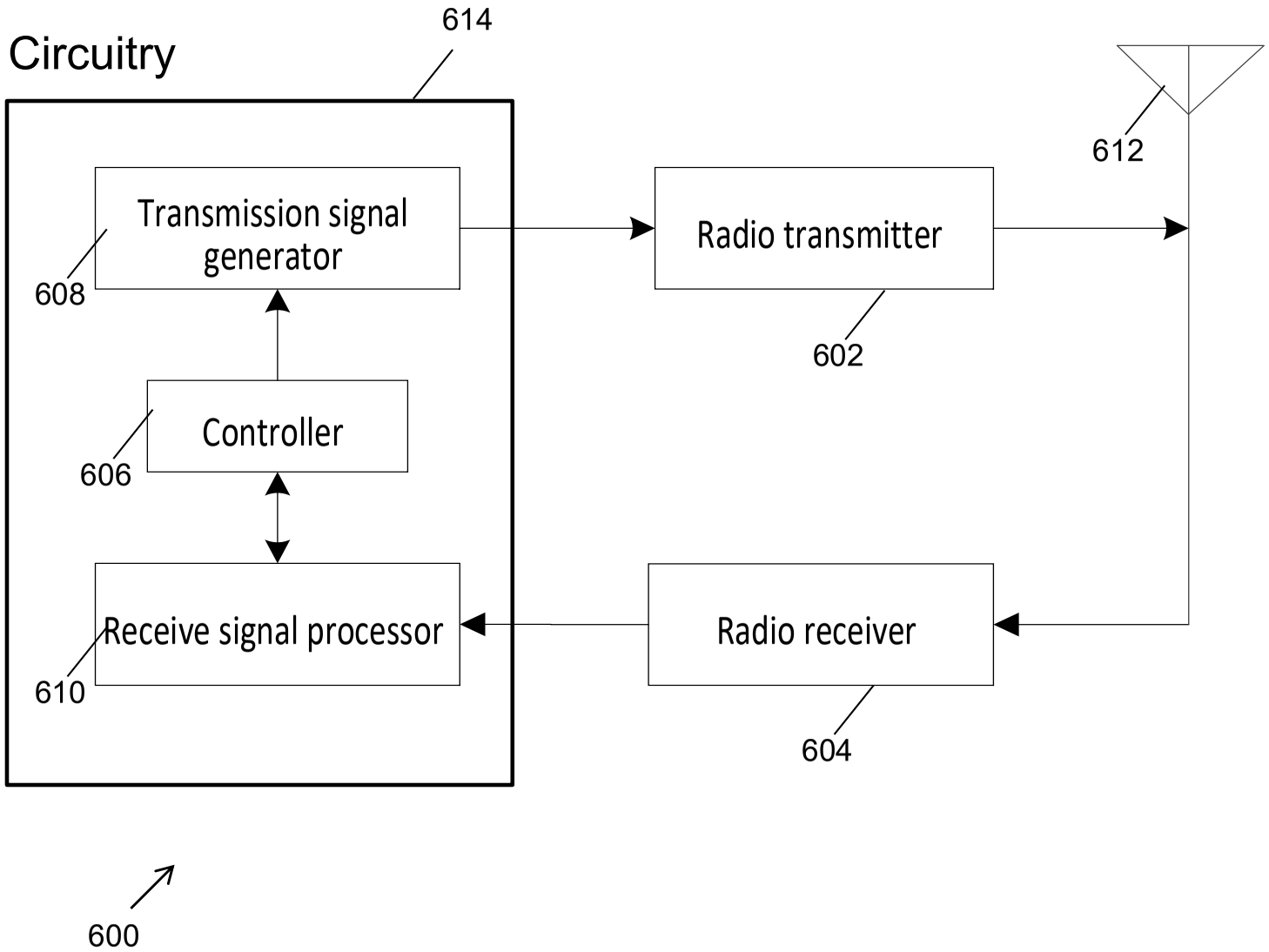
Circuitry
614
Transmission signal generator
608
Controller
606
Receive signal processor
610
Radio transmitter
602
Radio receiver
604
612
600

Fig. 6

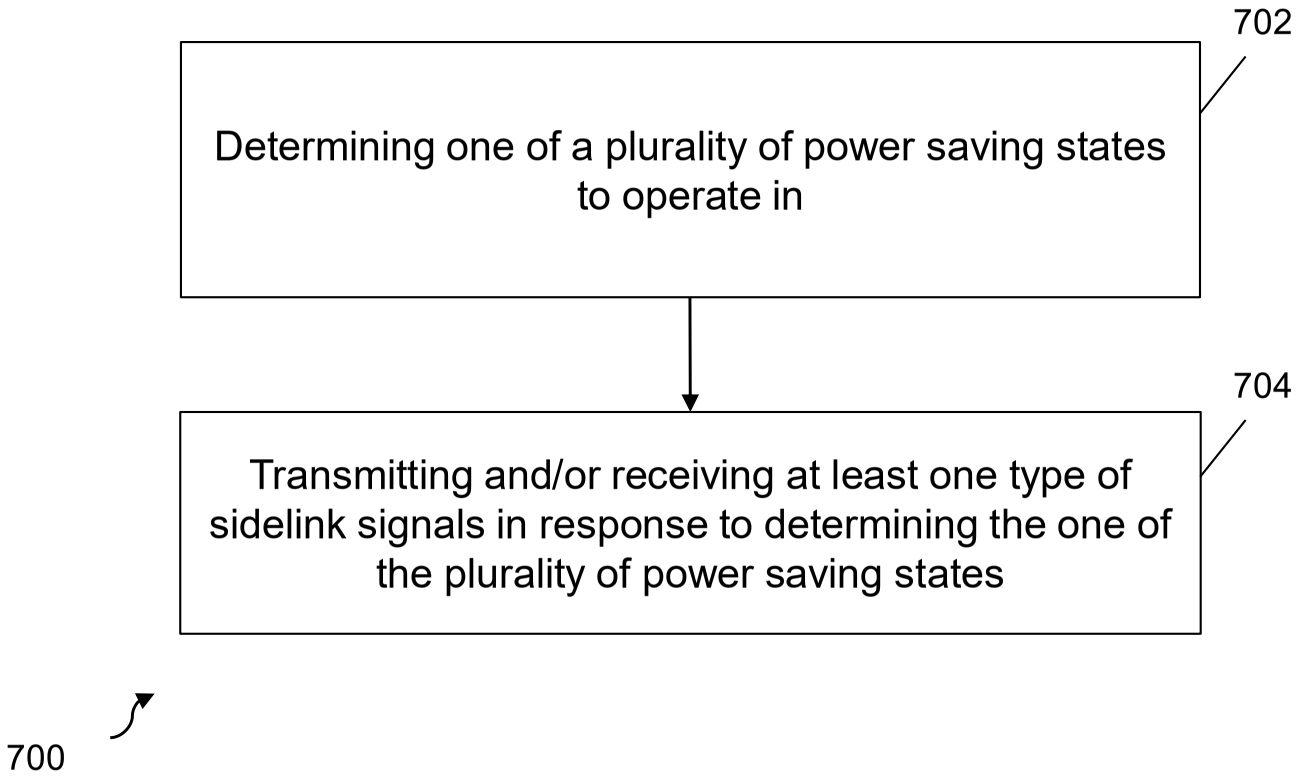
702
Determining one of a plurality of power saving states to operate in
704
Transmitting and/or receiving at least one type of sidelink signals in response to determining the one of the plurality of power saving states
700

Fig. 7

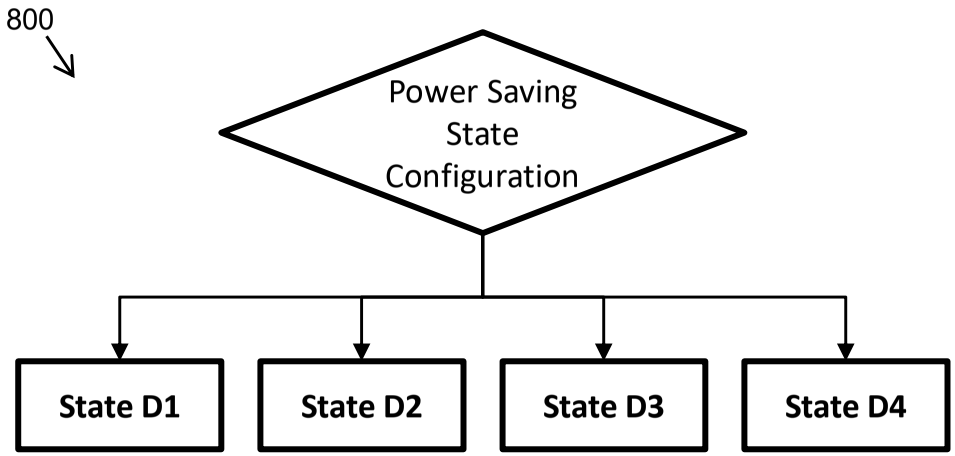
800
Power Saving State Configuration
State D1
State D2
State D3
State D4

Fig. 8

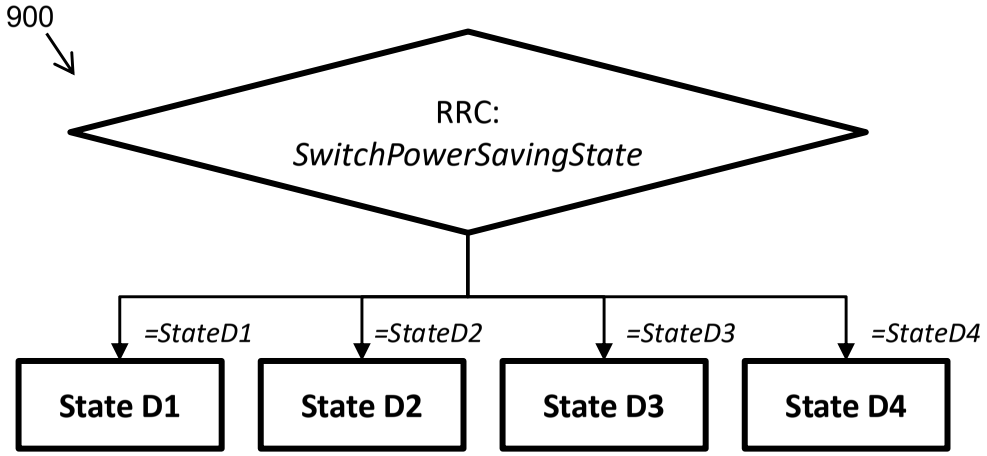
900
RRC:
SwitchPowerSavingState
=StateD1
=StateD2
=StateD3
=StateD4
State D1
State D2
State D3
State D4

Fig. 9

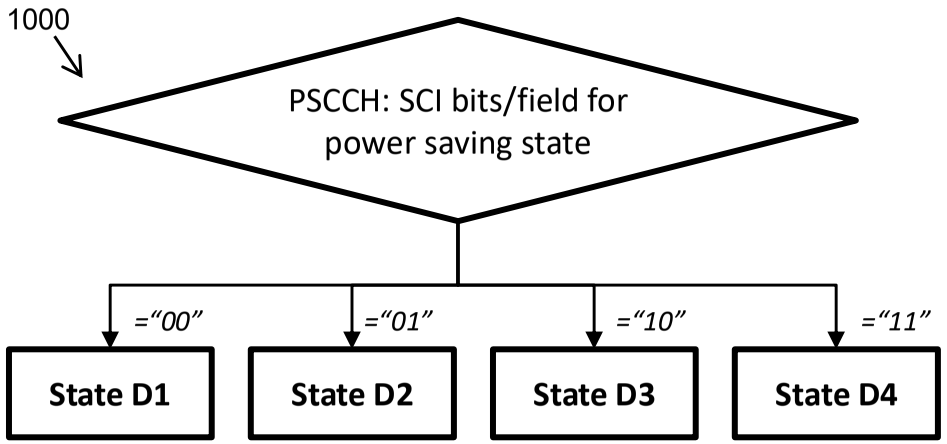
1000
PSCCH: SCI bits/field for power saving state
="00"
="01"
="10"
="11"
State D1
State D2
State D3
State D4

Fig. 10

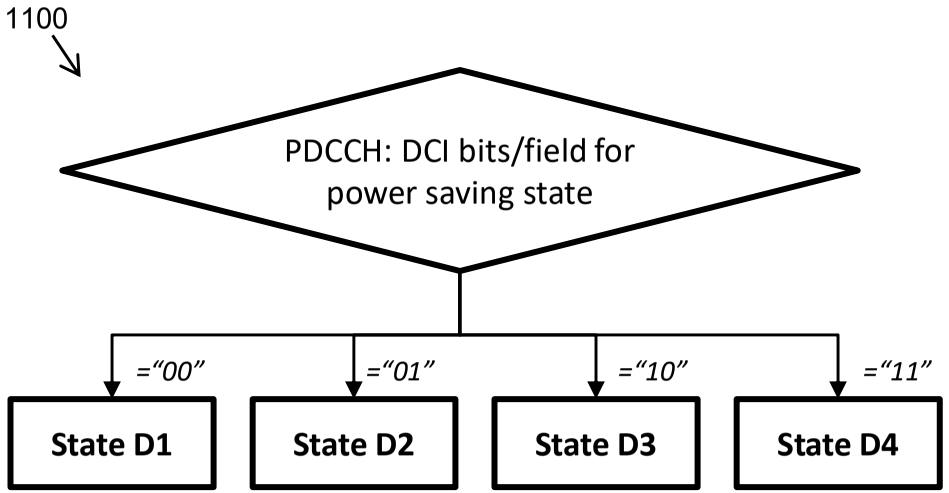
1100
PDCCH: DCI bits/field for power saving state
="00"
="01"
="10"
="11"
State D1
State D2
State D3
State D4

Fig. 11

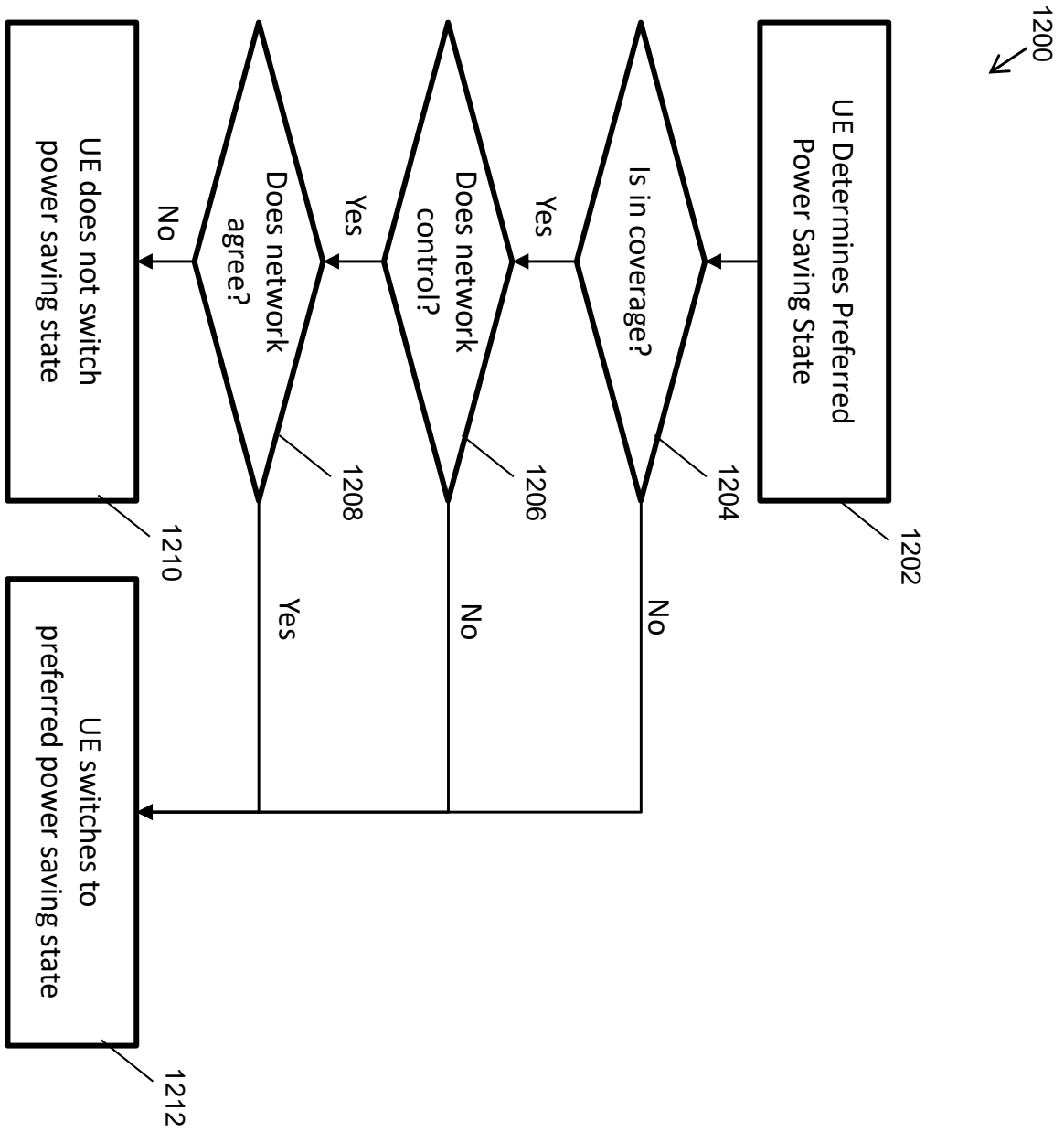
1200
UE Determines Preferred Power Saving State
1202
Is in coverage?
1204
Yes
Does network control?
1206
Yes
Does network agree?
1208
No
UE does not switch power saving state
1210
No
No
Yes
UE switches to preferred power saving state
1212

Fig. 12

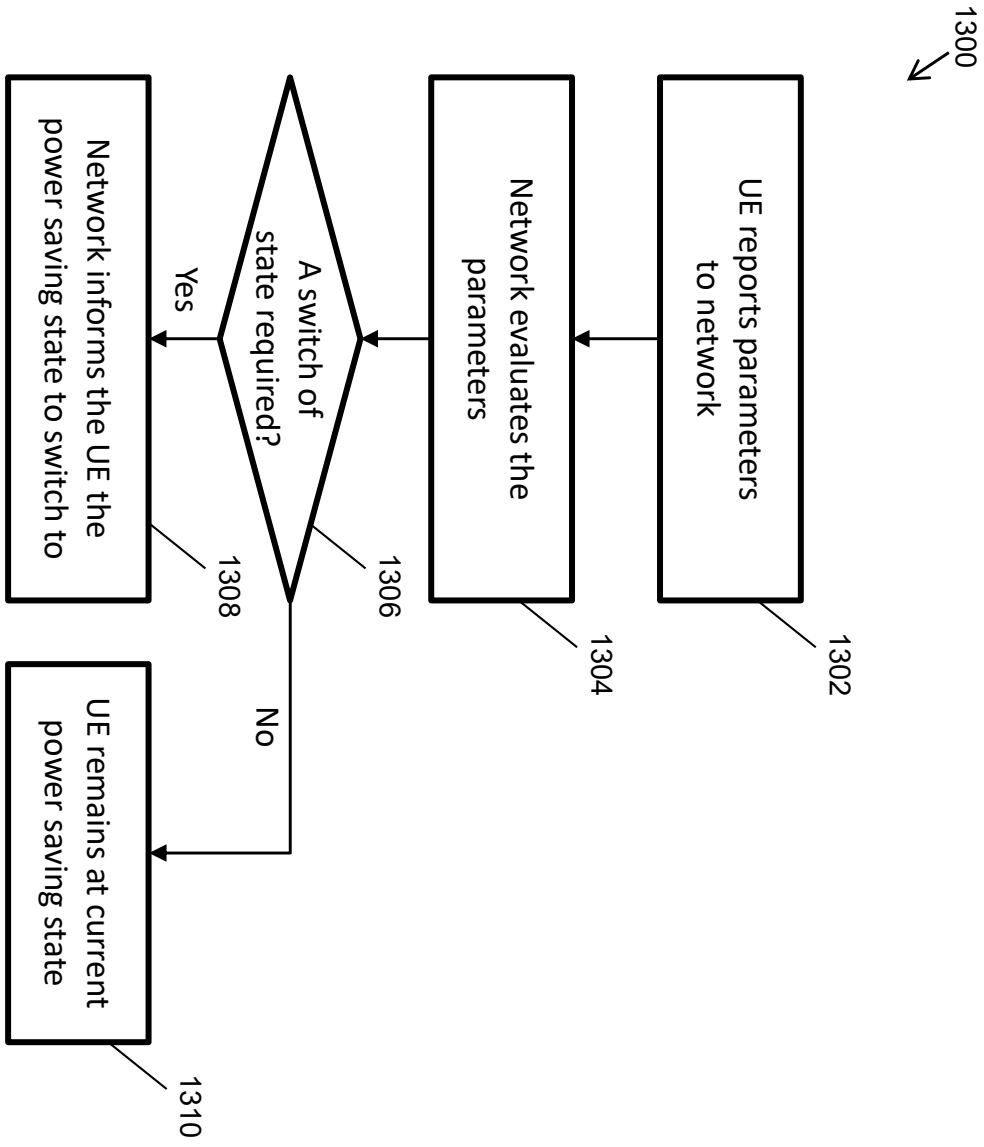
1300
UE reports parameters to network
1302
Network evaluates the parameters
1304
A switch of state required?
1306
Yes
No
Network informs the UE the power saving state to switch to
1308
UE remains at current power saving state
1310

Fig. 13

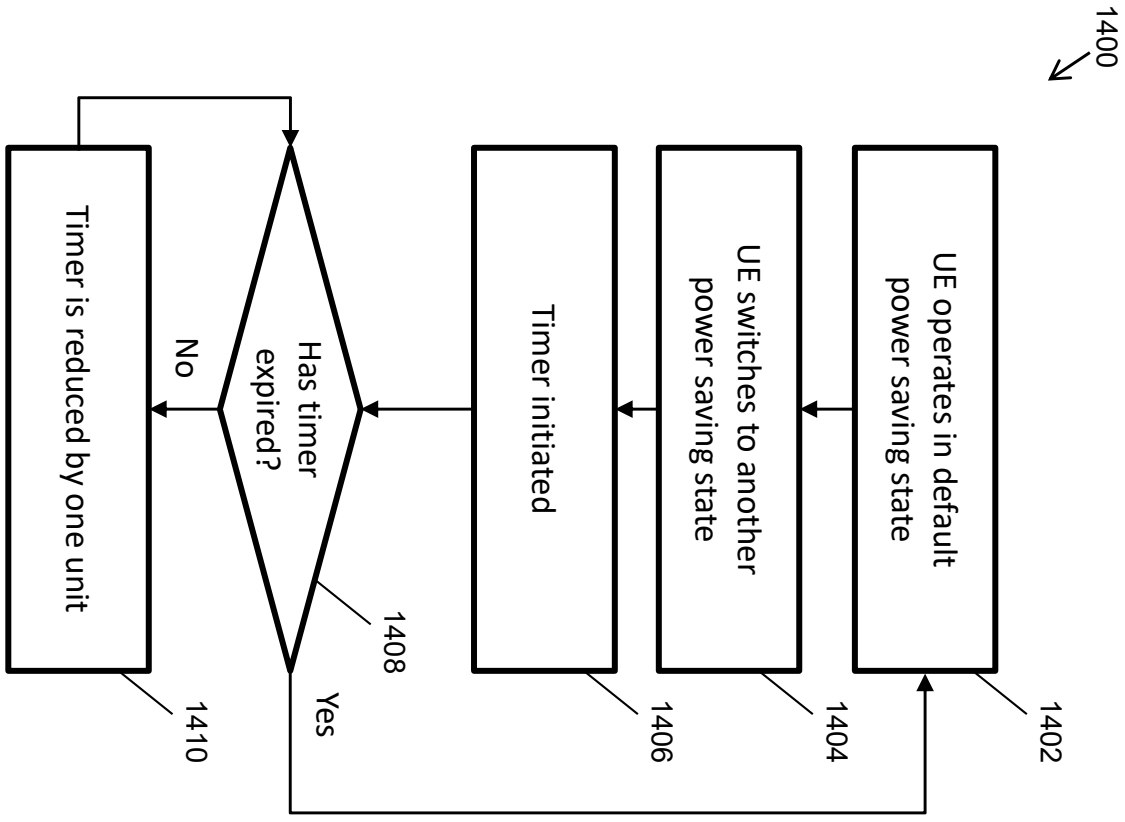
1400
UE operates in default power saving state
1402
UE switches to another power saving state
1404
Timer initiated
1406
Has timer expired?
1408
No
Yes
Timer is reduced by one unit
1410

Fig. 14