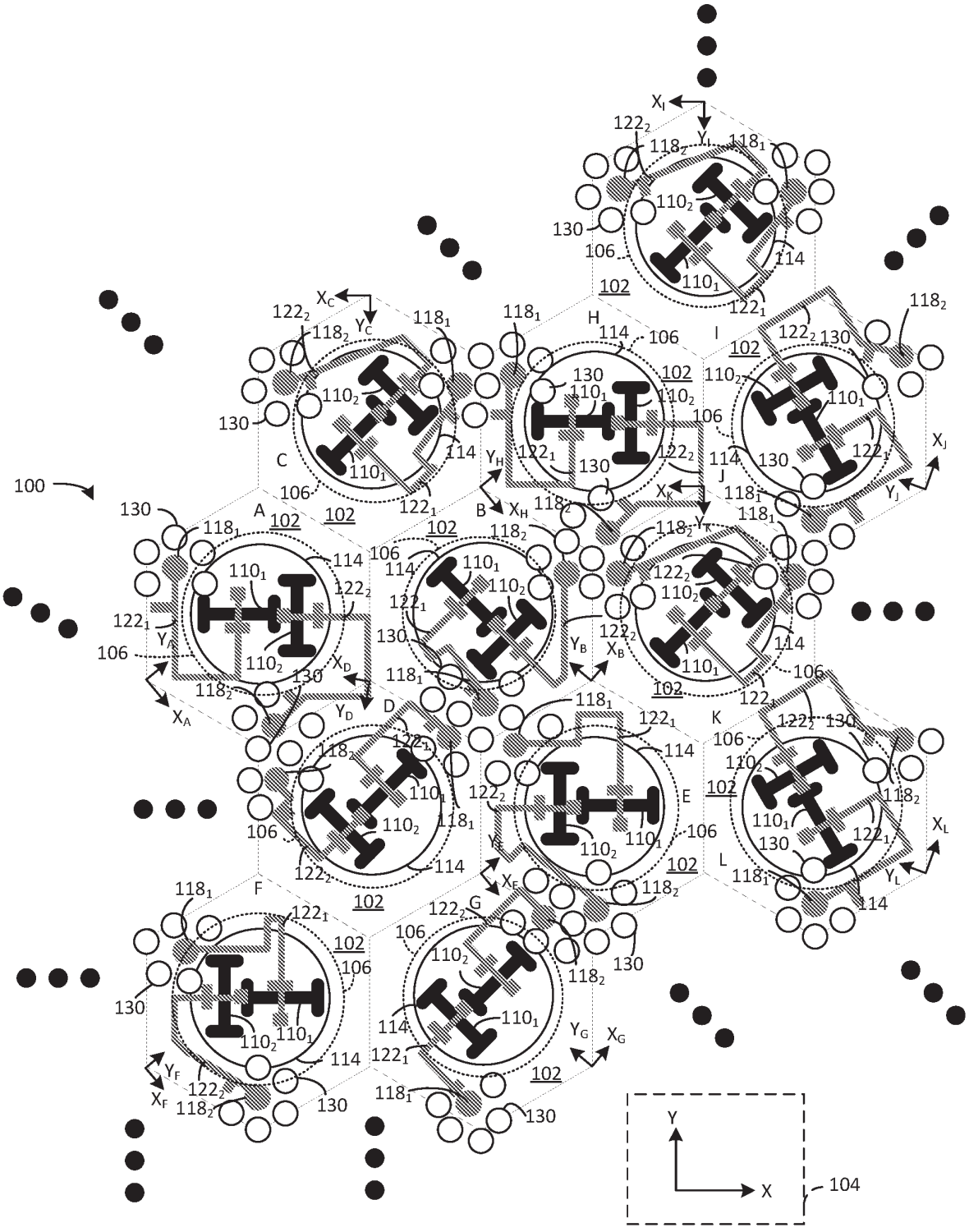

FIG. 1

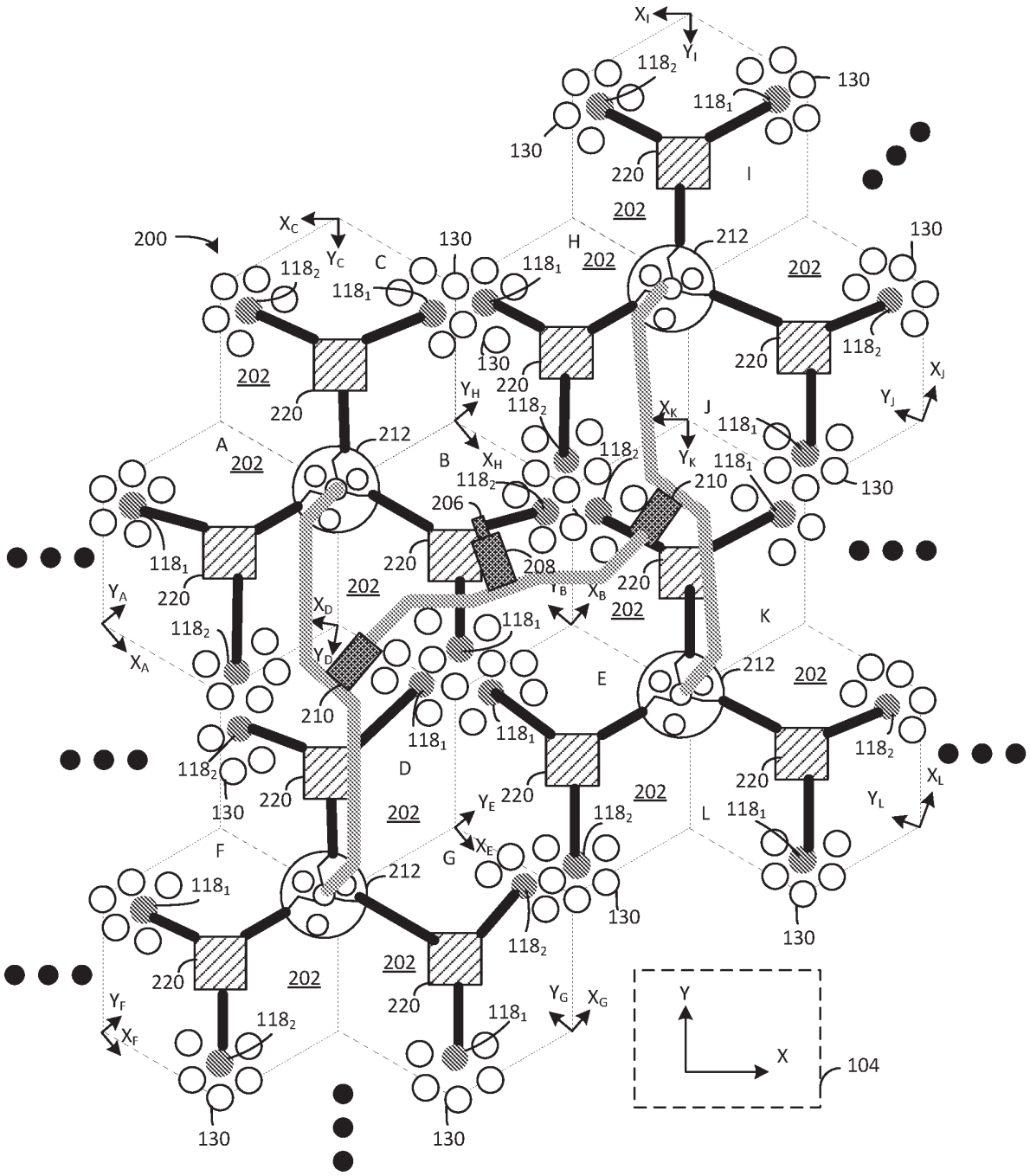

FIG. 2

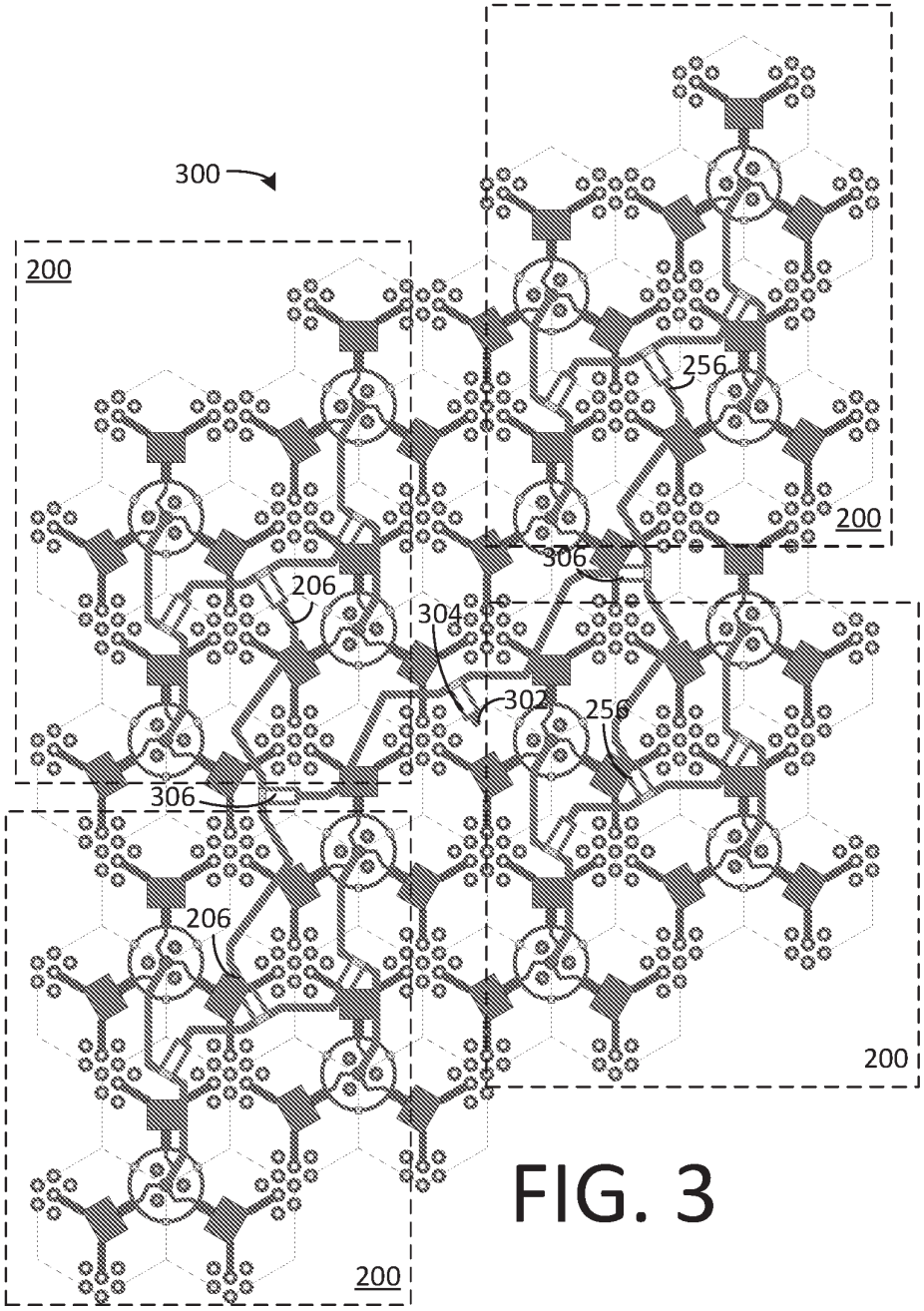

FIG. 3

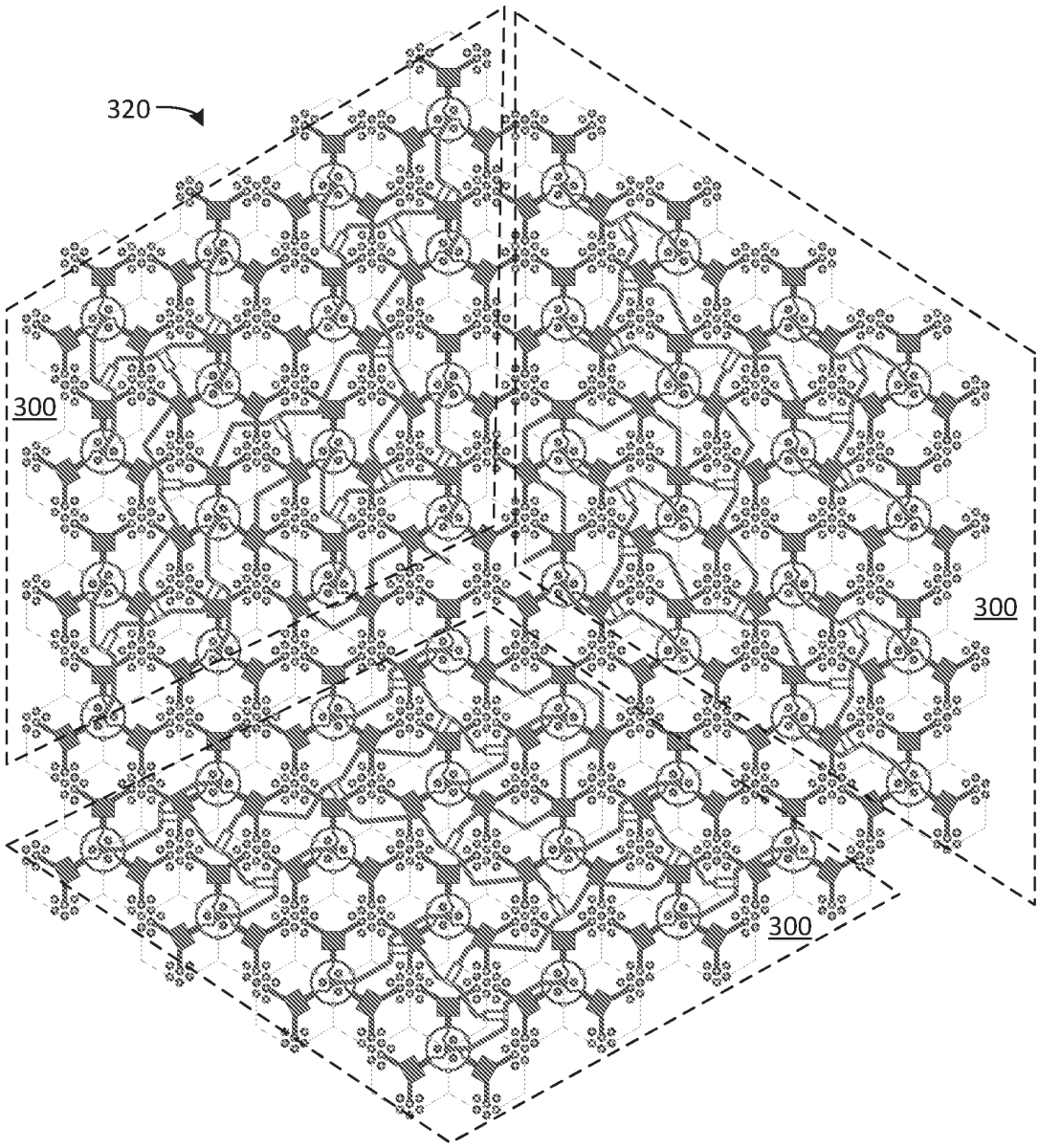

FIG. 4

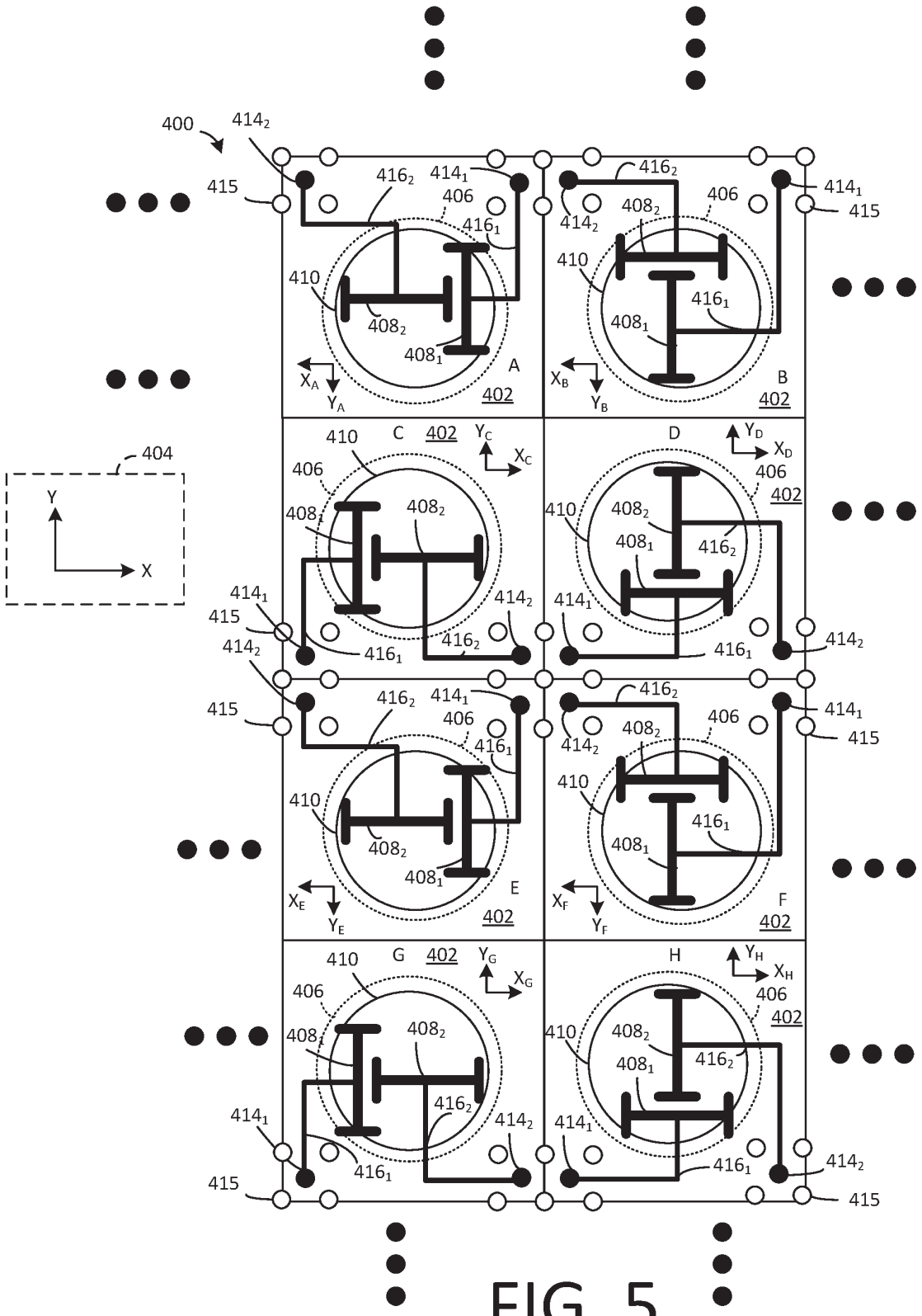
400
414_2
415
416_2
414_1
406
416_1
410
408_2
408_1
A
402
X_A
Y_A
B
X_B
Y_B
C
Y_C
X_C
D
Y_D
X_D
404
Y
X
E
X_E
Y_E
F
X_F
Y_F
G
Y_G
X_G
H
Y_H
X_H

FIG. 5

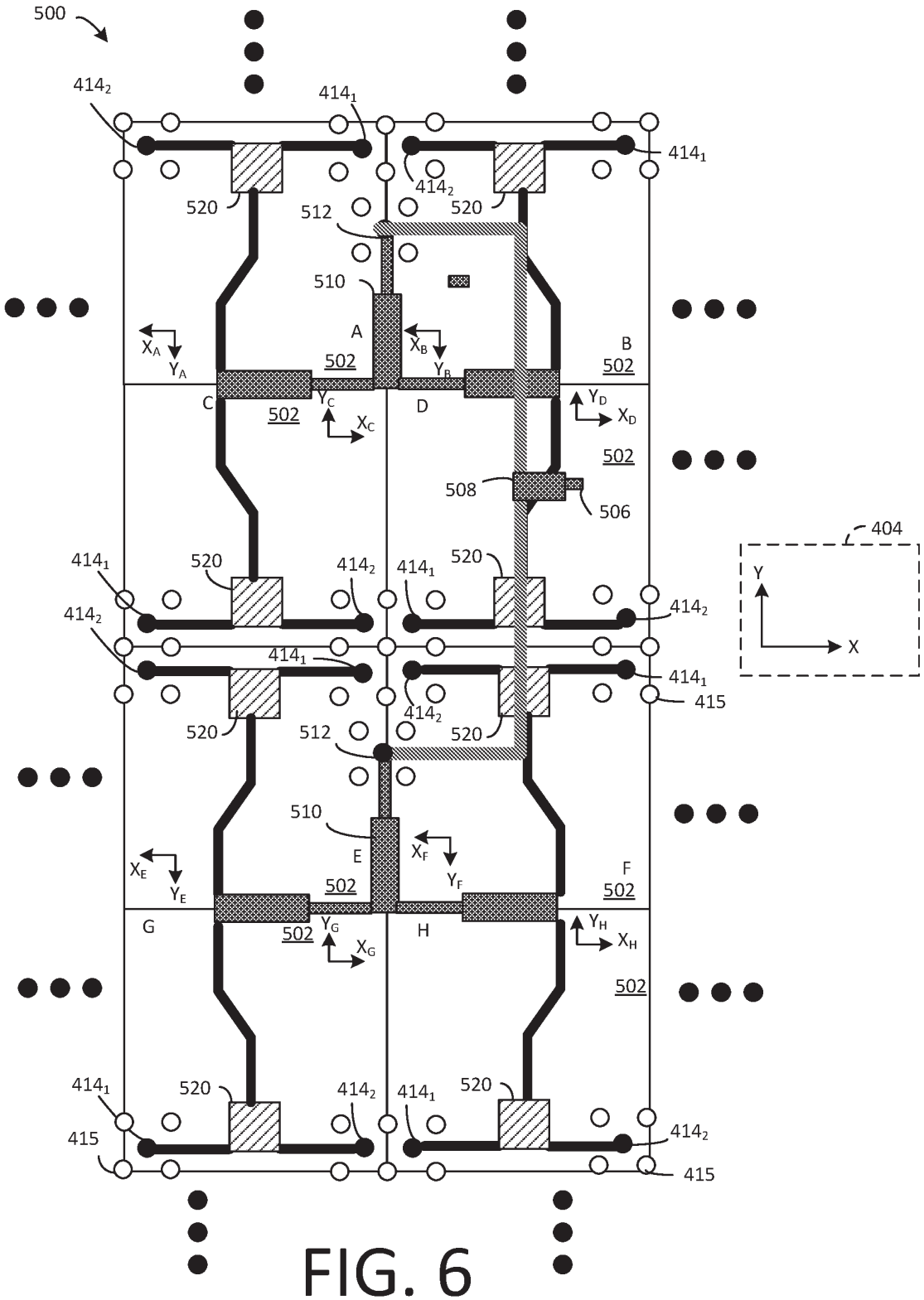

FIG. 6

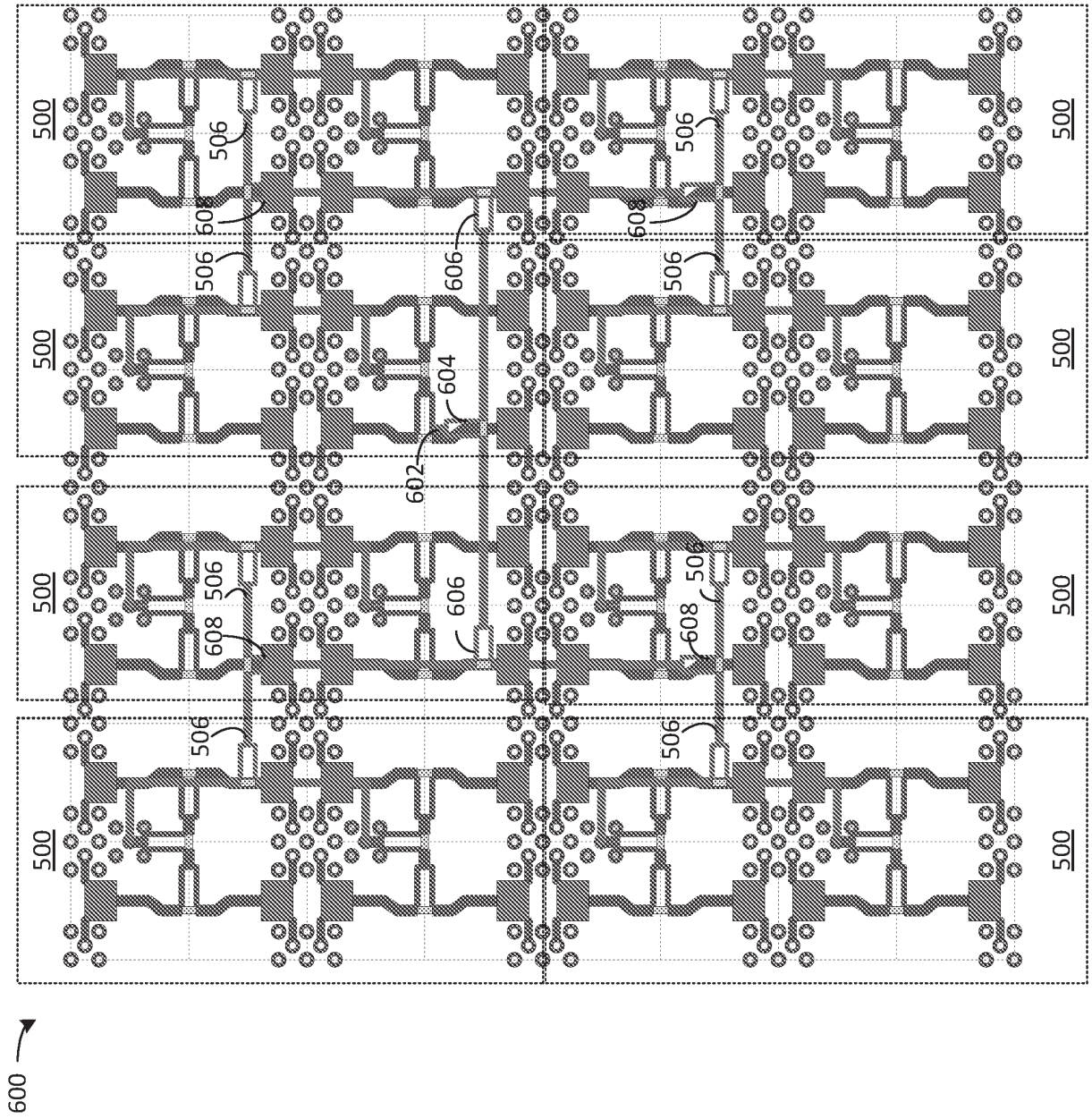

FIG. 7

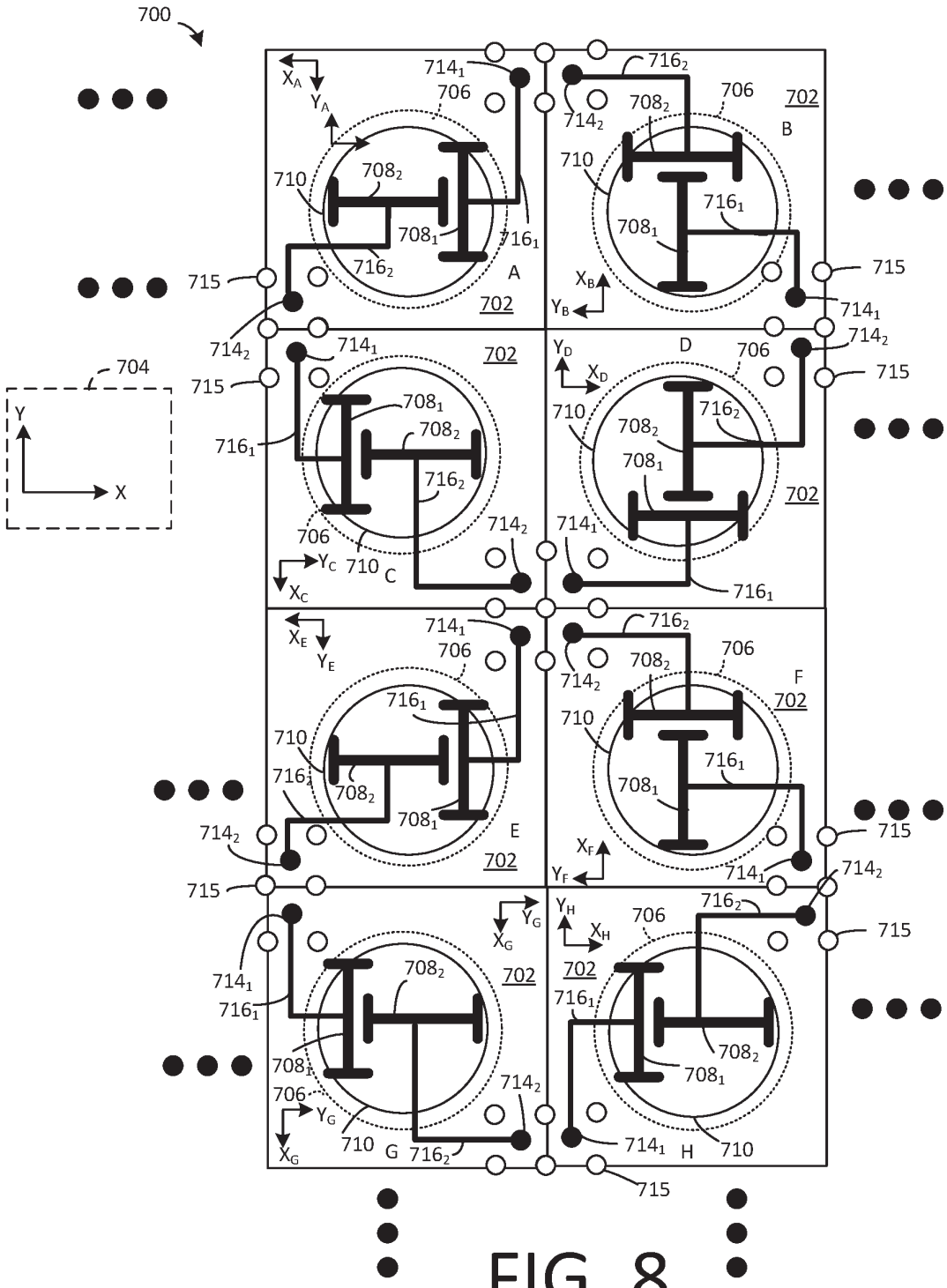
700
704
Y
X
X_A
Y_A
714_1
706
716_2
708_2
708_1
716_1
710
715
714_2
A
B
C
D
E
F
G
H
702
X_B
Y_B
Y_C
X_C
Y_D
X_D
X_E
Y_E
X_F
Y_F
Y_G
X_G
Y_H
X_H

FIG. 8

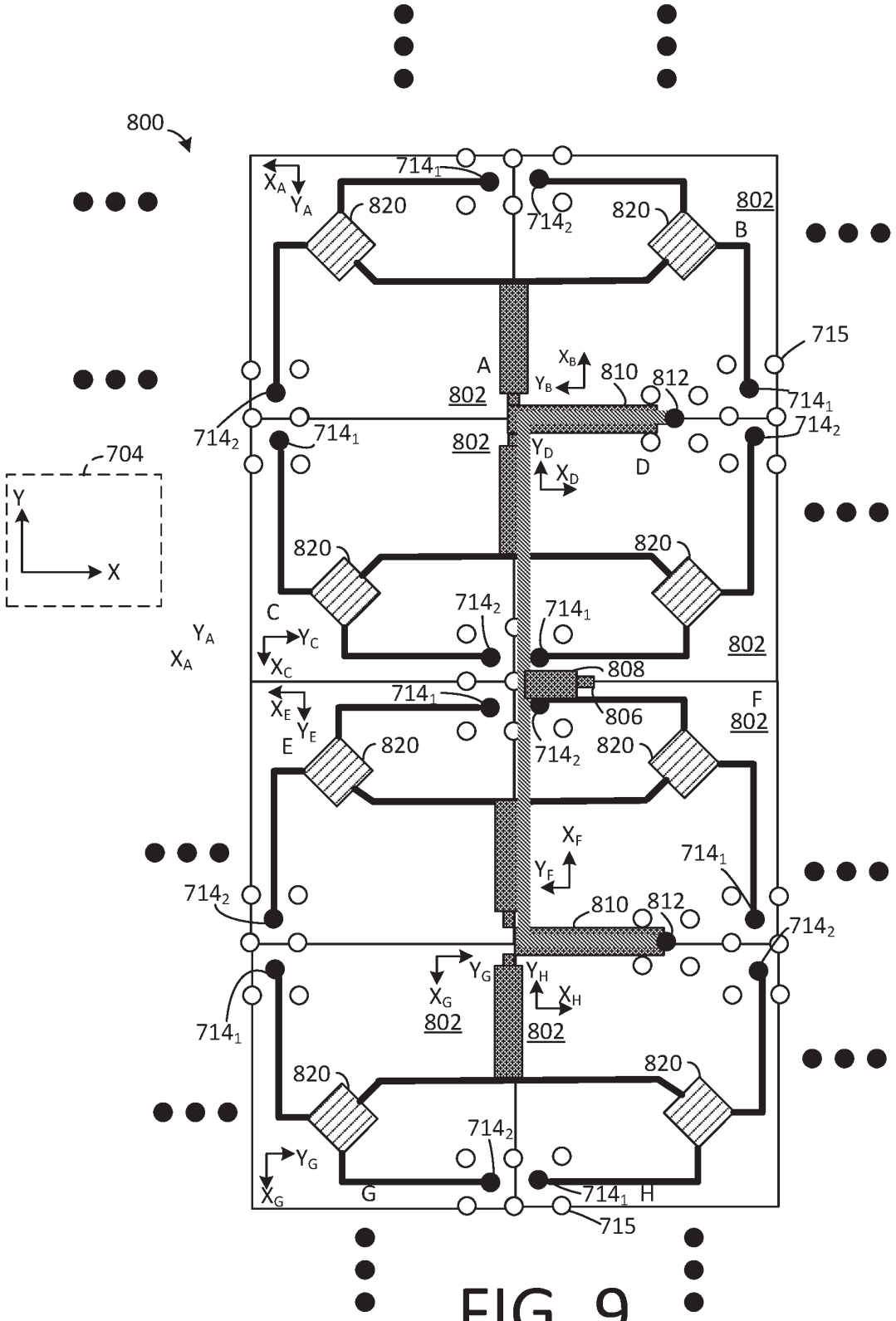
800
704
Y
X
X_A
Y_A
714_1
714_2
820
802
A
B
C
D
E
F
G
H
X_B
Y_B
X_C
Y_C
X_D
Y_D
X_E
Y_E
X_F
Y_F
X_G
Y_G
X_H
Y_H
810
812
715
808
806

FIG. 9

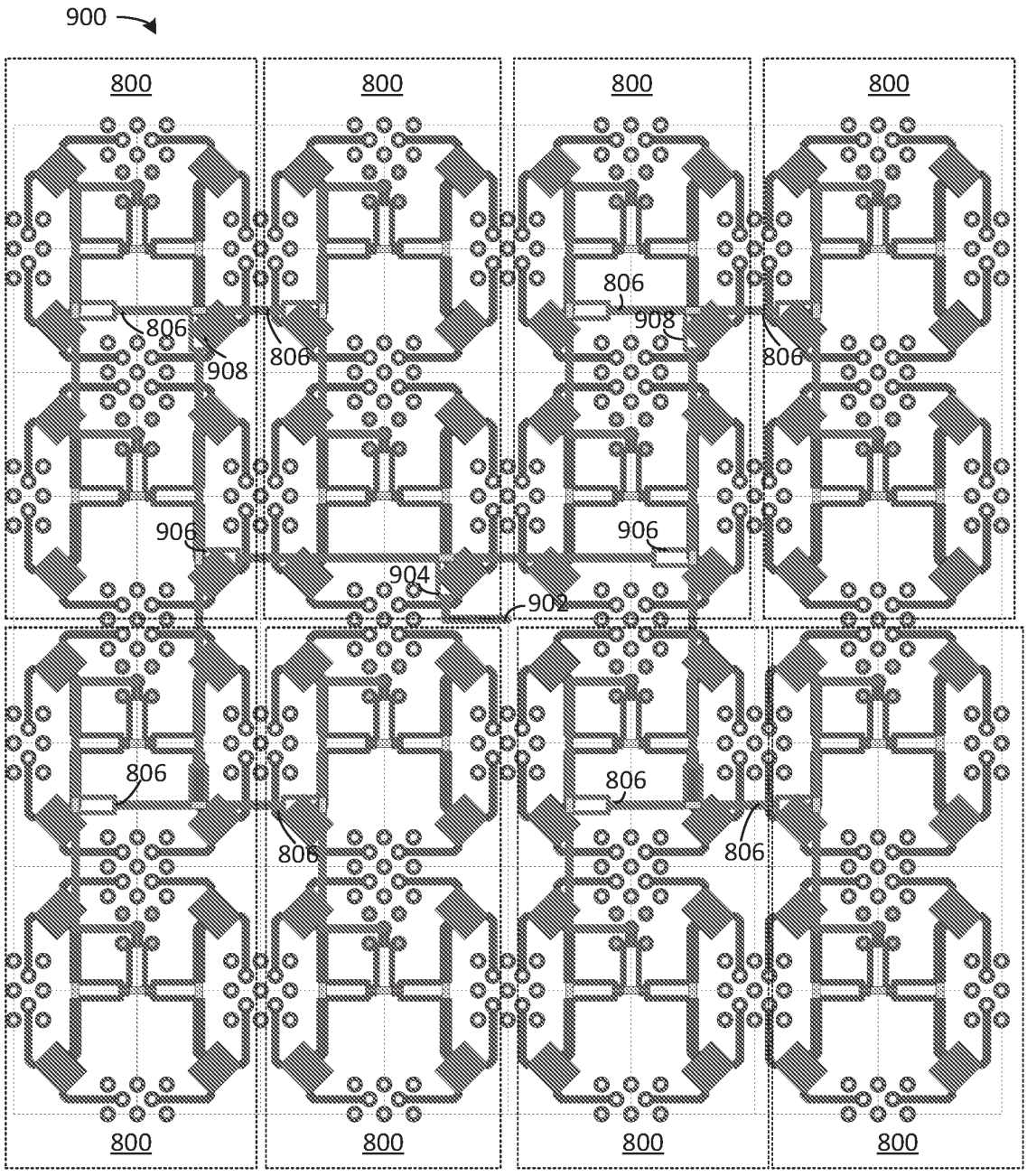
900
800
800
800
800
806
908
806
806
908
806
906
906
904
902
806
806
806
806
800
800
800
800

FIG. 10

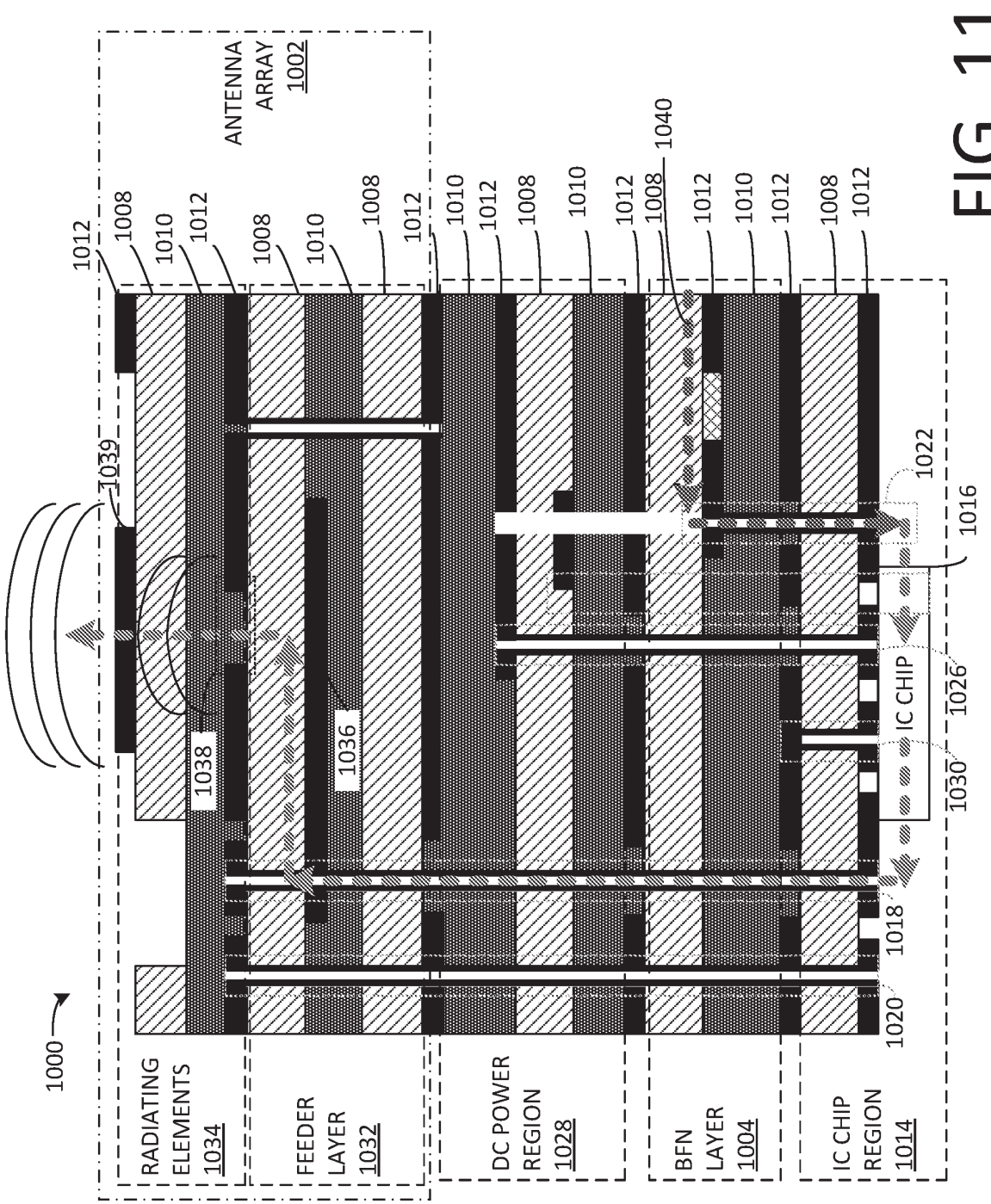
1000
RADIATING ELEMENTS 1034
FEEDER LAYER 1032
DC POWER REGION 1028
BFN LAYER 1004
IC CHIP REGION 1014
ANTENNA ARRAY 1002
1008
1010
1012
1036
1038
1039
1040
1016
1018
1020
1022
1026
1030
IC CHIP

FIG. 11

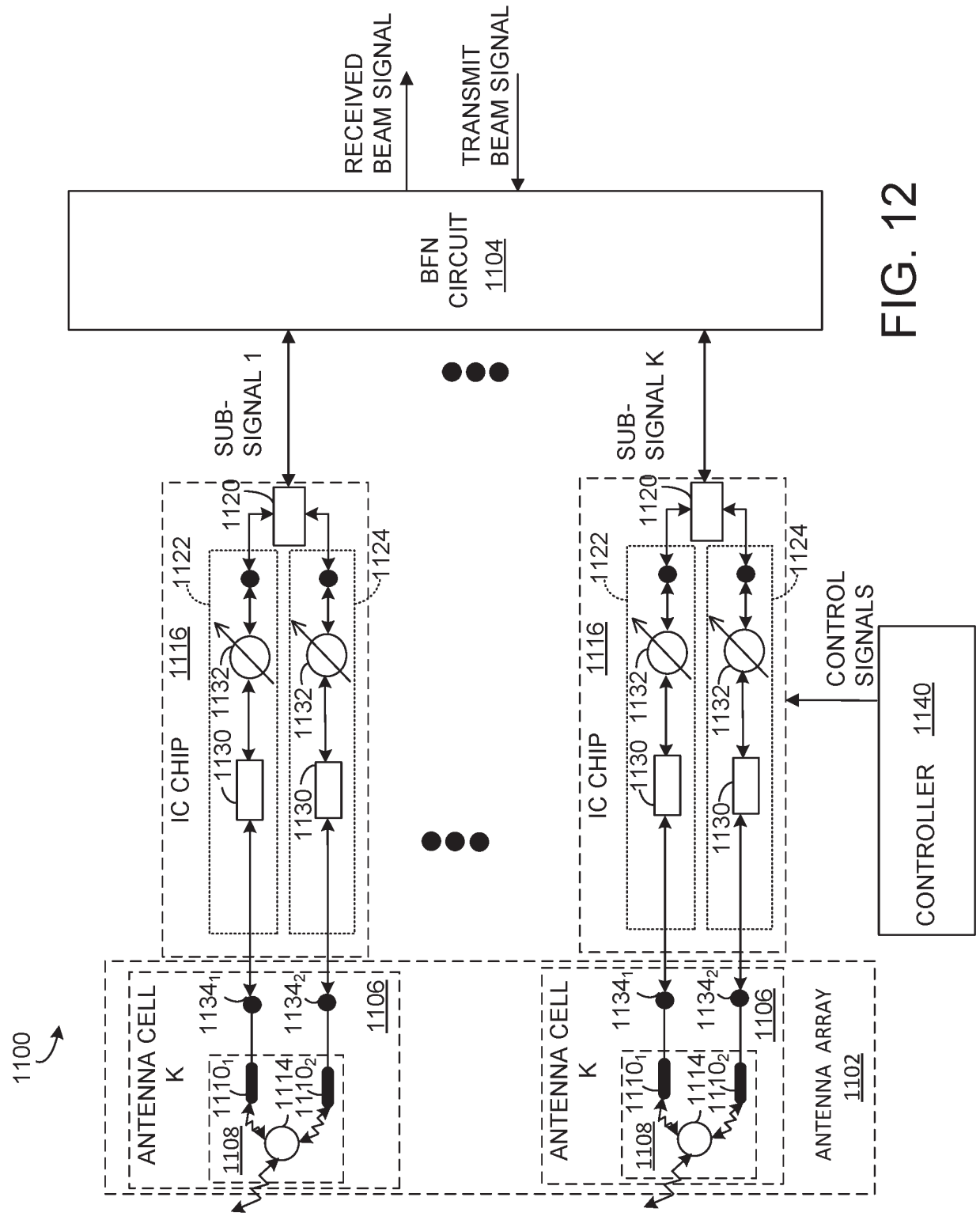
1100
ANTENNA ARRAY 1102
ANTENNA CELL K
1106
1108
1110
1114
1134
IC CHIP 1116
1120
1122
1124
1130
1132
SUB-SIGNAL 1
SUB-SIGNAL K
BFN CIRCUIT 1104
RECEIVED BEAM SIGNAL
TRANSMIT BEAM SIGNAL
CONTROL SIGNALS
CONTROLLER 1140

FIG. 12