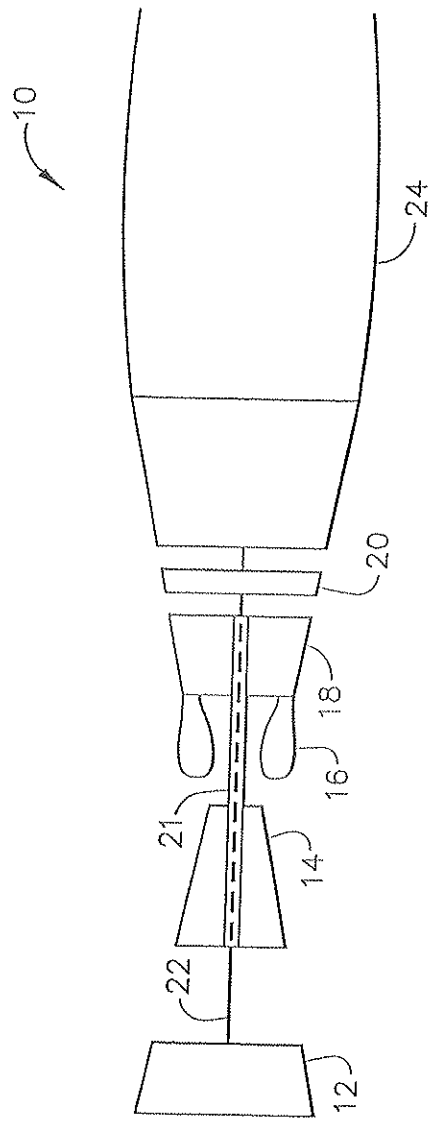

FIG. 1

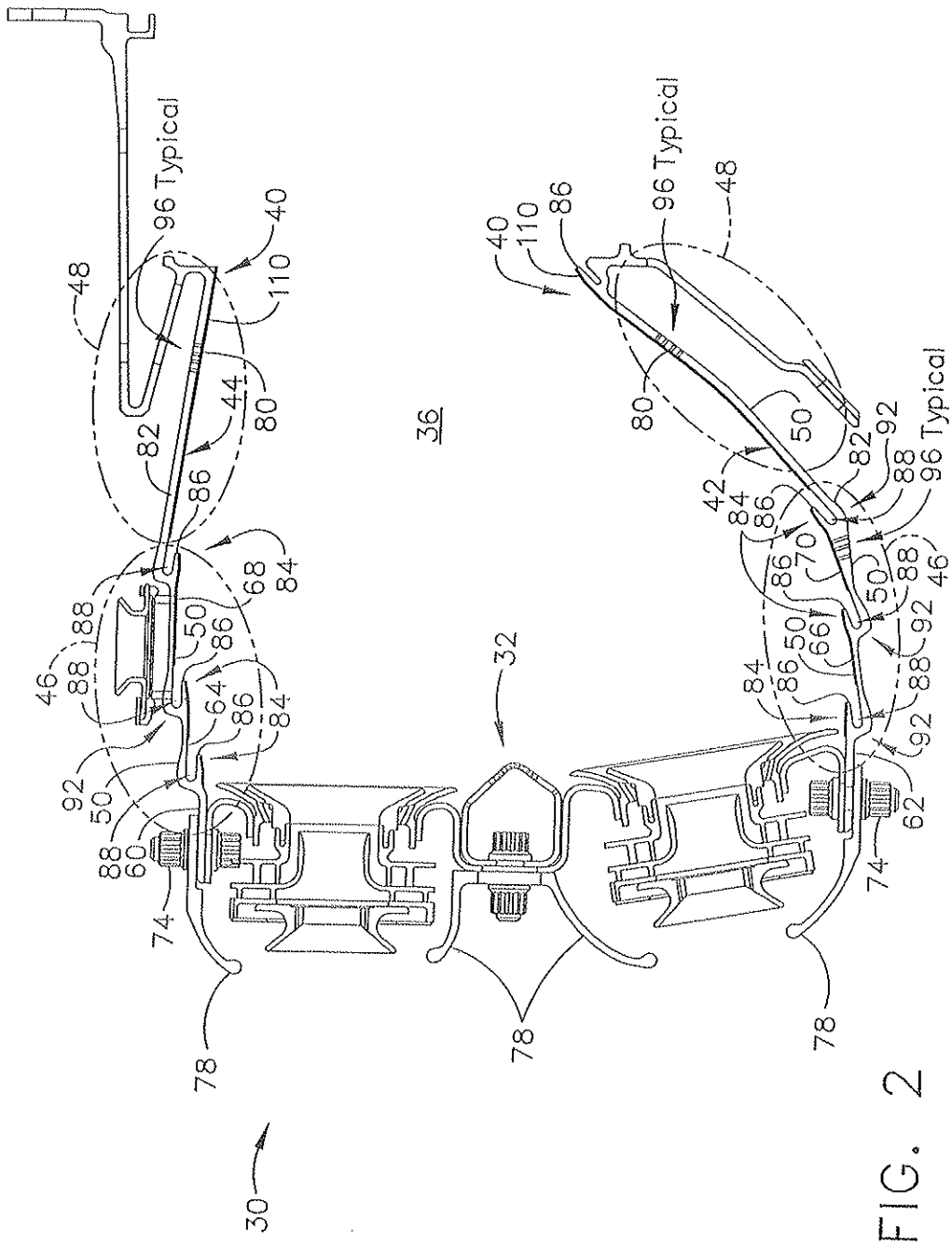
96 Typical
48
40
110
80
44
82
86
84
68
88
46
50
64
92
60
74
78
36
32
30
42
70
66
62

FIG. 2

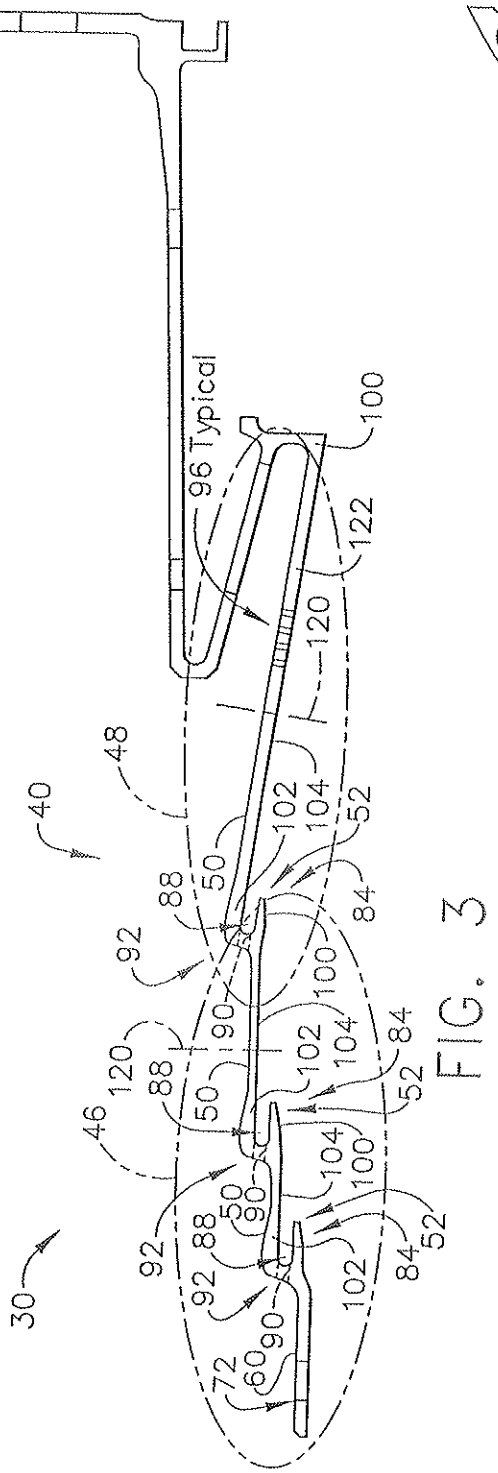
30
40
46
48
50
52
72
84
88
90
92
96 Typical
100
102
104
120
122

FIG. 3

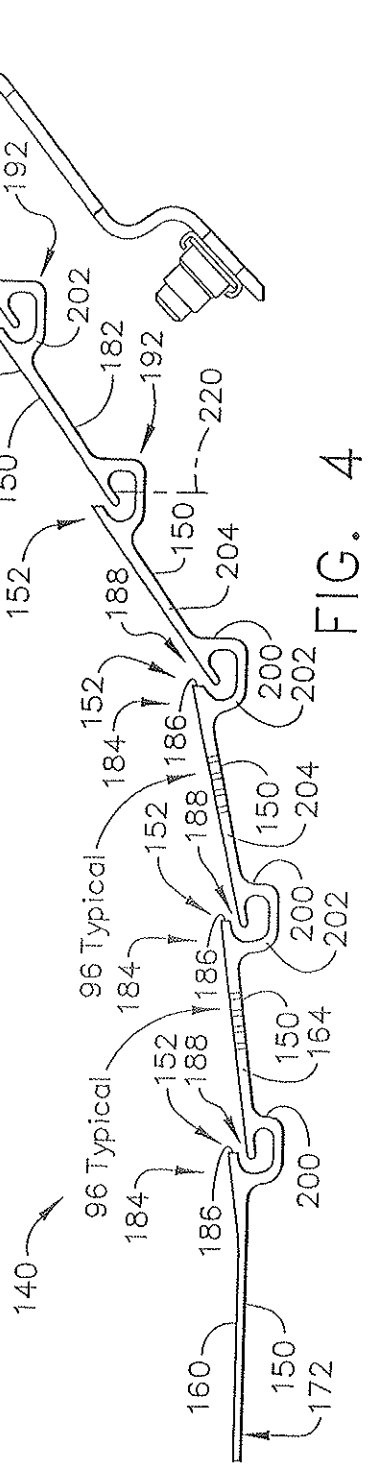
140
150
152
160
164
172
180
182
184
186
188
192
200
202
204
220
96 Typical

FIG. 4

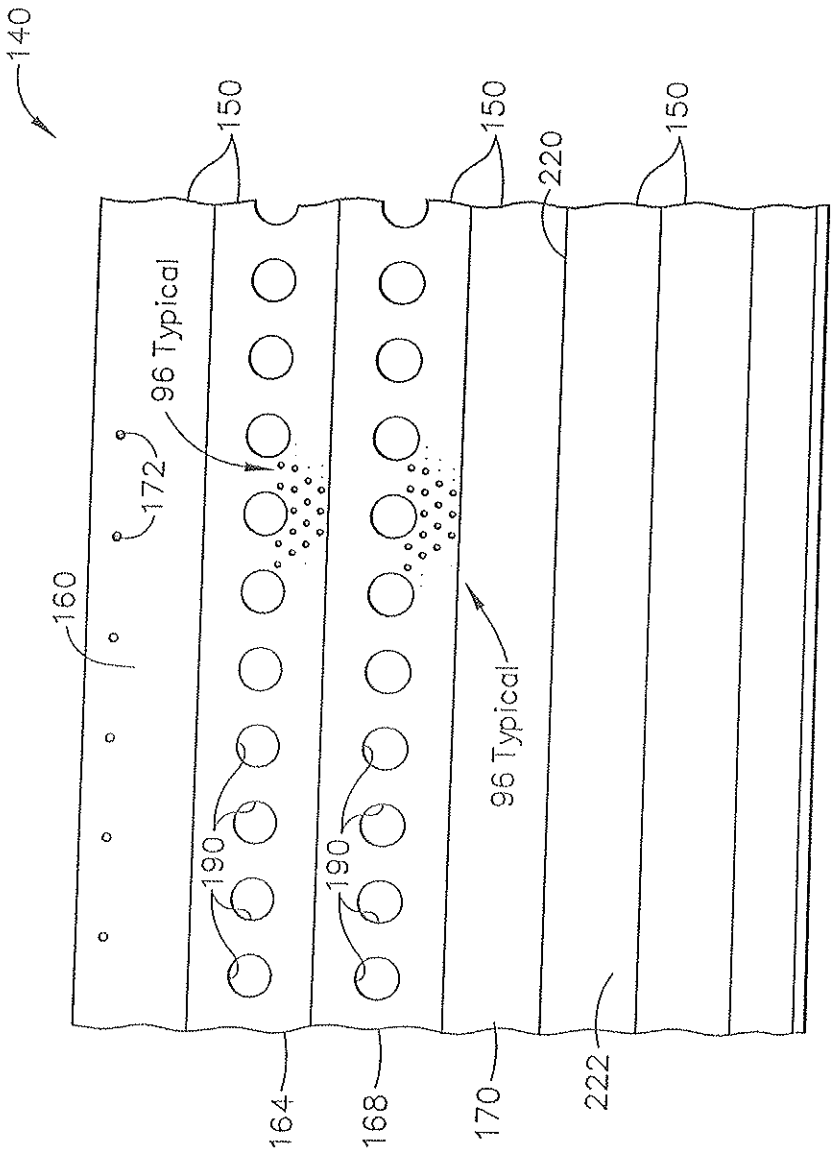
140
150
150
150
220
96 Typical
172
160
190
190
96 Typical
164
168
170
222

FIG. 5

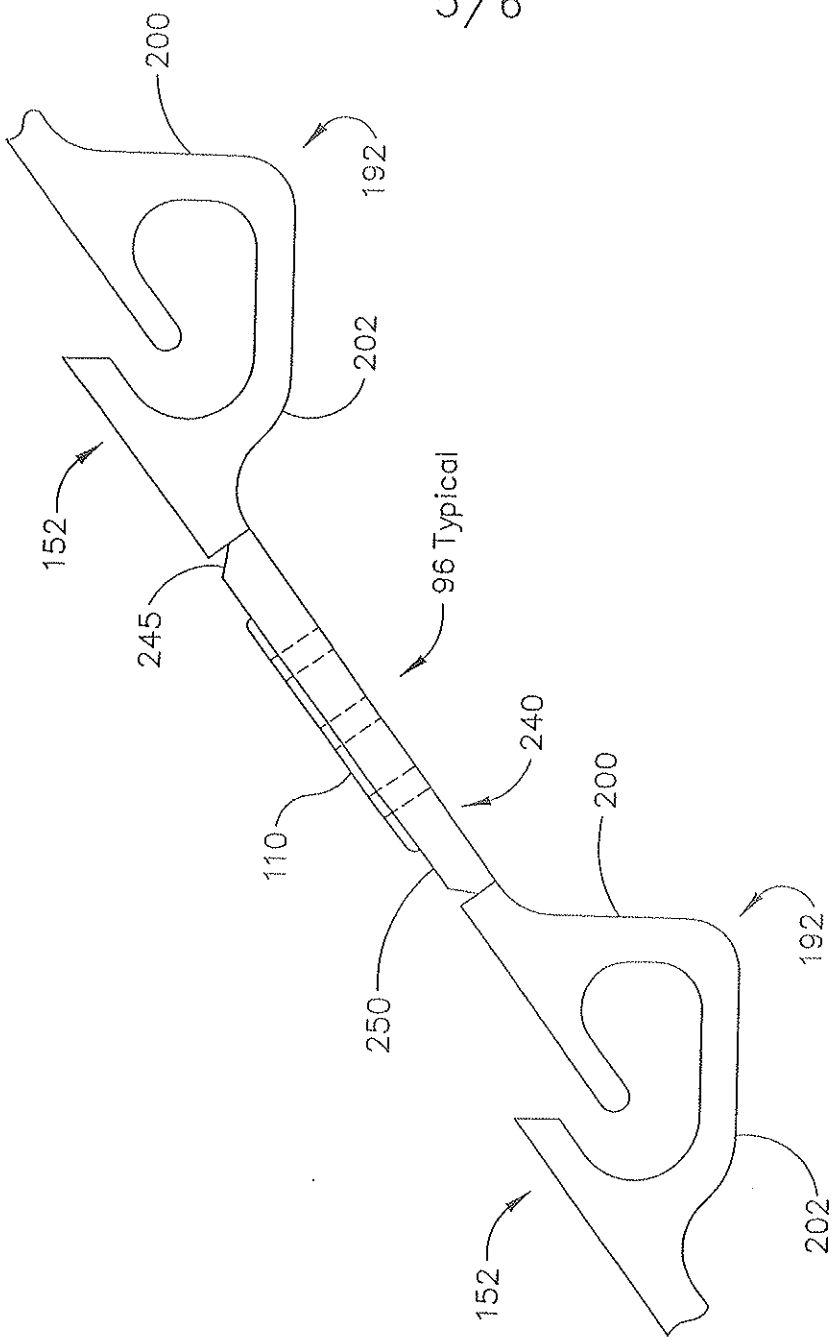

FIG. 6

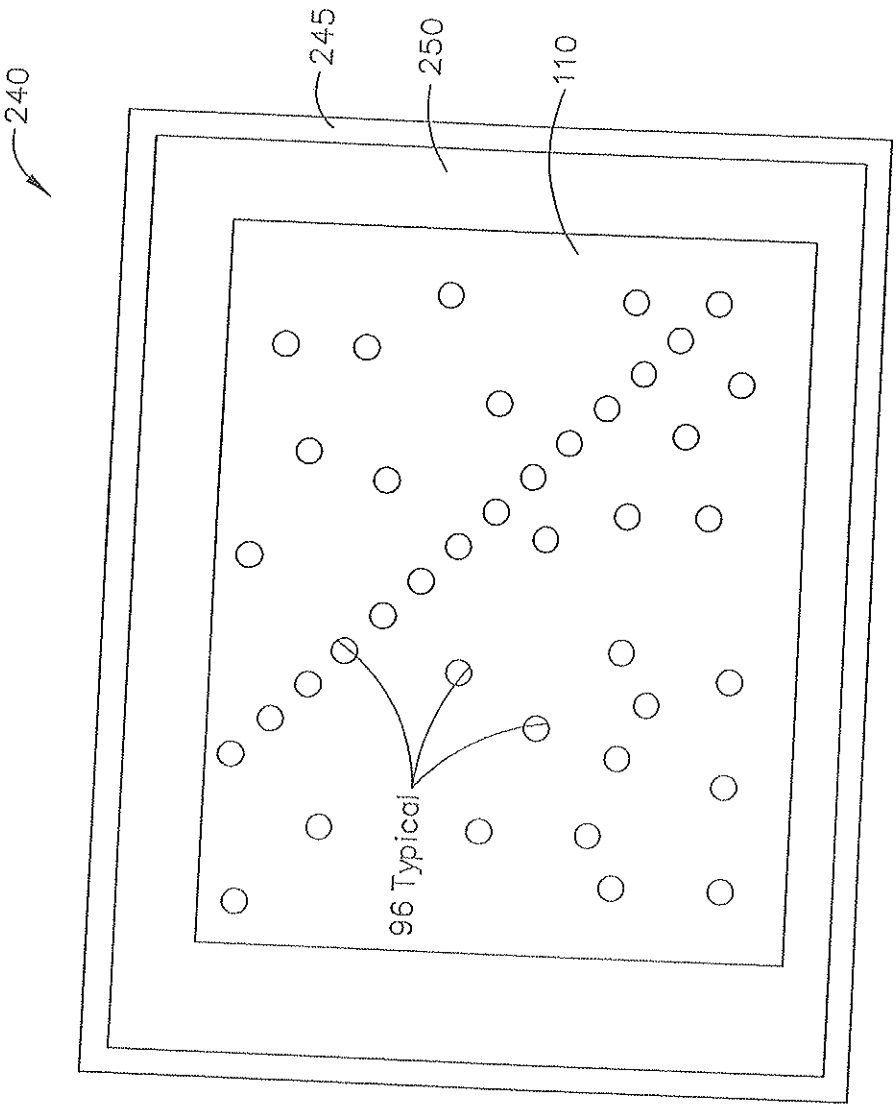

FIG 7