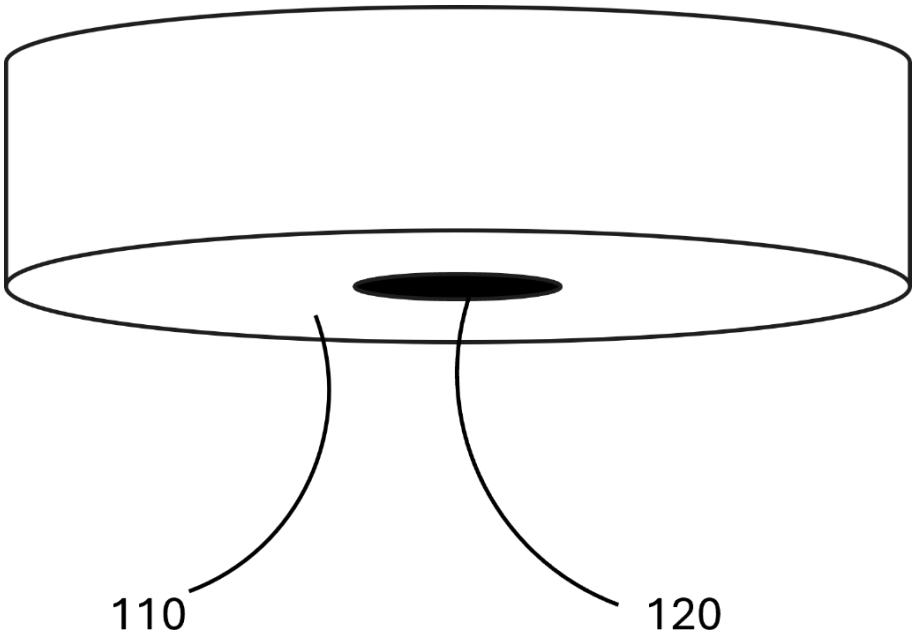

Figure 1

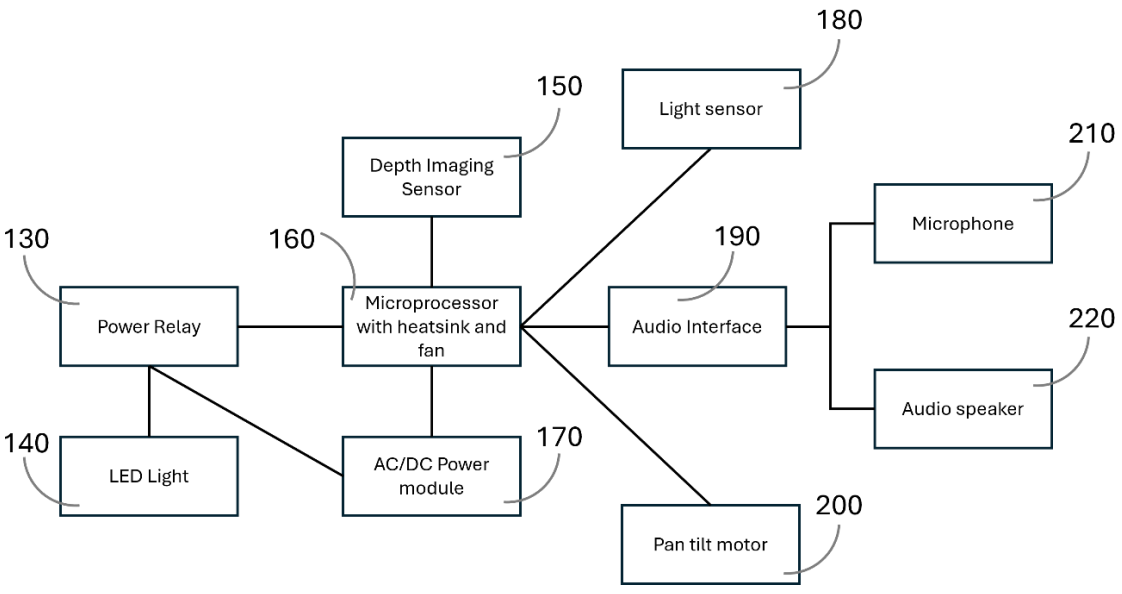

Figure 2

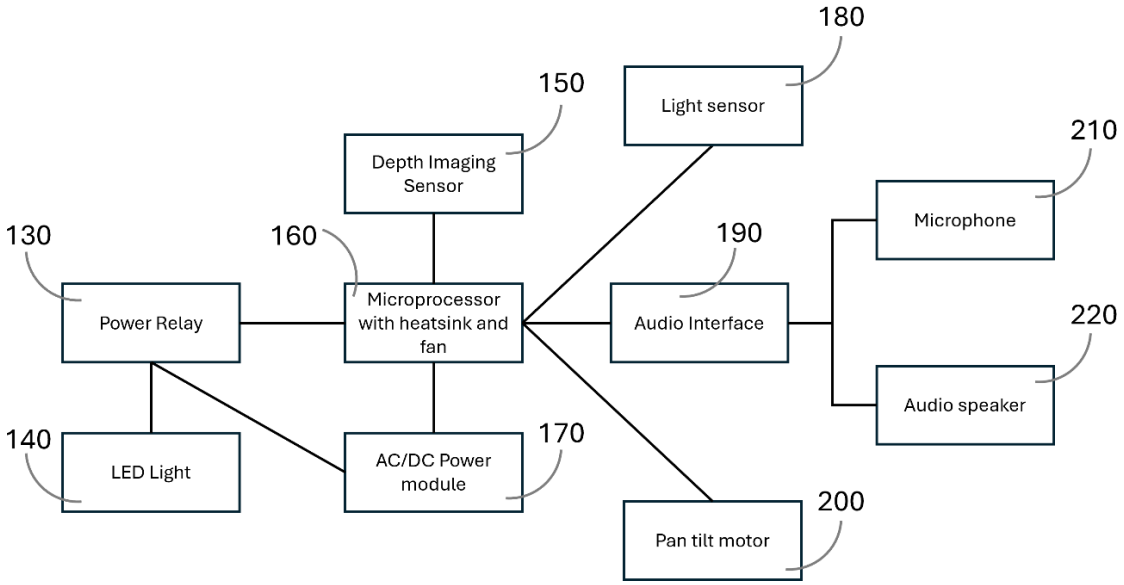
180
Light sensor
150
Depth Imaging Sensor
210
Microphone
130
160
190
Power Relay
Microprocessor with heatsink and fan
Audio Interface
220
Audio speaker
140
LED Light
AC/DC Power module
170
200
Pan tilt motor

Figure 3