9900839-3
IPOS

**PCT** WORLD INTELLECTUAL PROPERTY ORGANIZATION
International Bureau

INTERNATIONAL APPLICATION PUBLISHED UNDER THE PATENT COOPERATION TREATY (PCT)

(51) International Patent Classification 6 : B42D 15/00 — A1

(11) International Publication Number: WO 98/13211

(43) International Publication Date: 2 April 1998 (02.04.98)

(21) International Application Number: PCT/AU97/00632

(22) International Filing Date: 24 September 1997 (24.09.97)

(30) Priority Data:
PO 2602 26 September 1996 (26.09.96) AU

(71) Applicant *(for all designated States except US)*: RESERVE BANK OF AUSTRALIA [AU/AU]; Note Printing Branch, Hume Highway, Craigieburn, VIC 3064 (AU).

(72) Inventors; and

(75) Inventors/Applicants *(for US only)*: HARDWICK, Bruce, Alfred [AU/AU]; 5 Scanlons Road, Wandong, VIC 3758 (AU). JACKSON, Wayne, Kevin [AU/AU]; 69 Darebin Road, Reservoir, VIC 3073 (AU). ZIENTEK, Paul [AU/AU]; 546 Station Street, North Carlton, VIC 3054 (AU). HIBBERT, Cameron, Rex [AU/AU]; 15 Mulcare Crescent, Churchill, VIC 3842 (AU).

(74) Agent: CARTER SMITH & BEADLE; Qantas House, 2 Railway Parade, Camberwell, VIC 3124 (AU).

(81) Designated States: AL, AM, AT, AU, AZ, BA, BB, BG, BR, BY, CA, CH, CN, CU, CZ, DE, DK, EE, ES, FI, GB, GE, GH, HU, ID, IL, IS, JP, KE, KG, KP, KR, KZ, LC, LK, LR, LS, LT, LU, LV, MD, MG, MK, MN, MW, MX, NO, NZ, PL, PT, RO, RU, SD, SE, SG, SI, SK, SL, TJ, TM, TR, TT, UA, UG, US, UZ, VN, YU, ZW, ARIPO patent (GH, KE, LS, MW, SD, SZ, UG, ZW), Eurasian patent (AM, AZ, BY, KG, KZ, MD, RU, TJ, TM), European patent (AT, BE, CH, DE, DK, ES, FI, FR, GB, GR, IE, IT, LU, MC, NL, PT, SE), OAPI patent (BF, BJ, CF, CG, CI, CM, GA, GN, ML, MR, NE, SN, TD, TG).

**Published**
*With international search report.*

(54) Title: BANKNOTES INCORPORATING SECURITY DEVICES

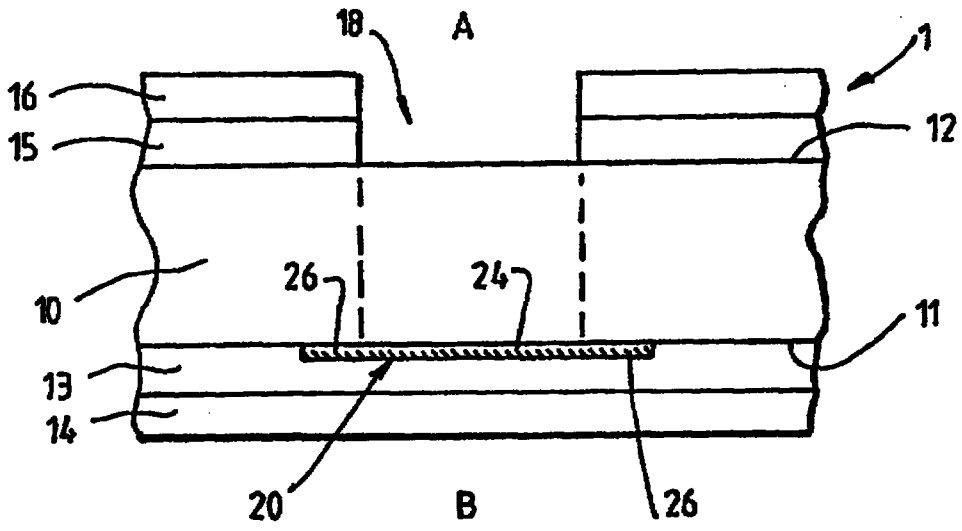


(57) Abstract

A security document (1), such as a banknote is formed from a sheet–like substrate (10) of clear plastics material with layers (13, 14, 15, 16) of opacifying ink applied to the surfaces (11, 12) of the substrate (10). The security document (1) includes a security device (20) which is at least partially obscured by the layers (13, 14) of opacifying ink on a first surface (11) of the substrate (10). The layers (15, 16) on the second surface (12) of the substrate (10) are applied in such a manner so as to leave a "half–window" area uncovered by opacifying ink through which the security device (20) is visible from one side of the document (1). The security device (20) may extend transversely outside the half–window area and be visible in transmission, enabling a different contrasting effect to be observed from both sides of the document.