(12) INTERNATIONAL APPLICATION PUBLISHED UNDER THE PATENT COOPERATION TREATY (PCT)

(19) World Intellectual Property Organization
International Bureau

(43) International Publication Date
4 July 2013 (04.07.2013)

WIPO | PCT

(10) International Publication Number
WO 2013/098395 A1

(51) International Patent Classification:
A24F 47/00 (2006.01)

(21) International Application Number:
PCT/EP2012/077062

(22) International Filing Date:
28 December 2012 (28.12.2012)

(25) Filing Language: English

(26) Publication Language: English

(30) Priority Data:
11196232.0 30 December 2011 (30.12.2011) EP

(71) Applicant: **PHILIP MORRIS PRODUCTS S.A.** [CH/CH]; Quai Jeanrenaud 3, CH-2000 Neuchatel (CH).

(72) Inventors: **PLOJOUX, Julien**; Rue Micheli-du-Crest, CH-1205 Geneva (CH). **GREIM, Olivier**; Chemin des Sources, CH-1423 Villars-Burquin (CH).

(74) Agent: **PONDER, William**; Reddie & Grose LLP, 16 Theobalds Road, London Greater London WC1X 8PL (GB).

(81) Designated States *(unless otherwise indicated, for every kind of national protection available)*: AE, AG, AL, AM, AO, AT, AU, AZ, BA, BB, BG, BH, BN, BR, BW, BY, BZ, CA, CH, CL, CN, CO, CR, CU, CZ, DE, DK, DM, DO, DZ, EC, EE, EG, ES, FI, GB, GD, GE, GH, GM, GT, HN, HR, HU, ID, IL, IN, IS, JP, KE, KG, KM, KN, KP, KR, KZ, LA, LC, LK, LR, LS, LT, LU, LY, MA, MD, ME, MG, MK, MN, MW, MX, MY, MZ, NA, NG, NI, NO, NZ, OM, PA, PE, PG, PH, PL, PT, QA, RO, RS, RU, RW, SC, SD, SE, SG, SK, SL, SM, ST, SV, SY, TH, TJ, TM, TN, TR, TT, TZ, UA, UG, US, UZ, VC, VN, ZA, ZM, ZW.

(84) Designated States *(unless otherwise indicated, for every kind of regional protection available)*: ARIPO (BW, GH, GM, KE, LR, LS, MW, MZ, NA, RW, SD, SL, SZ, TZ, UG, ZM, ZW), Eurasian (AM, AZ, BY, KG, KZ, RU, TJ, TM), European (AL, AT, BE, BG, CH, CY, CZ, DE, DK, EE, ES, FI, FR, GB, GR, HR, HU, IE, IS, IT, LT, LU, LV, MC, MK, MT, NL, NO, PL, PT, RO, RS, SE, SI, SK, SM, TR), OAPI (BF, BJ, CF, CG, CI, CM, GA, GN, GQ, GW, ML, MR, NE, SN, TD, TG).

[Continued on next page]

(54) Title: AEROSOL GENERATING DEVICE WITH IMPROVED TEMPERATURE DISTRIBUTION

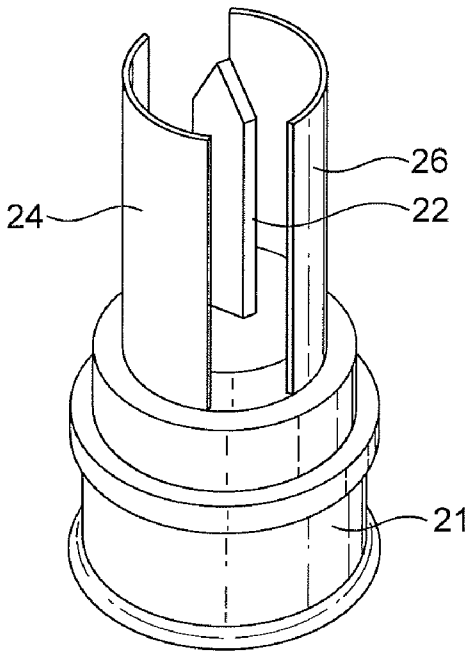

FIG. 3b

(57) Abstract: There is provided an aerosol generating device configured to receive an aerosol-forming substrate and configured to heat the aerosol-forming substrate using both an internal heater, positioned within the substrate, and an external heater positioned outside of the substrate. The use of both an internal and an external heater allows each heater to operate at a lower temperature than would be required when using either an internal or external heater alone. By operating the external heater at a lower temperature than the internal heater, the substrate can be heated to have a relatively uniform temperature distribution while the external temperature of the device can be kept to an acceptably low level.

WO 2013/098395 A1

Published:

— *with international search report (Art. 21(3))*

— *before the expiration of the time limit for amending the claims and to be republished in the event of receipt of amendments (Rule 48.2(h))*