(12) INTERNATIONAL APPLICATION PUBLISHED UNDER THE PATENT COOPERATION TREATY (PCT)

(19) World Intellectual Property Organization
International Bureau

(43) International Publication Date
31 July 2008 (31.07.2008)

PCT

(10) International Publication Number
WO 2008/090302 A1

(51) International Patent Classification:
F03B 13/18 (2006.01)

(21) International Application Number:
PCT/GB2007/004366

(22) International Filing Date:
13 November 2007 (13.11.2007)

(25) Filing Language: English

(26) Publication Language: English

(30) Priority Data:
0701384.0 25 January 2007 (25.01.2007) GB

(71) Applicant and
(72) Inventor: **SMITH, Alvin** [GB/GB]; Creek Cottage, Castle Road, Dartmouth, Devonshire TQ6 9DA (GB).

(81) Designated States *(unless otherwise indicated, for every kind of national protection available)*: AE, AG, AL, AM, AT, AU, AZ, BA, BB, BG, BH, BR, BW, BY, BZ, CA, CH, CN, CO, CR, CU, CZ, DE, DK, DM, DO, DZ, EC, EE, EG, ES, FI, GB, GD, GE, GH, GM, GT, HN, HR, HU, ID, IL, IN, IS, JP, KE, KG, KM, KN, KP, KR, KZ, LA, LC, LK, LR, LS, LT, LU, LY, MA, MD, ME, MG, MK, MN, MW, MX, MY, MZ, NA, NG, NI, NO, NZ, OM, PG, PH, PL, PT, RO, RS, RU, SC, SD, SE, SG, SK, SL, SM, SV, SY, TJ, TM, TN, TR, TT, TZ, UA, UG, US, UZ, VC, VN, ZA, ZM, ZW.

(84) Designated States *(unless otherwise indicated, for every kind of regional protection available)*: ARIPO (BW, GH, GM, KE, LS, MW, MZ, NA, SD, SL, SZ, TZ, UG, ZM, ZW), Eurasian (AM, AZ, BY, KG, KZ, MD, RU, TJ, TM), European (AT, BE, BG, CH, CY, CZ, DE, DK, EE, ES, FI, FR, GB, GR, HU, IE, IS, IT, LT, LU, LV, MC, MT, NL, PL, PT, RO, SE, SI, SK, TR), OAPI (BF, BJ, CF, CG, CI, CM, GA, GN, GQ, GW, ML, MR, NE, SN, TD, TG).

Published:
— *with international search report*

(54) **Title:** HYDRO COLUMN

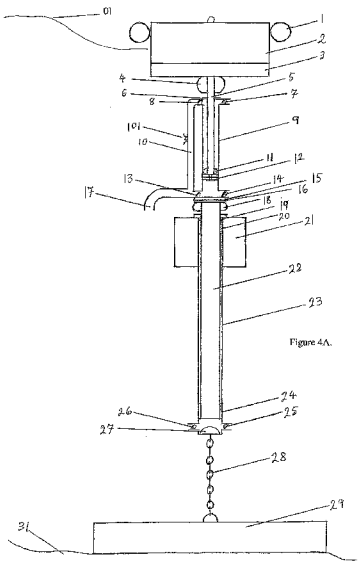

Figure 4A.

(57) **Abstract:** A Self Priming Gravity Wave Water Pump, Double Acting, vertically Self Adjusting incorporating a Submerged Column Platform as shown in Figure 4A, the submerged column platform (22) can be tethered (28) or secured by a pivot to a weight (29) or fixed into the water bed (31). The column (22) can be incorporated into an additional submerged water filled column chamber (23), to operate as a hydraulic tidal adjustable column platform. The Gravity Wave Pump (9) is a wave energy converter using wave energy in the form of wave motion to displace a float (2), to lift the pumps reciprocating piston (12) and uses gravity, causing a weight (3) to push a piston down as the wave passes. The pump could pressurise piped water to a head of up to 100 metres or more and could pump pressures in excess of 150 pounds per square inch when adjusted accordingly.

WO 2008/090302 A1