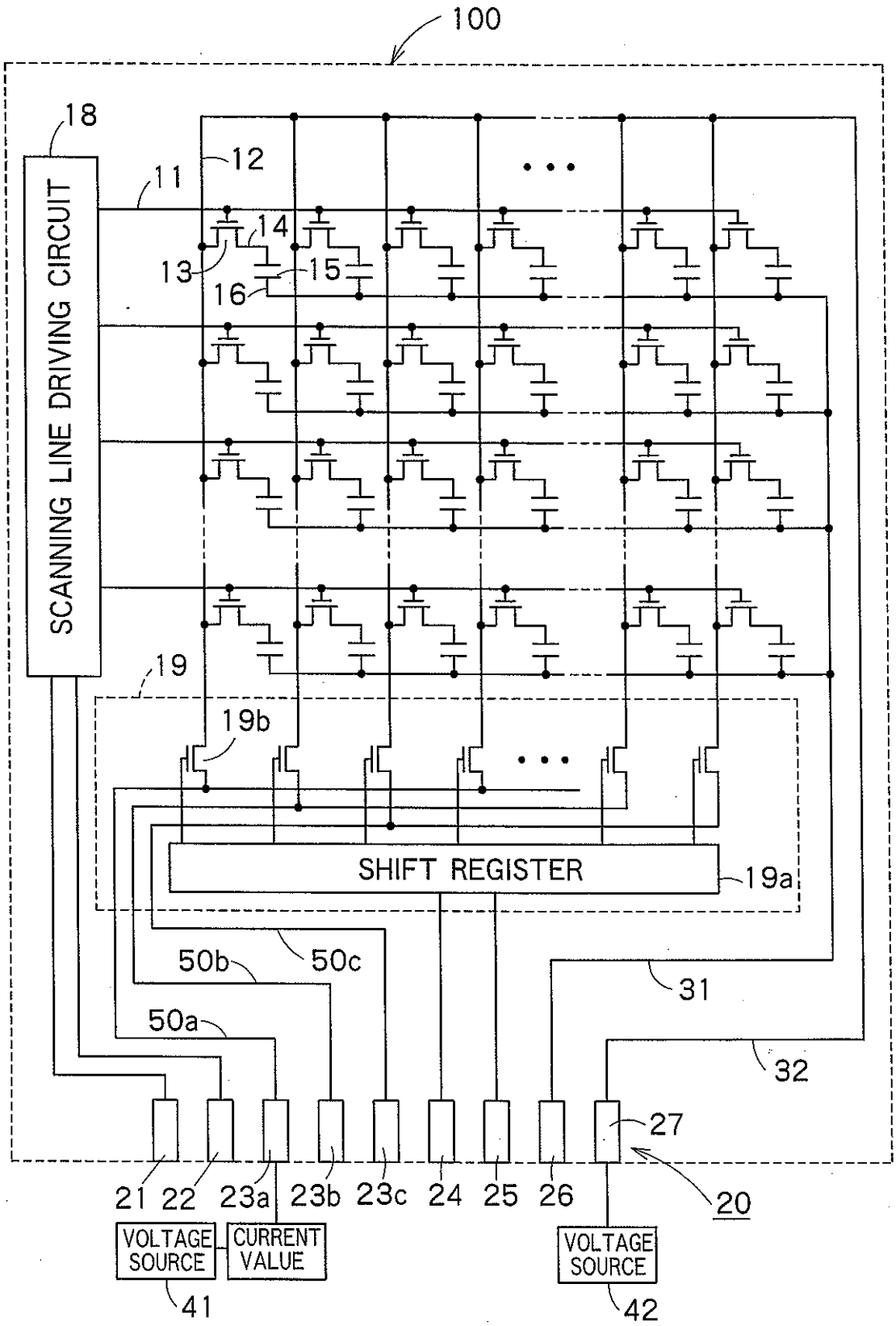
100
18
SCANNING LINE DRIVING CIRCUIT
11
12
13
14
15
16
19
19b
SHIFT REGISTER
19a
50b
50c
50a
31
32
27
20
21
22
23a
23b
23c
24
25
26
VOLTAGE SOURCE
CURRENT VALUE
41
VOLTAGE SOURCE
42

FIG. 1

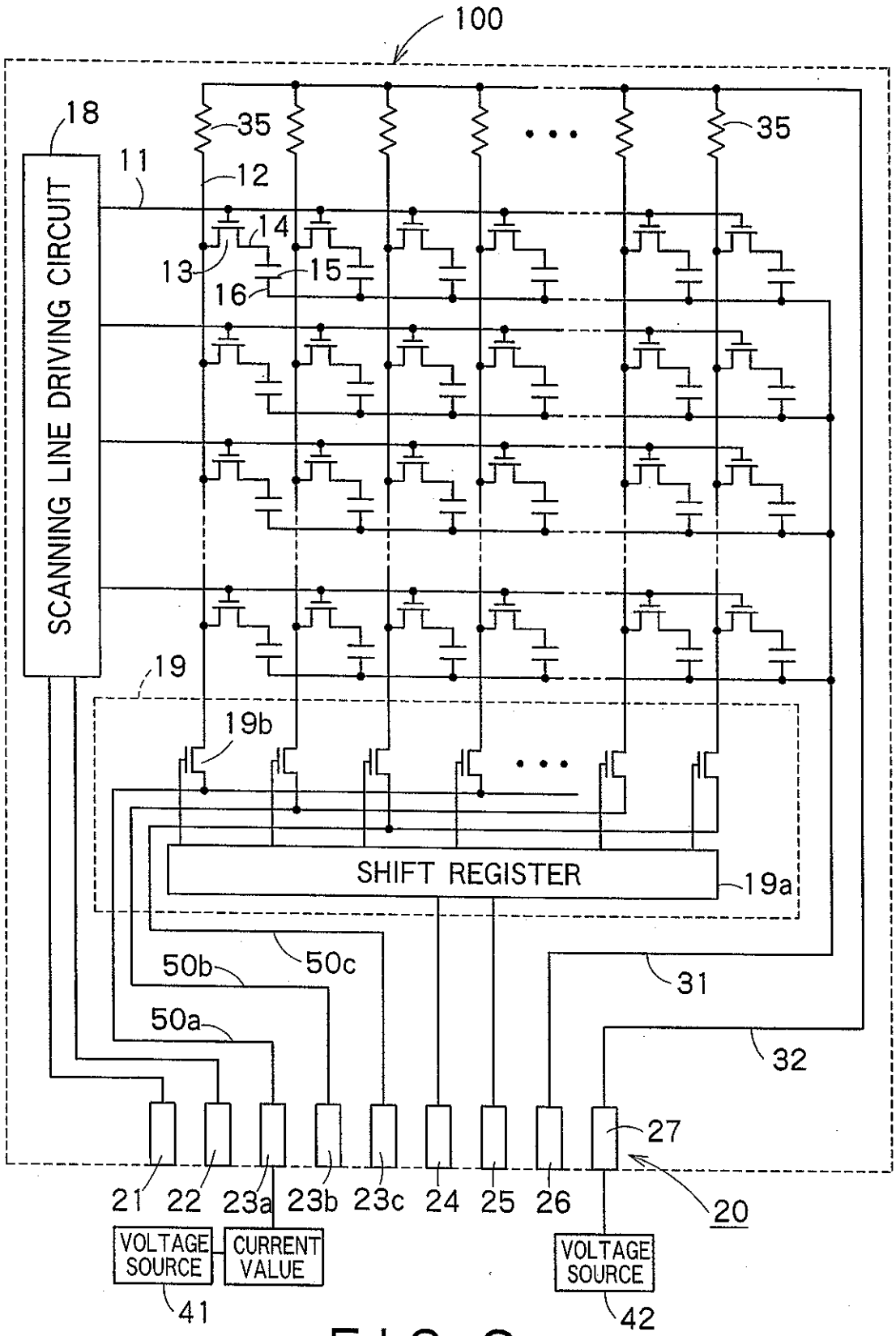
100
18
SCANNING LINE DRIVING CIRCUIT
11
35
12
14
13
15
16
19
19b
SHIFT REGISTER
19a
50b
50c
50a
31
32
27
20
21
22
23a
23b
23c
24
25
26
VOLTAGE SOURCE
CURRENT VALUE
41
VOLTAGE SOURCE
42

FIG. 2

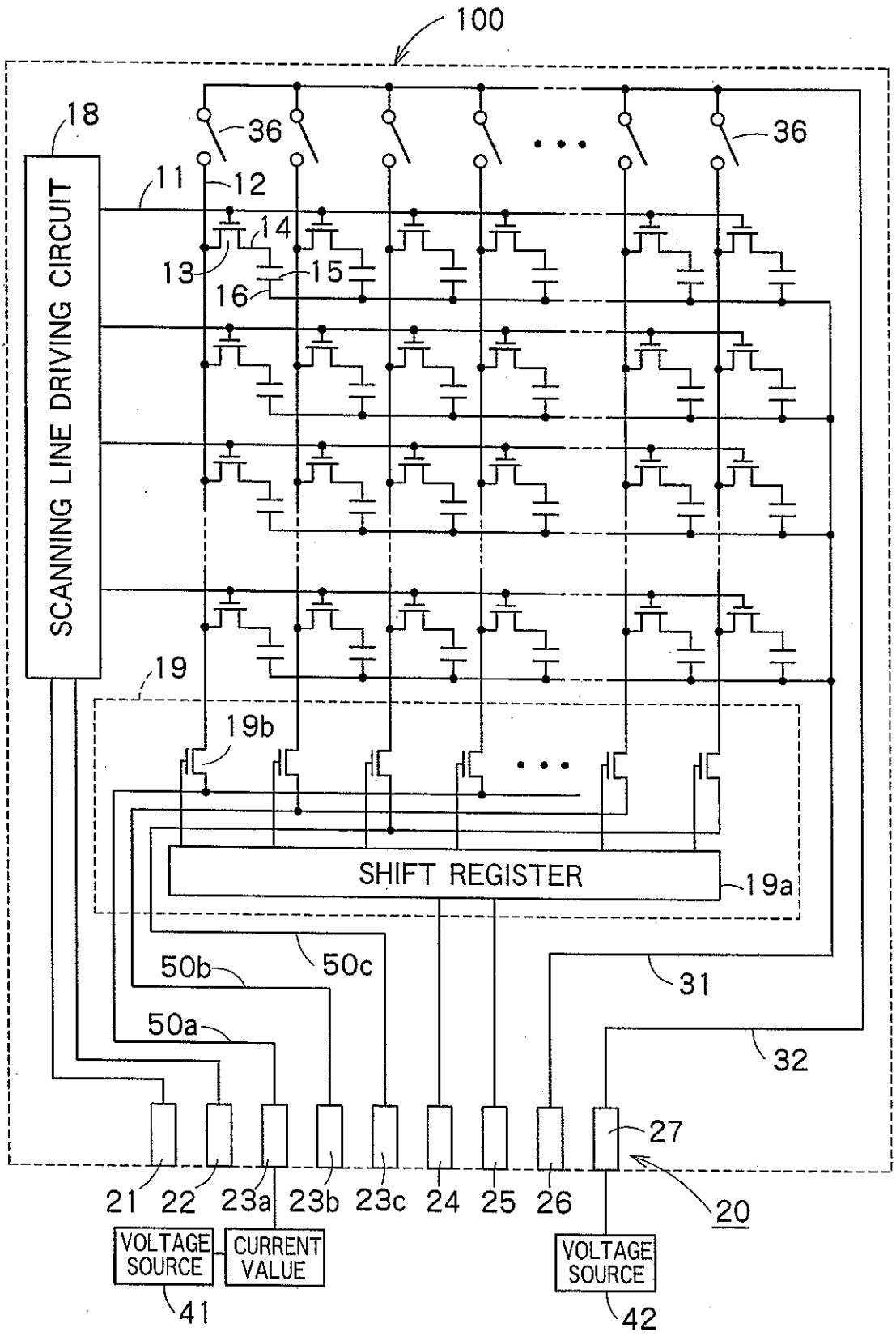
100
18
SCANNING LINE DRIVING CIRCUIT
36
36
11
12
14
13
15
16
19
19b
SHIFT REGISTER
19a
50b
50c
31
50a
32
27
21
22
23a
23b
23c
24
25
26
20
VOLTAGE SOURCE
CURRENT VALUE
41
VOLTAGE SOURCE
42

FIG. 3

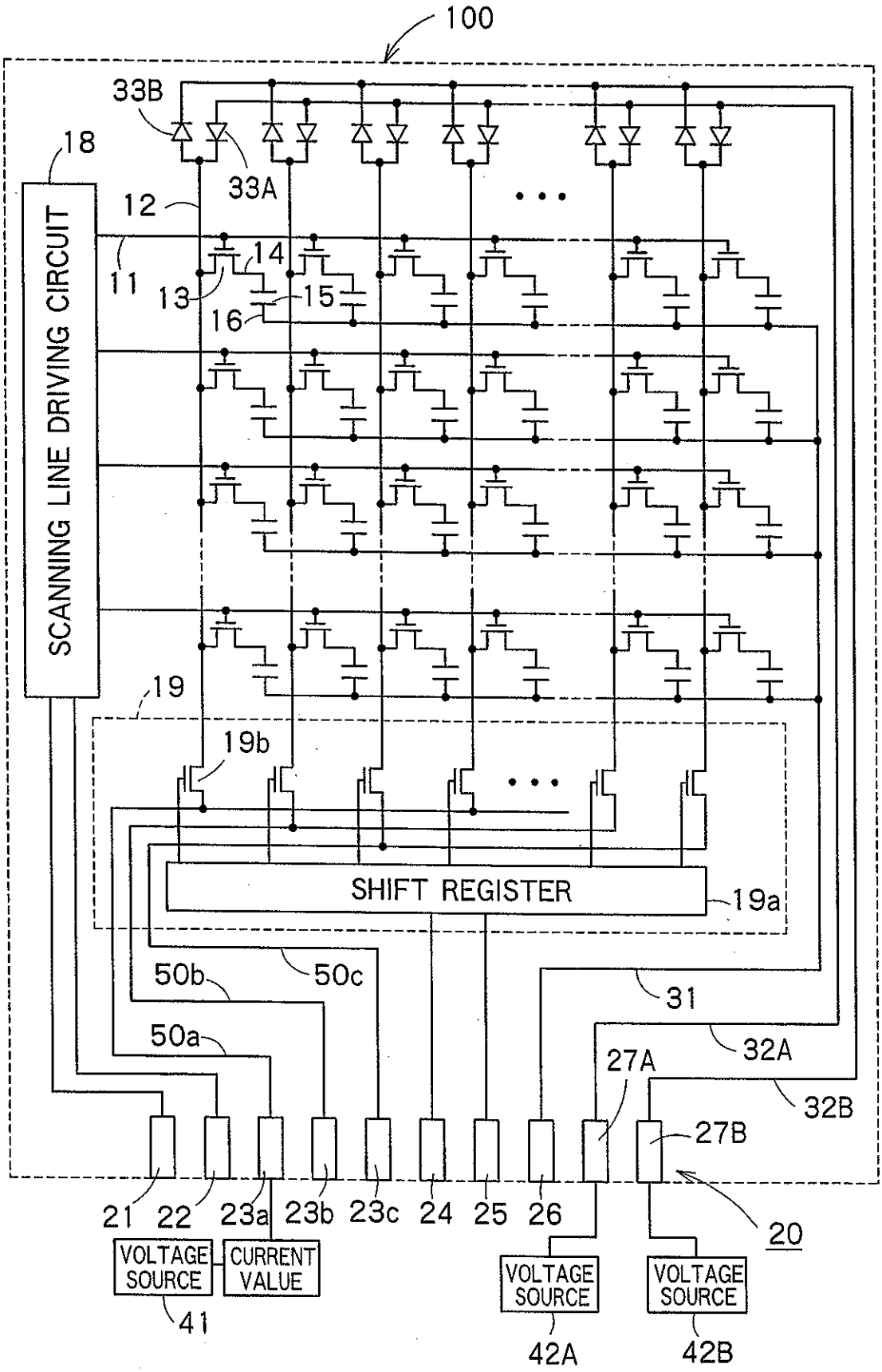
100
33B
33A
18
12
11
13
14
15
16
SCANNING LINE DRIVING CIRCUIT
19
19b
SHIFT REGISTER
19a
50b
50c
50a
31
32A
32B
27A
27B
20
21
22
23a
23b
23c
24
25
26
VOLTAGE SOURCE
CURRENT VALUE
41
VOLTAGE SOURCE
42A
VOLTAGE SOURCE
42B

FIG. 4

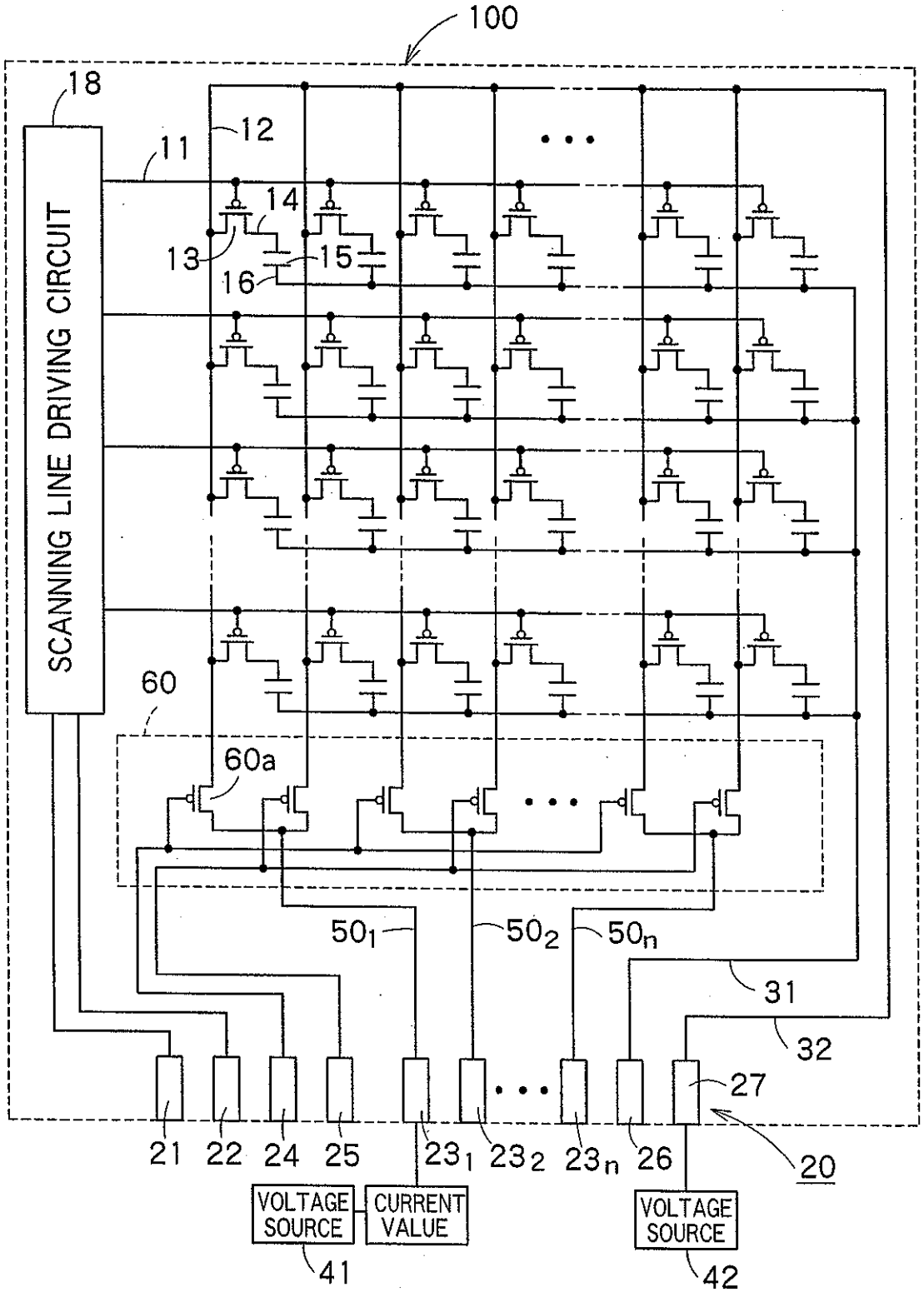
100
18
SCANNING LINE DRIVING CIRCUIT
11
12
13
14
15
16
60
60a
50_1
50_2
50_n
31
32
27
20
21
22
24
25
23_1
23_2
23_n
26
VOLTAGE SOURCE
CURRENT VALUE
41
VOLTAGE SOURCE
42

FIG. 5

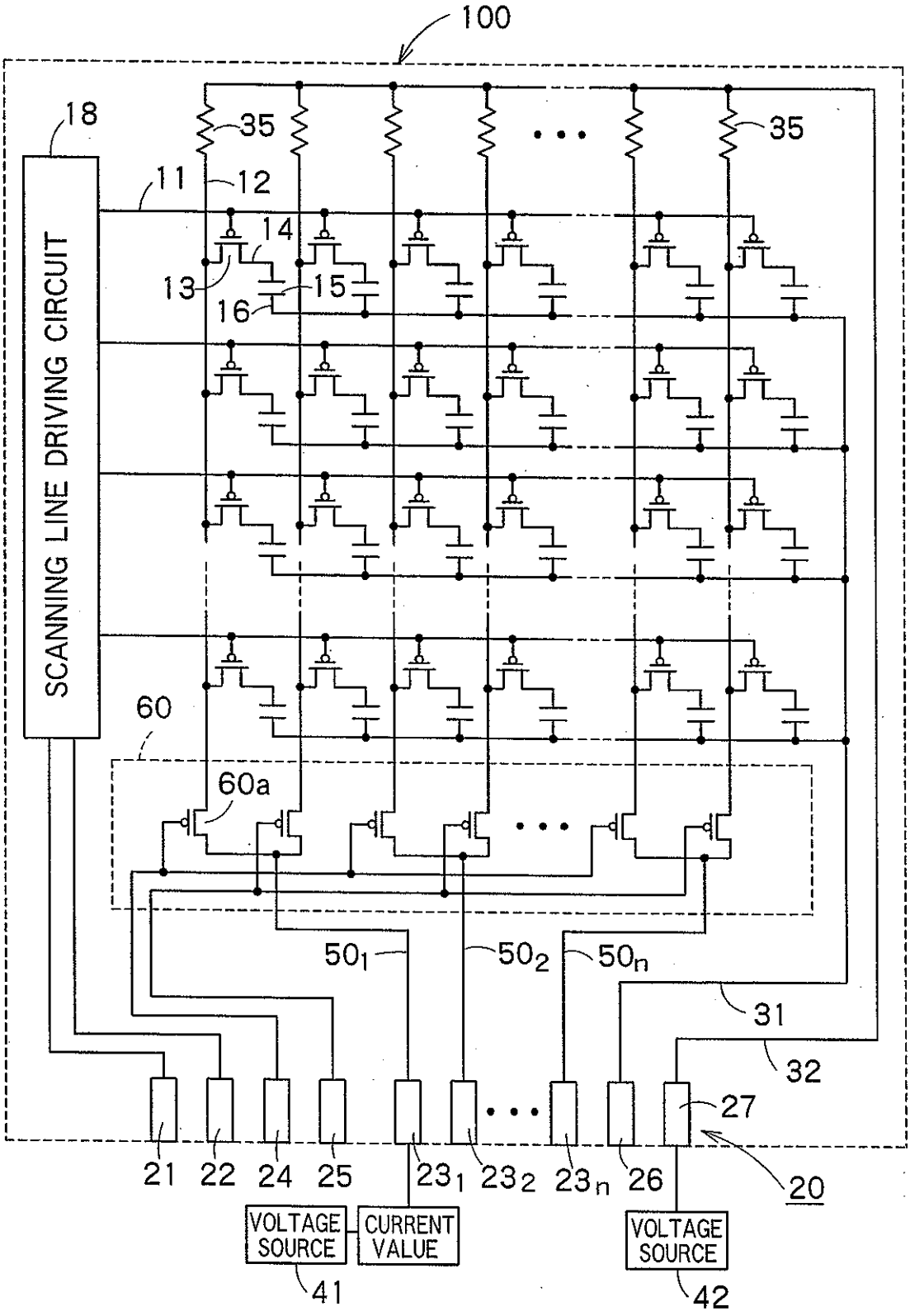
100
18
SCANNING LINE DRIVING CIRCUIT
35
35
11
12
14
13
15
16
60
60a
50_1
50_2
50_n
31
32
27
20
21
22
24
25
23_1
23_2
23_n
26
VOLTAGE SOURCE
CURRENT VALUE
VOLTAGE SOURCE
41
42

FIG. 6

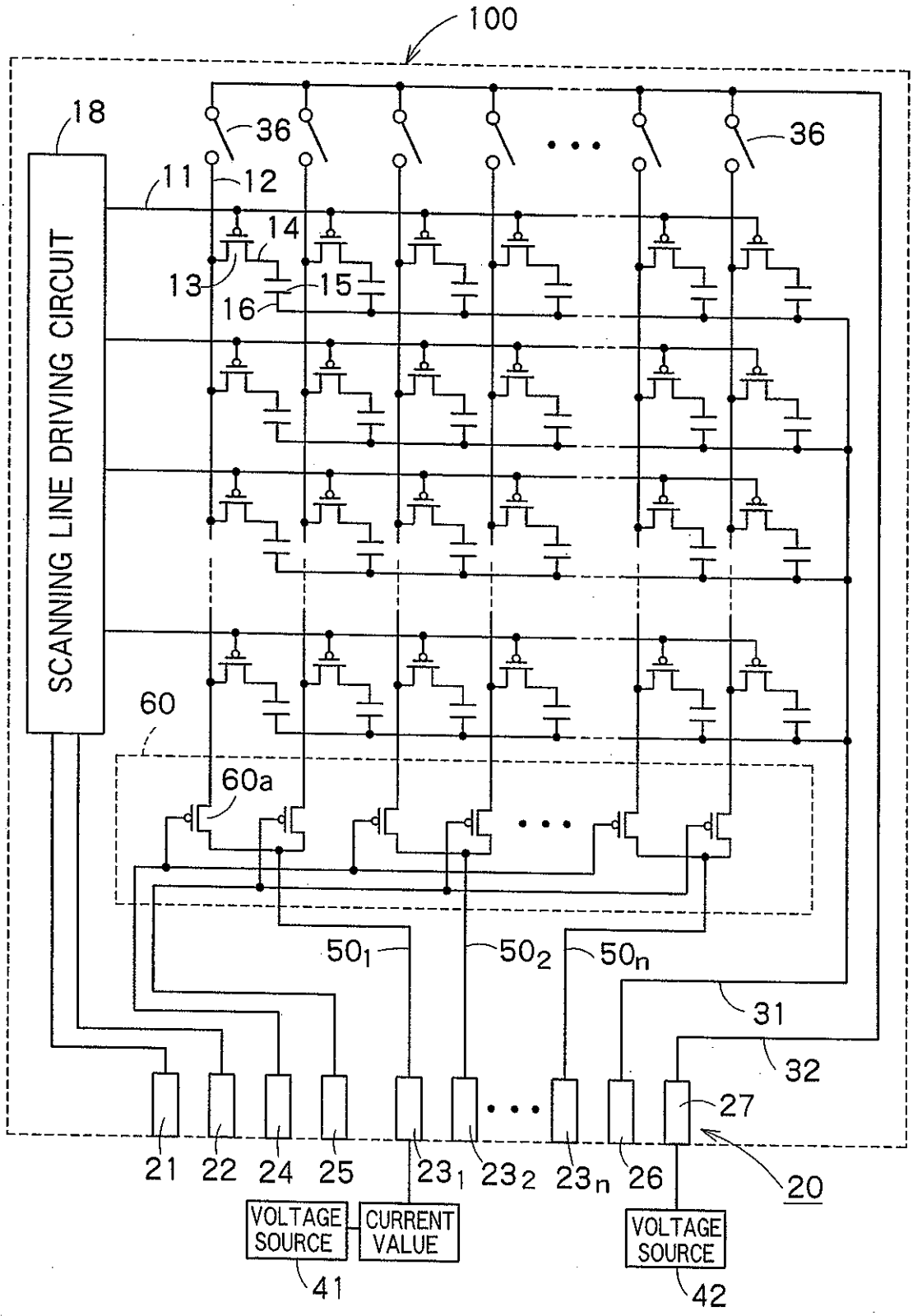
100
18
SCANNING LINE DRIVING CIRCUIT
36
36
11
12
14
13
15
16
60
60a
50_1
50_2
50_n
31
32
27
20
21
22
24
25
23_1
23_2
23_n
26
VOLTAGE SOURCE
CURRENT VALUE
41
VOLTAGE SOURCE
42

FIG. 7

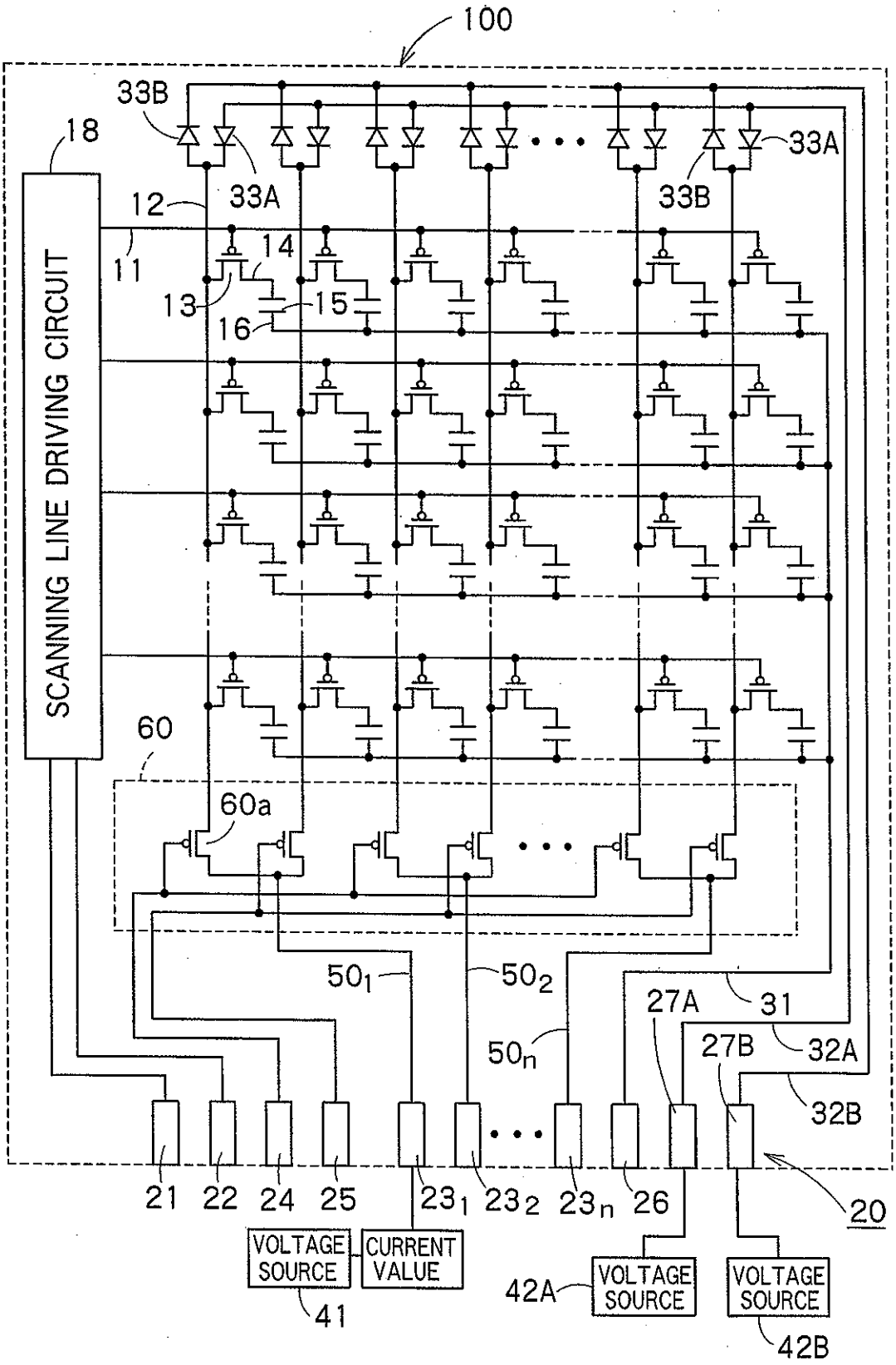
100
33B
18
33A
12
33A
33B
11
14
13
15
16
SCANNING LINE DRIVING CIRCUIT
60
60a
50_1
50_2
50_n
27A
31
27B
32A
32B
21
22
24
25
23_1
23_2
23_n
26
20
VOLTAGE SOURCE
CURRENT VALUE
41
42A
VOLTAGE SOURCE
VOLTAGE SOURCE
42B

FIG. 8

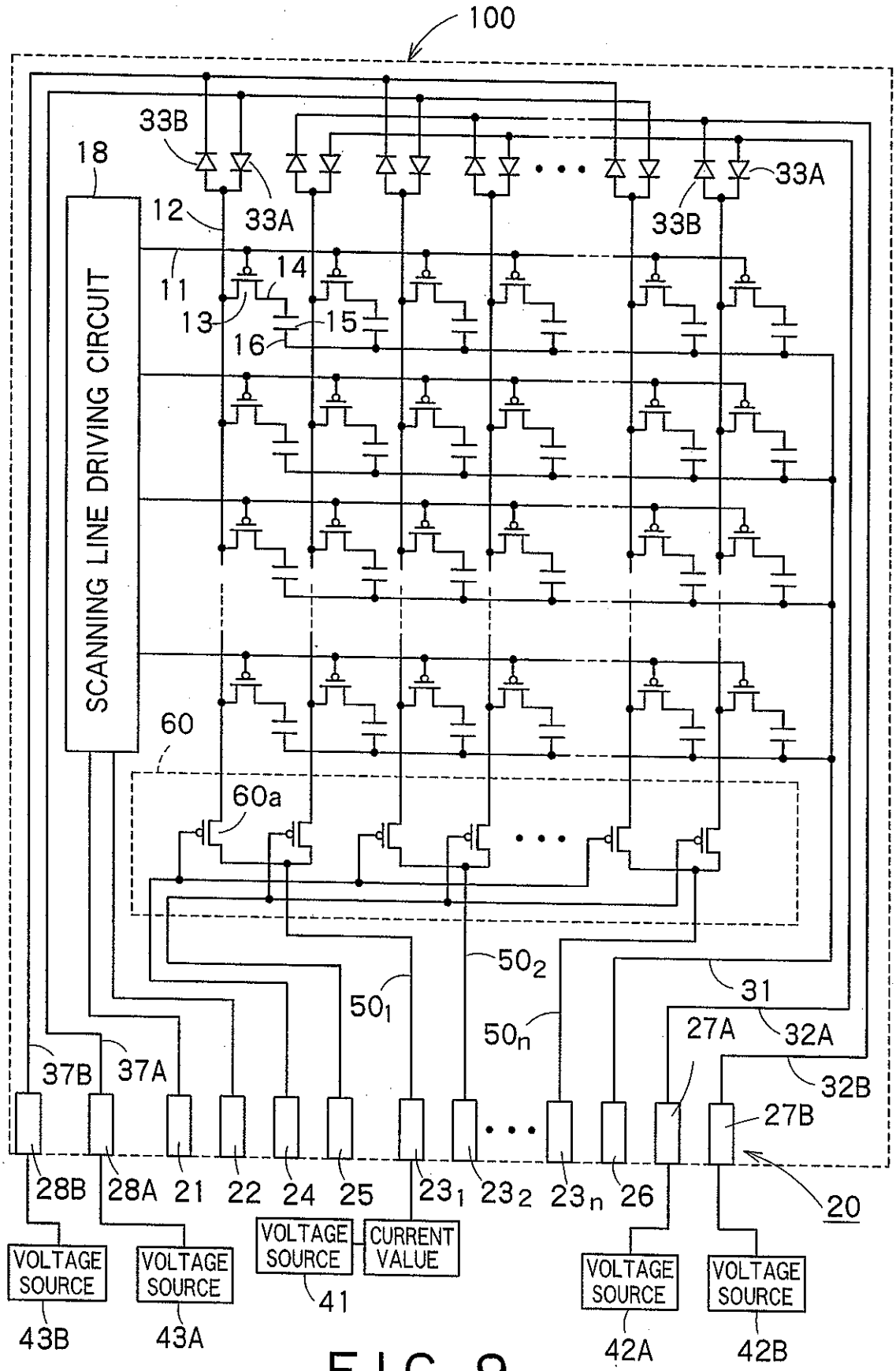
100
33B
18
33A
12
33A
33B
11
14
13
15
16
SCANNING LINE DRIVING CIRCUIT
60
60a
50_2
50_1
50_n
31
27A
32A
37B
37A
32B
27B
28B
28A
21
22
24
25
23_1
23_2
23_n
26
20
VOLTAGE SOURCE
VOLTAGE SOURCE
VOLTAGE SOURCE
CURRENT VALUE
41
VOLTAGE SOURCE
VOLTAGE SOURCE
43B
43A
42A
42B

FIG. 9

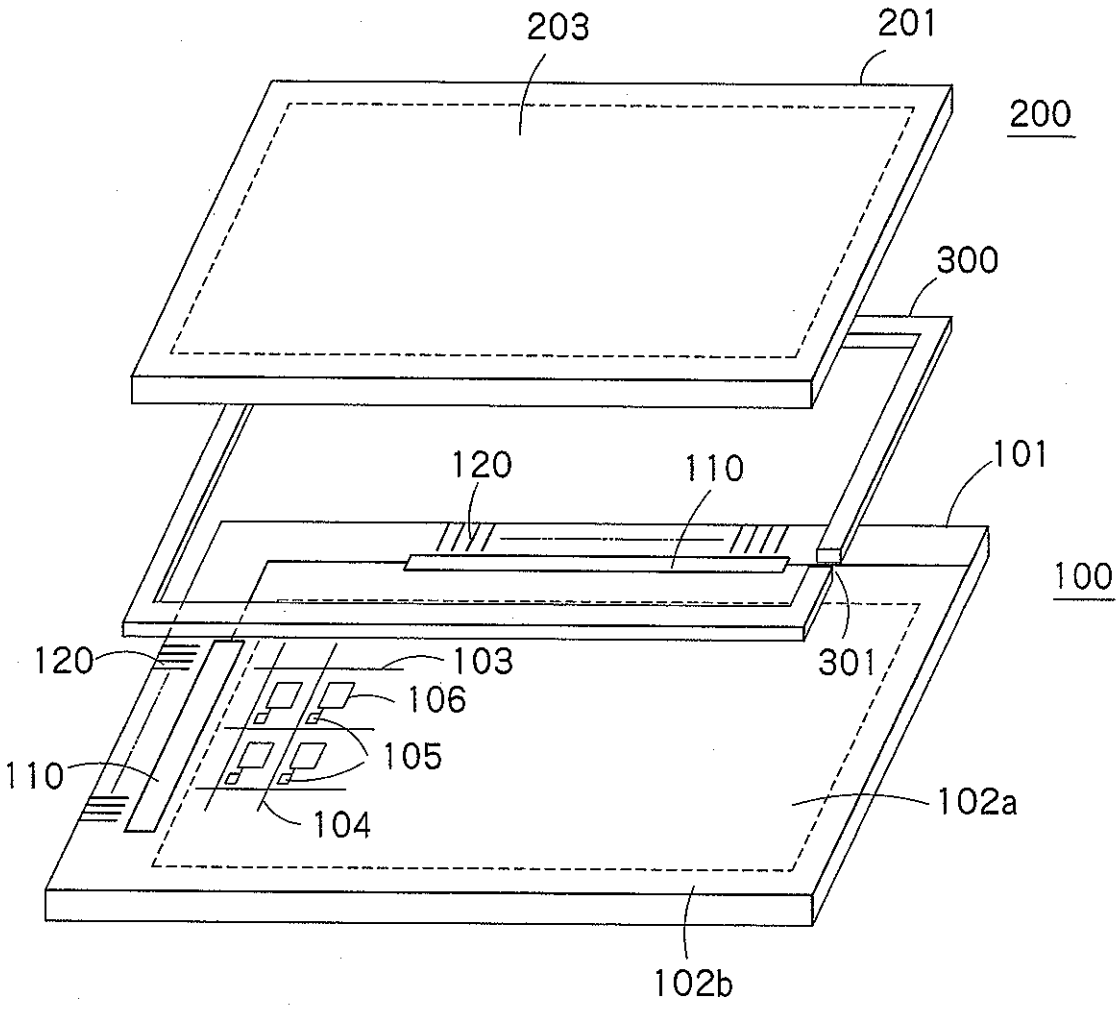
203
201
200
300
120
110
101
100
120
103
106
105
110
104
301
102a
102b

FIG. 10

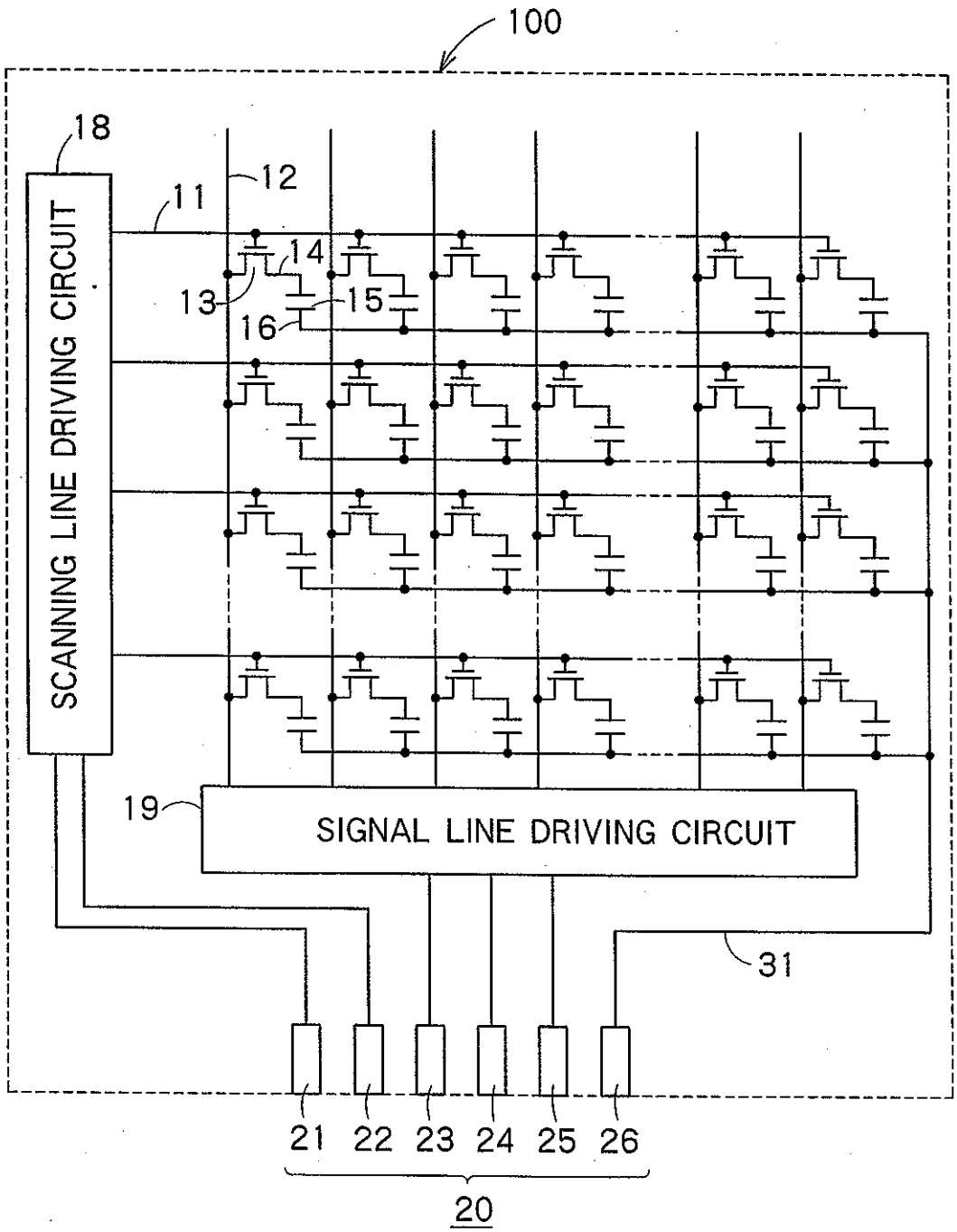
100
18
SCANNING LINE DRIVING CIRCUIT
11
12
13
14
15
16
19
SIGNAL LINE DRIVING CIRCUIT
31
21
22
23
24
25
26
20

FIG. 11

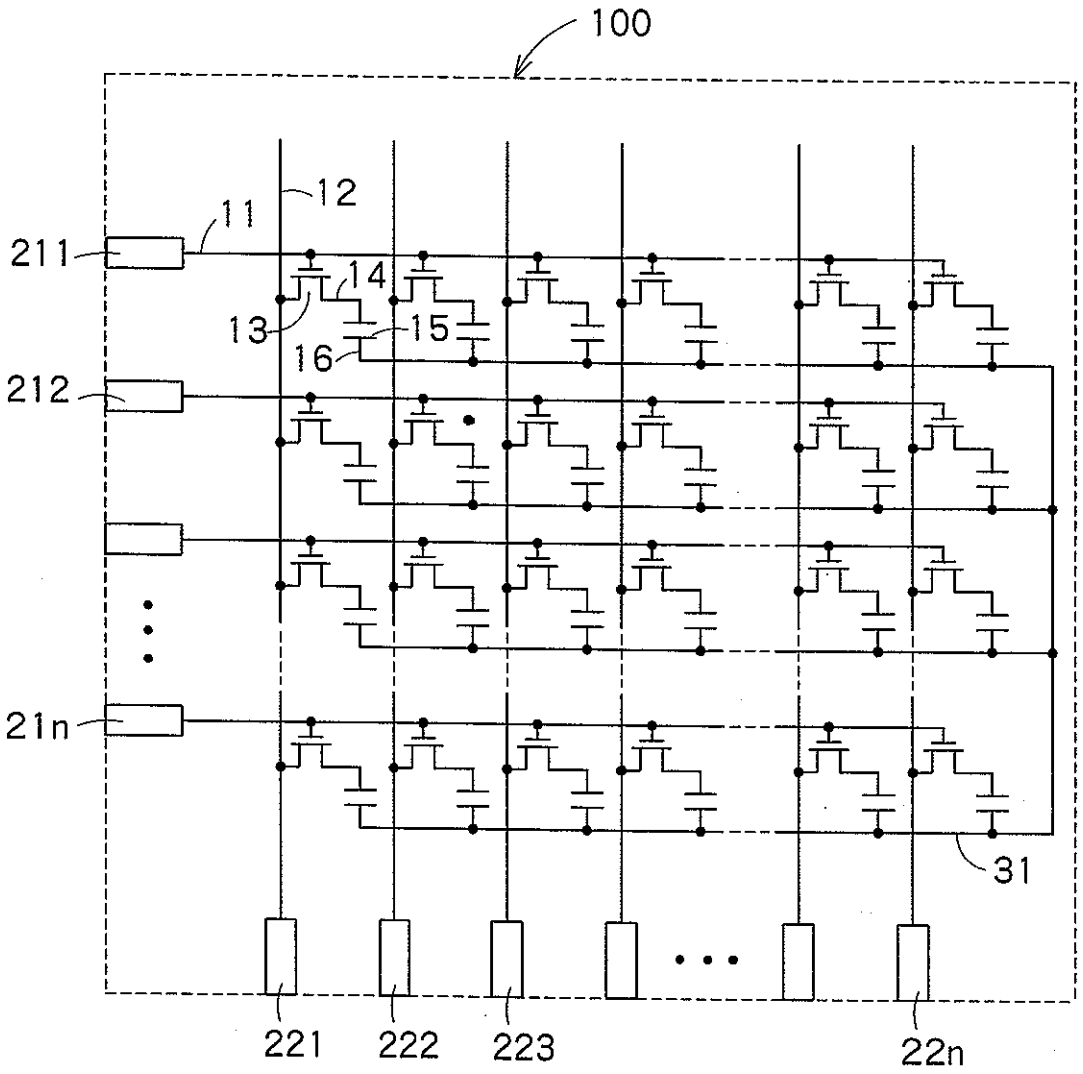

FIG. 12